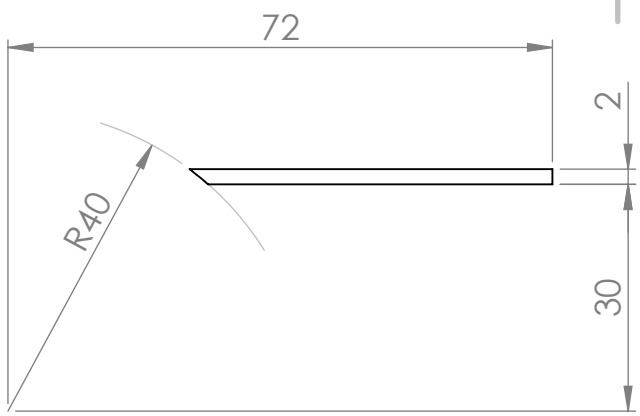

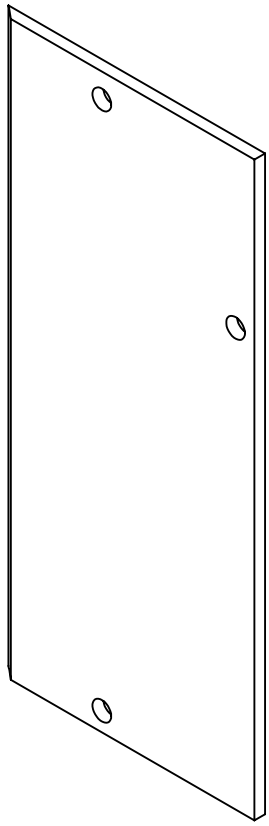

ISOMETRIC VIEW

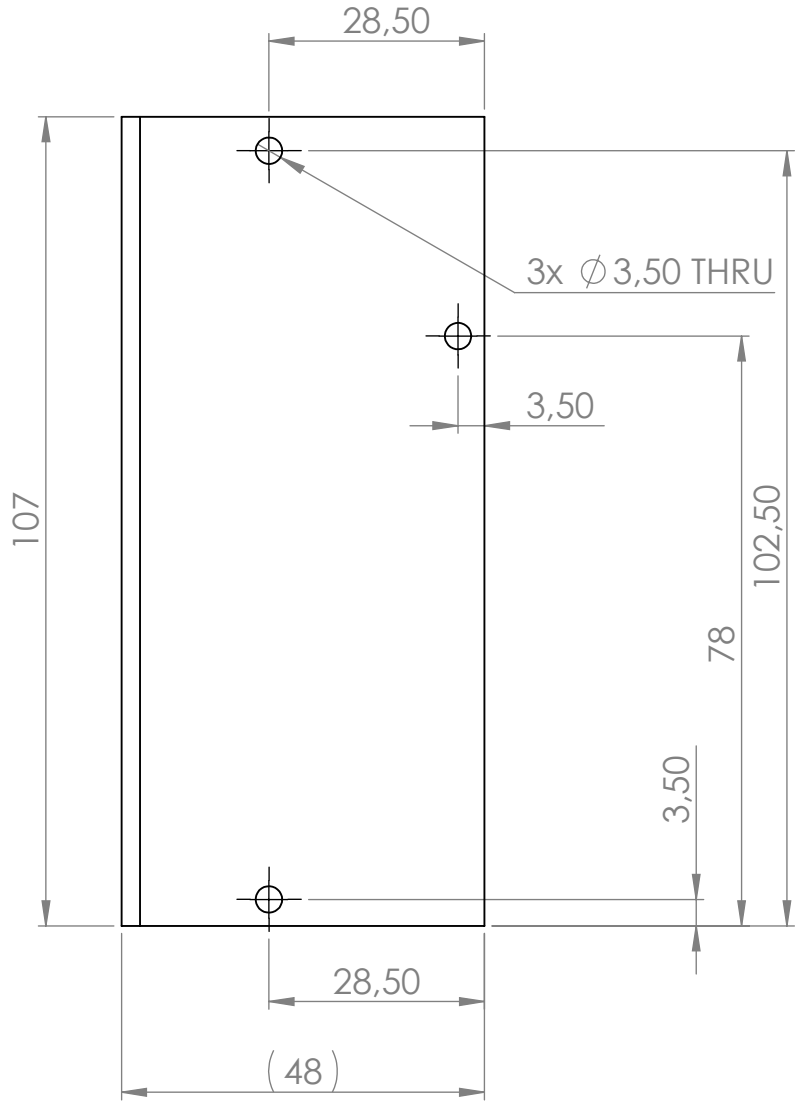

THIRD ANGLE PROJECTION

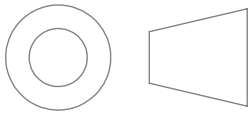

UNLESS OTHERWISE SPECIFIED:
DIMENSIONS ARE IN MILLIMETERS
SURFACE FINISH:
TOLERANCES:
LINEAR: +-0.2 mm
ANGULAR: +-0.5 deg

FINISH:

DEBURR AND BREAK SHARP EDGES

DO NOT SCALE DRAWING

REVISION

Open Cosmos Ltd.

	NAME	SIGNATURE	DATE
DRAWN	Jordi Barrera Ars		16-06-16
CHK'D			
APPV'D			
MFG			
Q.A			

TITLE:

Deployer_3_Main_electronics_box_wall_right

MATERIAL:

Acrylic

WEIGHT:

DWG NO.

v1

A4

SCALE:1:1

SHEET 1 OF 1