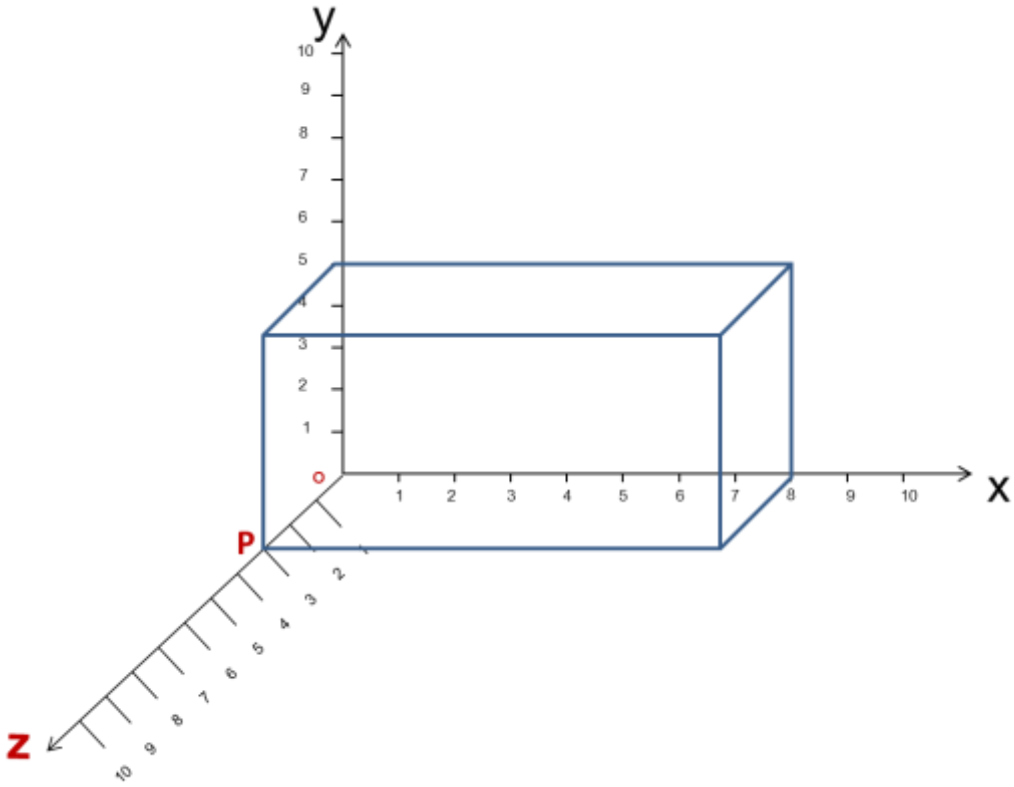

What are the co-ordinates of point P?