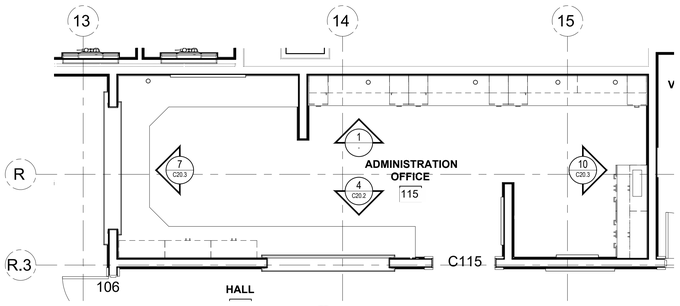

0 KEY PLAN
1/A4.02 1/4"=1'-0"

TYPICAL NOTES:
1. ARCHITECTURAL MILLWORK IS SENSITIVE TO ENVIRONMENTAL CONDITIONS. THE INSTALLATION SITE SHOULD MAINTAIN A RELATIVE HUMIDITY BETWEEN 25% AND 55%, AND A TEMPERATURE BETWEEN 60 - 80 DEGREES. EXTREME CHANGE IN OR FAILURE TO MAINTAIN THE SPECIFIED CONDITIONS CAN CAUSE CHECKING OF THE FINISH, SWELLING, SHRINKING OR WARPING OF WOOD AND WILL VOID THE WARRANTY.
2. FETZER WILL NOT BE RESPONSIBLE FOR ANY WORK BY OTHER TRADES BASED ON THIS DRAWING.
3. ALL CONCEALED AND IN-WALL BLOCKING BY OTHERS.
4. ALL PLUMBING FIXTURES FURNISHED AND INSTALLED BY OTHERS.
5. ALL ELECTRICAL, AV, AND IT BY OTHERS.
6. ALL ADJACENT CONSTRUCTION SURFACES MUST BE BUILT PLUMB, LEVEL, STRAIGHT, AND TRUE WITHIN THE AWI STANDARDS FOR MILLWORK AND CASEWORK.

SHOP NOTES:
1. DRAWER BOXES TO BE .625" THICK MELAMINE SIDES WITH DOWEL CONSTRUCTION.

HARDWARE SCHEDULE -- 2502002C99

TAG	QTY	UNITS	DESCRIPTION	ID	LSE
H-1	15	EA	BLUM 73B3590 SOFT CLOSE HINGE* FULL OVERLAY - INSERTA 110+	0501960	
H-2	28	EA	BLUM 174H7100 MOUNTING PLATE 0MM* INSERTA	0502424	X
H-3	56	EA	BANBRIDGE 32201 DUAL PEG SHELF SUPPORT* CLEAR - .187S* SIDE SET FOR ADJ SHELVES - LOU&COM BA3220CL-62	0503623	
H-4	15	EA	SCHAUB EMPIRE 884-S08 9" CTC TRAD GRAND* HANDLE CABINET PULL - SIGNATURE SATIN BRASS FINISH LOU&COM ZSCH884-S08	0503951	
H-5	6	SETS	ACCURIDE C3135-21ECD 21" UNDERMOUNT* SLIDES - INCLUDES DISCONNECT LEVERS AND ASSEMBLY SCREWS - HAFELE# 433.29.907	0502792	
H-9	5	EA	BLUM 71T6540B SELF CLOSE HINGE* 170 DEG STRAIGHT ARM INSERTA	0501696	
H-10	5	EA	BLUM 073A6000 BLUMOTION* USE WITH 170 DEG STRAIGHT ARM AND HALF CRANK HINGE	0501374	
H-20	2	EA	EPCO 1018-S ELBOW CATCH BRASS	0502005	
H-22	1	PRS	ACCURIDE C3640 DRAWER SLIDE 20" ZC* HAFELE# 422.07.509 - SIDE SPACING: .92" PER SIDE	0501923	
H-23	4	EA	HAFELE 424.31.910 TOP MOUNT BRACKET* FILE HANGING SYSTEM ZINC-PLATED	0503654	
H-24	0	EA	FUTURA 1004EA ALUM BAR 1/8" X 1" X 144" 6 PCS PER CARTON	0500495	
H-25	3	EA	OLYMPUS WP20 SPACER 3/16" WHITE* LOU&COM ZOLWP20	0503720	
H-26	3	EA	OLYMPUS WP22 SPACER 1/4" WHITE* LOU&COM OLWP22	0502116	
H-28	4	EA	OLYMPUS LOCK 100DR .937S* BARREL US4* FINISH - KEY 2AA	C2502002103	
H-29	3	EA	OLYMPUS LOCK 200DW 1.375* BARREL US4* FINISH - KEY 2AA	C2502002104	

HARDWARE SCHEDULE -- 2502002C21

TAG	QTY	UNITS	DESCRIPTION	ID	LSE
H-1	57	EA	BLUM 73B3590 SOFT CLOSE HINGE* FULL OVERLAY - INSERTA 110+	0501960	
H-2	60	EA	BLUM 174H7100 MOUNTING PLATE 0MM* INSERTA	0502424	
H-3	156	EA	BANBRIDGE 32201 DUAL PEG SHELF SUPPORT* CLEAR - .187S* SIDE SET FOR ADJ SHELVES - LOU&COM BA3220CL-62	0503623	X
H-4	20	EA	SCHAUB EMPIRE 884-S08 9" CTC TRAD GRAND* HANDLE CABINET PULL - SIGNATURE SATIN BRASS FINISH LOU&COM ZSCH884-S08	0503951	
H-9	3	EA	BLUM 71T6540B SELF CLOSE HINGE* 170 DEG STRAIGHT ARM INSERTA	0501696	
H-10	3	EA	BLUM 073A6000 BLUMOTION* USE WITH 170 DEG STRAIGHT ARM AND HALF CRANK HINGE	0501374	
H-20	9	EA	EPCO 1018-S ELBOW CATCH BRASS	0502005	
H-27	6	EA	OLYMPUS 12-1 ANGLED STRIKE US26D	0503767	
H-28	13	EA	OLYMPUS LOCK 100DR .937S* BARREL US4* FINISH - KEY 2AA	C2502002103	

REVISION SCHEDULE -- 2502002C20

TAG	DATE	DESCRIPTION
1	9/2/2025	UPDATED PER RETURN REDLINE SUBMITTAL #095 ARCHITECTURAL CASEWORK
2	9/18/2025	UPDATED PER RFI 114 UPDATED STILES, RAILS AND DRAWER FRONTS - CT
3	11/7/2025	UPDATED TO ADDED MOOK-UP WO C99 PER ISAAC WILSON - BG
4	12/30/2025	UPDATED PER STILE & RAIL REVISION - SKZ
5	1/16/2026	UPDATED PER RFI 196 - MB
6	1/23/2026	UPDATED PER RFI 43 - SKZ

HARDWARE SCHEDULE -- 2502002C20

TAG	QTY	UNITS	DESCRIPTION	ID	LSE
H-1	4	EA	BLUM 73B3590 SOFT CLOSE HINGE* FULL OVERLAY - INSERTA 110+	0501960	
H-2	4	EA	BLUM 174H7100 MOUNTING PLATE 0MM* INSERTA	0502424	
H-3	16	EA	BANBRIDGE 32201 DUAL PEG SHELF SUPPORT* CLEAR - .187S* SIDE SET FOR ADJ SHELVES - LOU&COM BA3220CL-62	0503623	X
H-4	36	EA	SCHAUB EMPIRE 884-S08 9" CTC TRAD GRAND* HANDLE CABINET PULL - SIGNATURE SATIN BRASS FINISH LOU&COM ZSCH884-S08	0503951	
H-5	12	SETS	ACCURIDE C3135-21ECD 21" UNDERMOUNT* SLIDES - INCLUDES DISCONNECT LEVERS AND ASSEMBLY SCREWS - HAFELE# 433.29.907	0502792	
H-8	8	EA	MOCKETT EDP3-90 GROMMET 2.5" SET* EDP3 GROMMET CAP AND LINER SET FITS INTO A 2 1/2" HOLE. SET INCLUDES EDP1 LINER AND EDP2 CAP WITH CORD SLOT. CAP FEATURES FLIP-TOP TIPS TAB WHICH CLOSES AND COVERS CORD SLOT WHEN EDP3 IS NOT IN USE. BLACK FINISH.	0505043	X
H-22	22	PRS	ACCURIDE C3640 DRAWER SLIDE 20" ZC* HAFELE# 422.07.509 - SIDE SPACING: .92" PER SIDE	0501923	
H-23	88	EA	HAFELE 424.31.910 TOP MOUNT BRACKET* FILE HANGING SYSTEM ZINC-PLATED	0503654	
H-24	1	EA	FUTURA 1004EA ALUM BAR 1/8" X 1" X 144" 6 PCS PER CARTON	0500495	
H-25	31	EA	OLYMPUS WP20 SPACER 3/16" WHITE* LOU&COM ZOLWP20	0503720	
H-26	31	EA	OLYMPUS WP22 SPACER 1/4" WHITE* LOU&COM OLWP22	0502116	
H-27	2	EA	OLYMPUS 12-1 ANGLED STRIKE US26D	0503767	
H-29	31	EA	OLYMPUS LOCK 200DW 1.375* BARREL US4* FINISH - KEY 2AA	C2502002104	
H-31	3	EA	OLYMPUS WP72S SPACER 1/8" WHITE	0504248	
H-32	3	EA	CUSTOM LOCK STRIKE PLATE PIS S-C36.1* STEEL - POWDER COATED BLACK (PREVIOUSLY P/N C2502004144)	0504246	
H-84	2	EA	OLYMPUS LOCK 100DR .937S* BARREL US4* FINISH - EXTENDED BOLT - KEY 2AA	C2502002749	
H-111	3	EA	OLYMPUS LOCK 725RD 1.062S BARREL US4 SATIN BRASS FINISH - KEYED ALIKE 1AA	C2502002839	

FINISH SCHEDULE -- 2502002C20

TAG	NAUF	FSC	DESCRIPTION
ML-1			WHITE MELAMINE
WD-1			QUARTER SLICED SAPELE VENEER SLIP AND CENTER BALANCE MATCH, WITH MIXED GRAIN SAPELE SOLIDS TO MATCH APPROVED SAMPLE

EDGE BAND SCHEDULE -- 2502002C20

Tag	NAUF	FSC	DESCRIPTION	DOOR	CAB	SHELF	DRWR	PANEL
EB-1			.020 WOOD TAPE TO MATCH WD-1, SAPELE, QUARTER SAWN					X
EB-2			.5MM PVC TAPE COLOR TO MATCH ML-1				X	
EB-4			.5MM PVC TAPE - ESI 517 FRUITWOOD (TO MATCH WD-1) FETZER PART #0504314		X	X		

WORK ORDER TABLE 2502002C20

CC	DESCRIPTION	FLOOR	AREA	ROOM
C20	115 ADMIN OFFICE BASE CABS WD1			115
C21	115 ADMIN OFFICE UPPER CABS WD1			115

WORK ORDER TABLE 2502002C20

CC	DESCRIPTION	FLOOR	AREA	ROOM
C20	115 ADMIN OFFICE BASE CASEWORK WD1	LEVEL 1	Q2	115
C21	115 ADMIN OFFICE UPPER CASEWORK WD1	LEVEL 1	Q2	115
C99	CASEWORK MOCKUP WD1	LEVEL 1	Q2	115

HARDWARE SCHEDULE -- 2502002BRK (DRW C20 ONLY)

TAG	QTY	UNITS	DESCRIPTION	ID	LSE
H-12	4	EA	A&M C-24K2.(I) CONCEALED BRACKETS* BLACK - 2 EACH PER BOX	0504240	X
H-13	5	EA	A&M EC-24Z.(I) EXTENDED CONCEALED* BRACKETS - BLACK - 2 EACH PER BOX	0504241	X

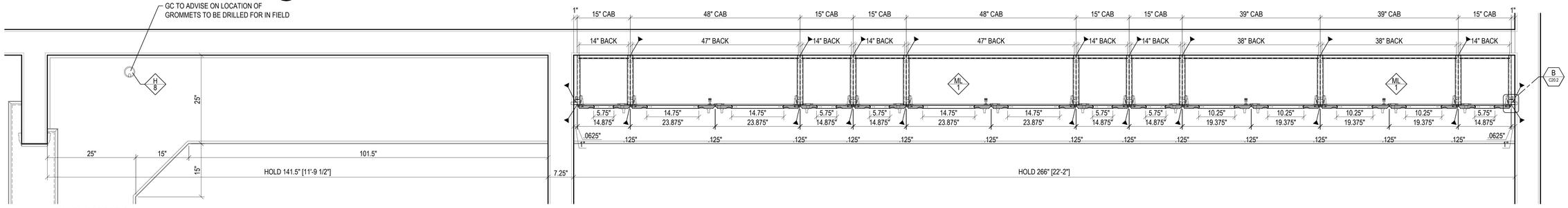

3 PLAN SECTION
1"=1'-0"

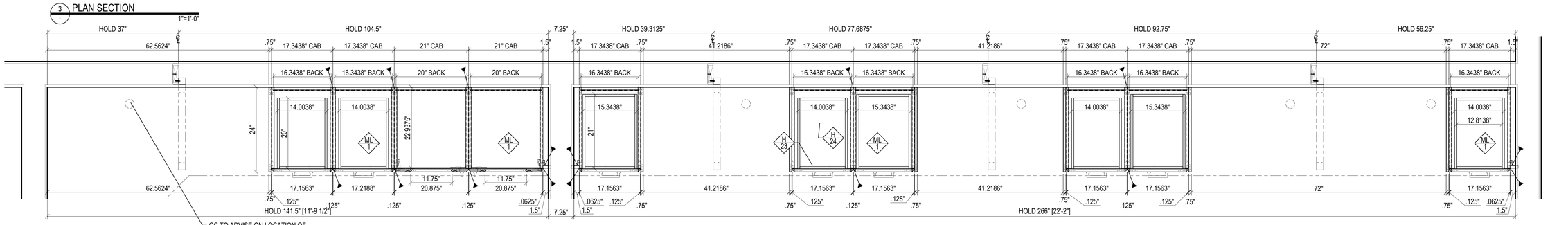

2 PLAN SECTION
1"=1'-0"

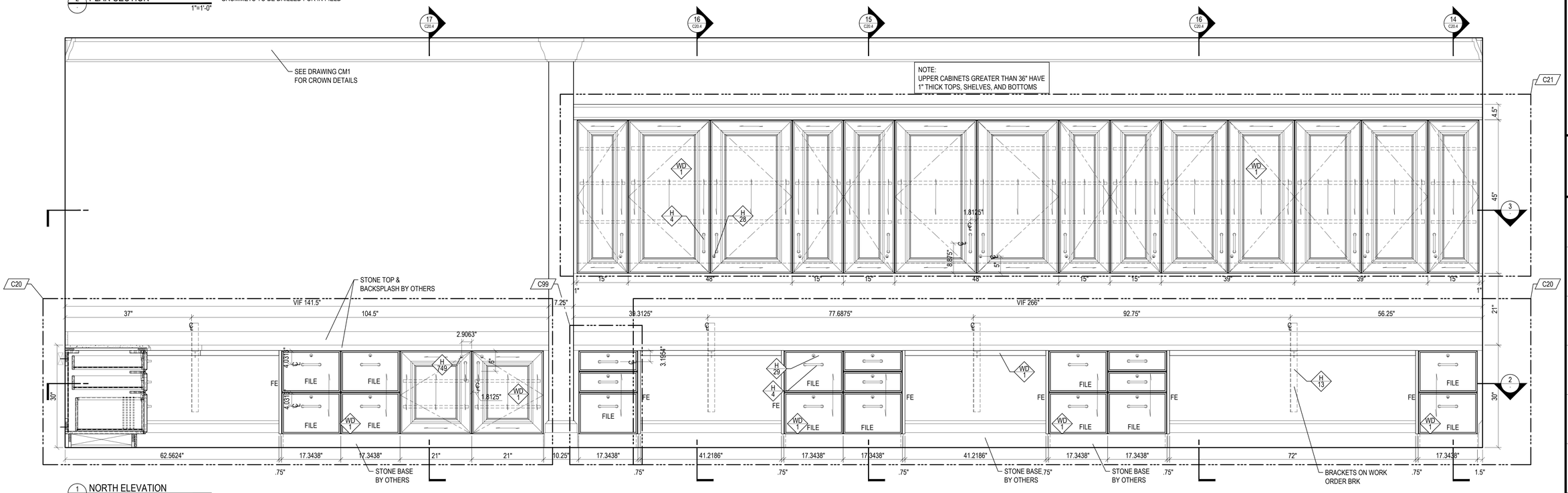

1 NORTH ELEVATION
13/A8.12 1"=1'-0"

FETZER ARCHITECTURAL WOODWORK

PROJECT:
LONE MOUNTAIN TEMPLE
4150 GRAND CANYON DR
LAS VEGAS, NV 89129
USA

ISSUED FOR CONSTRUCTION

PROJECT NUMBER:	2502002
WORK ORDER:	C20
QUANTITY:	1
DATE CREATED:	APR-16-2025
MISC:	----
MISC:	----
MISC:	----
PROJECT MANAGER:	ISAAC WILSON
DRAFTER:	BRIAN GARNER
REVIEWER:	MB, BG, MB, SZ
FLOOR:	---
AREA:	---
PHASE:	---
ROOM:	115
ELEVATION:	7/A802
CUSTOMER FIXTURE ID:	---
SHEET TITLE:	115 ADMIN OFFICE BASE CABS WD1

SHEET NUMBER:
C20.1
SHEET: 1 OF: 5

DIMENSION ARE IN INCHES UNLESS SPECIFIED OTHERWISE. COPYRIGHT © 2026 – ALL RIGHTS RESERVED. FILE PATH: G:\PROJECTS\2502002 - LONE MOUNTAIN TEMPLE\(03) Design\C20 – 115 ADMIN OFFICE BASE CABS WD1\C20 – 115 ADMIN OFFICE BASE CABS WD1.dwg LAYOUT: C20.1 PLOT DATE AND TIME: JAN-23-2026 3:26 PM LAST SAVED BY: DNORMAN LAST SAVEDATE: JAN-23-2026 2:25 PM

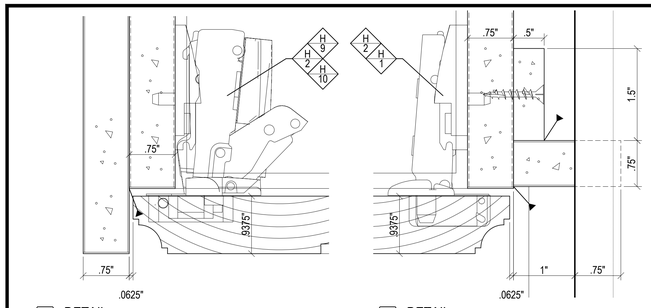

A DETAIL
FULL SCALE

B DETAIL
FULL SCALE

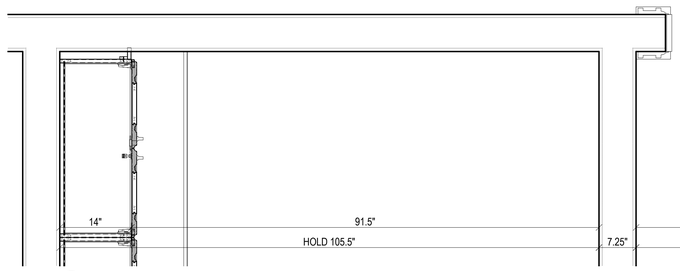

6 PLAN SECTION
1"=1'-0"

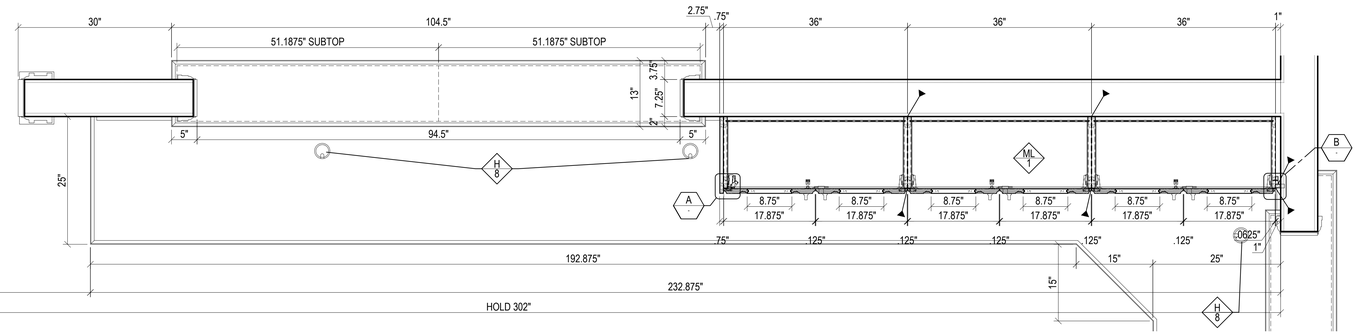

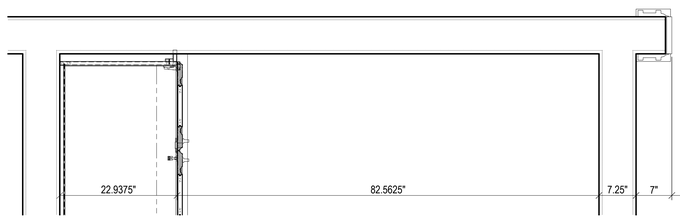

5 PLAN SECTION
1"=1'-0"

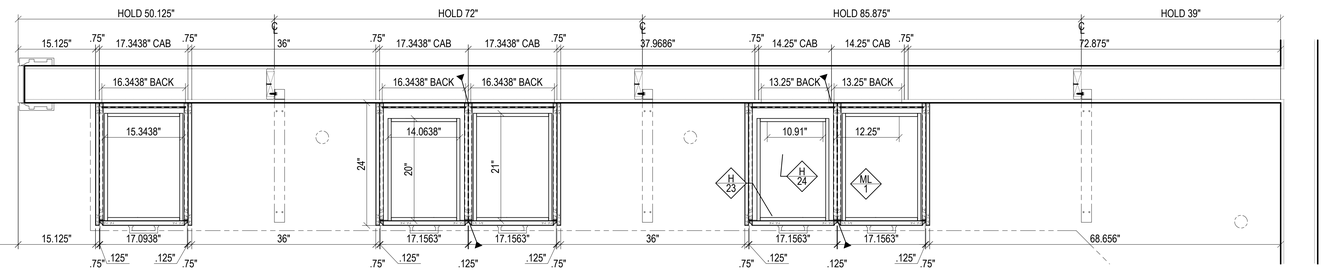

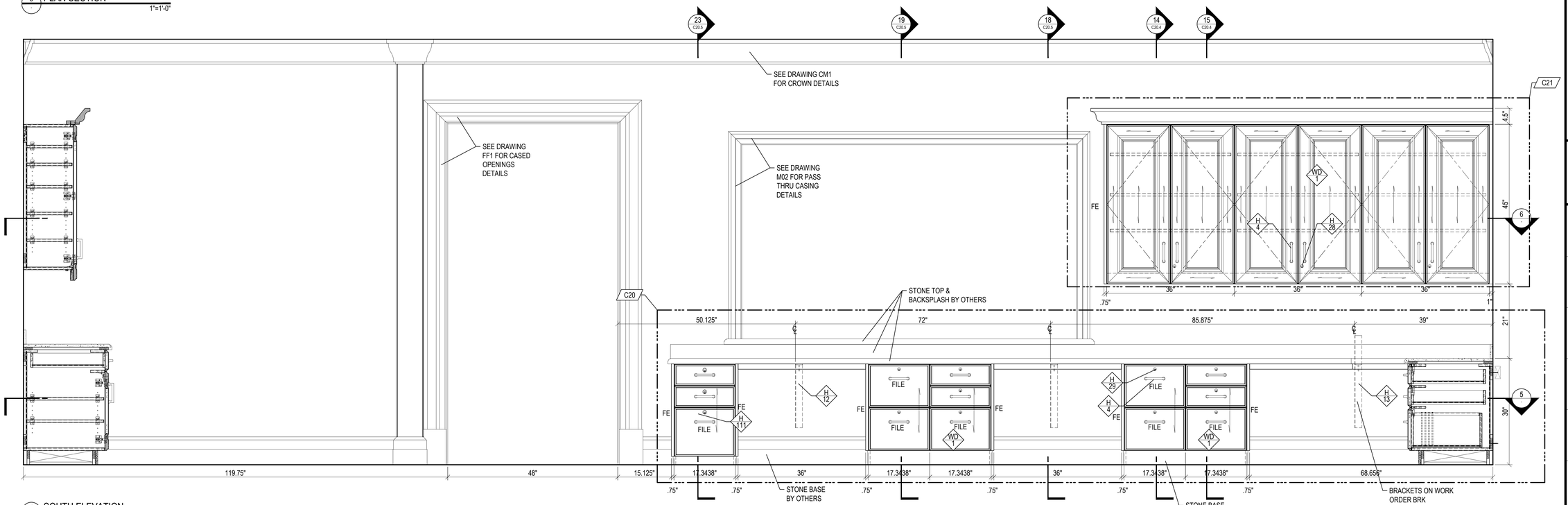

4 SOUTH ELEVATION
C20.1 15/A8.12
1"=1'-0"

FETZER ARCHITECTURAL WOODWORK

PROJECT:

LONE MOUNTAIN TEMPLE
4150 GRAND CANYON DR
LAS VEGAS, NV 89129
USA

ISSUED FOR CONSTRUCTION

PROJECT NUMBER: 2502002	WORK ORDER: C20	QUANTITY: 1	DATE CREATED: APR-16-2025
PROJECT MANAGER: ISAAC WILSON	DRAFTER: BRIAN GARNER	REVISED BY: MB, BG, MB, SZ	MISC: ----
FLOOR: ----	AREA: ----	PHASE: ----	FROM: 115
SHEET TITLE: 115 ADMIN OFFICE BASE CABS WD1		ELEVATION: 71/A802	MISC: ----
		CUSTOMER FIXTURE ID: ----	

SHEET NUMBER:
C20.2
SHEET: 2 OF: 5

DIMENSION ARE IN INCHES UNLESS SPECIFIED OTHERWISE. COPYRIGHT: © 2026 – ALL RIGHTS RESERVED. FILE PATH: G:\PROJECTS\2502002 - LONE MOUNTAIN TEMPLE\03) Design\C20 – 115 ADMIN OFFICE BASE CABS WD1\C20 – 115 ADMIN OFFICE BASE CABS WD1.dwg LAYOUT: C20.2 PLOT DATE AND TIME: JAN-23-2026 3:26 PM LAST SAVED BY: DNORMAN LAST SAVED DATE: JAN-23-2026 3:25 PM

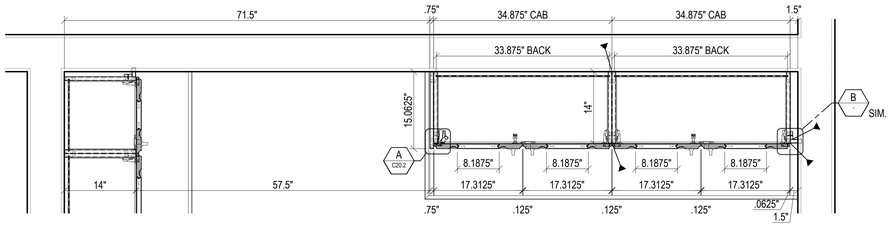

13 PLAN SECTION
1"=1'-0"

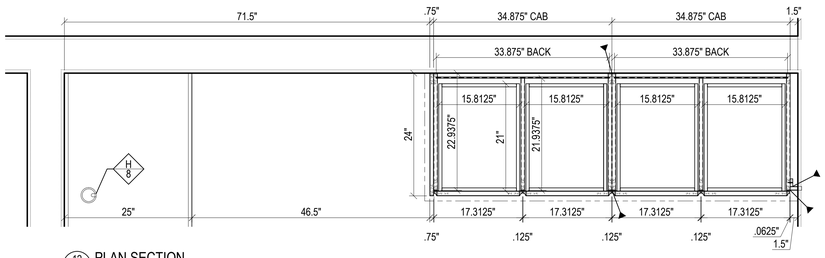

12 PLAN SECTION
1"=1'-0"

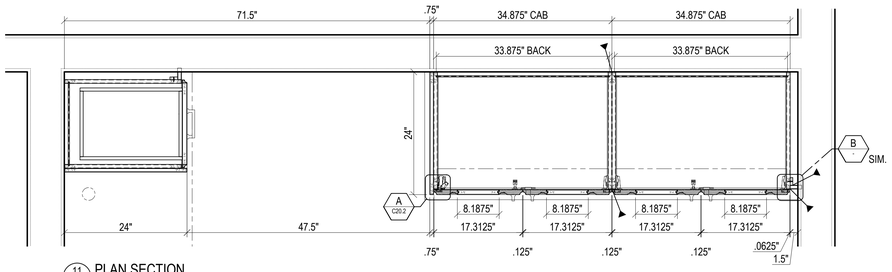

11 PLAN SECTION
1"=1'-0"

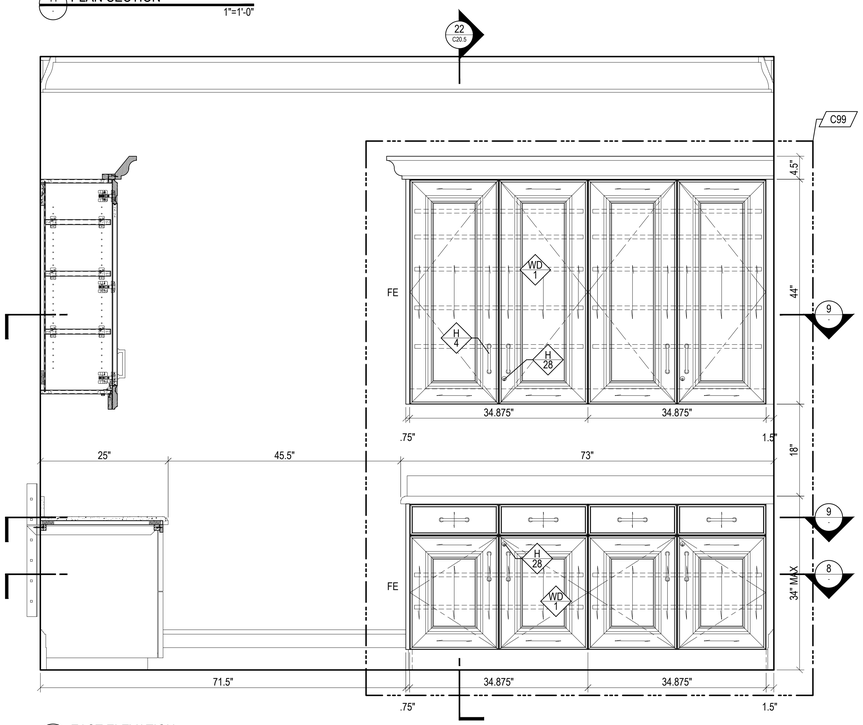

10 EAST ELEVATION
C20.1 18/A8.12
1"=1'-0"

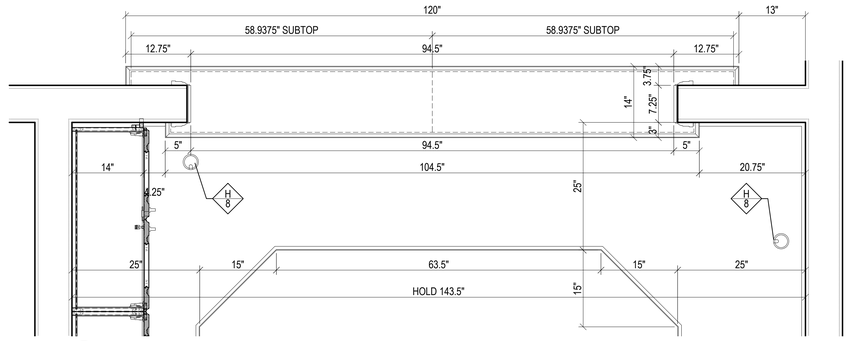

9 PLAN SECTION
1"=1'-0"

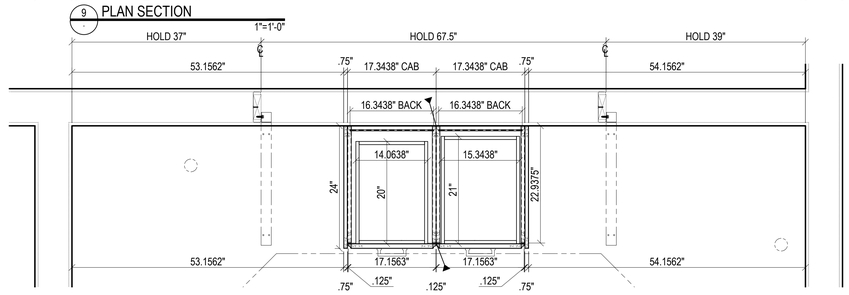

8 PLAN SECTION
1"=1'-0"

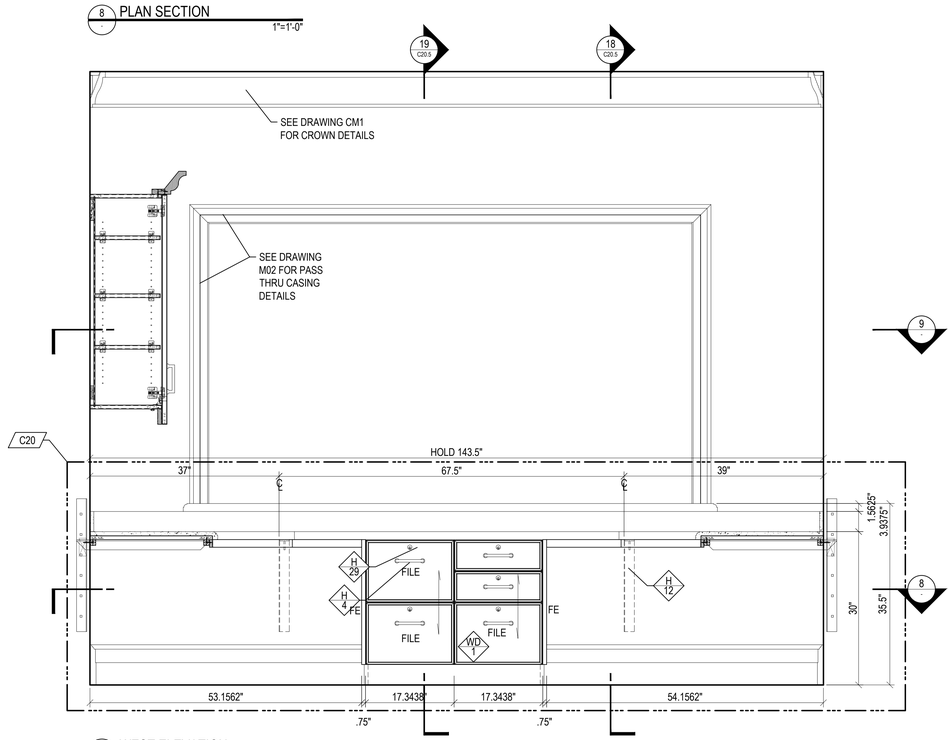

7 WEST ELEVATION
C20.1 14/A8.12
1"=1'-0"

FETZER ARCHITECTURAL WOODWORK

PROJECT:

LONE MOUNTAIN TEMPLE
4150 GRAND CANYON DR
LAS VEGAS, NV 89129
USA

ISSUED FOR CONSTRUCTION

PROJECT NUMBER: 2502002	WORK ORDER: C20	QUANTITY: 1	DATE CREATED: APR-16-2025
PROJECT MANAGER: ISAAC WILSON	DRAFTER: BRIAN GARNER	REVISED BY: MB, BG, MB, SZ	
FLOOR:	AREA: ----	PHASE: ----	ROOM: 115
SHEET TITLE:			ELEVATION: 7/A802
		MISC: ----	MISC: ----
		CUSTOMER FIXTURE ID:	----

115 ADMIN OFFICE BASE CABS WD1

SHEET NUMBER:
C20.3
SHEET: 3 OF: 5

DIMENSION ARE IN INCHES UNLESS SPECIFIED OTHERWISE. COPYRIGHT: © 2026 – ALL RIGHTS RESERVED. FILE PATH: G:\PROJECTS\2502002 - LONE MOUNTAIN TEMPLE\(03) Design\C20 – 115 ADMIN OFFICE BASE CABS WD1\C20 – 115 ADMIN OFFICE BASE CABS WD1.dwg LAYOUT: C20.3 PLOT DATE AND TIME: JAN-23-2026 3:26 PM LAST SAVED BY: DNORMAN LAST
SAVED DATE: JAN-23-2026 3:26 PM

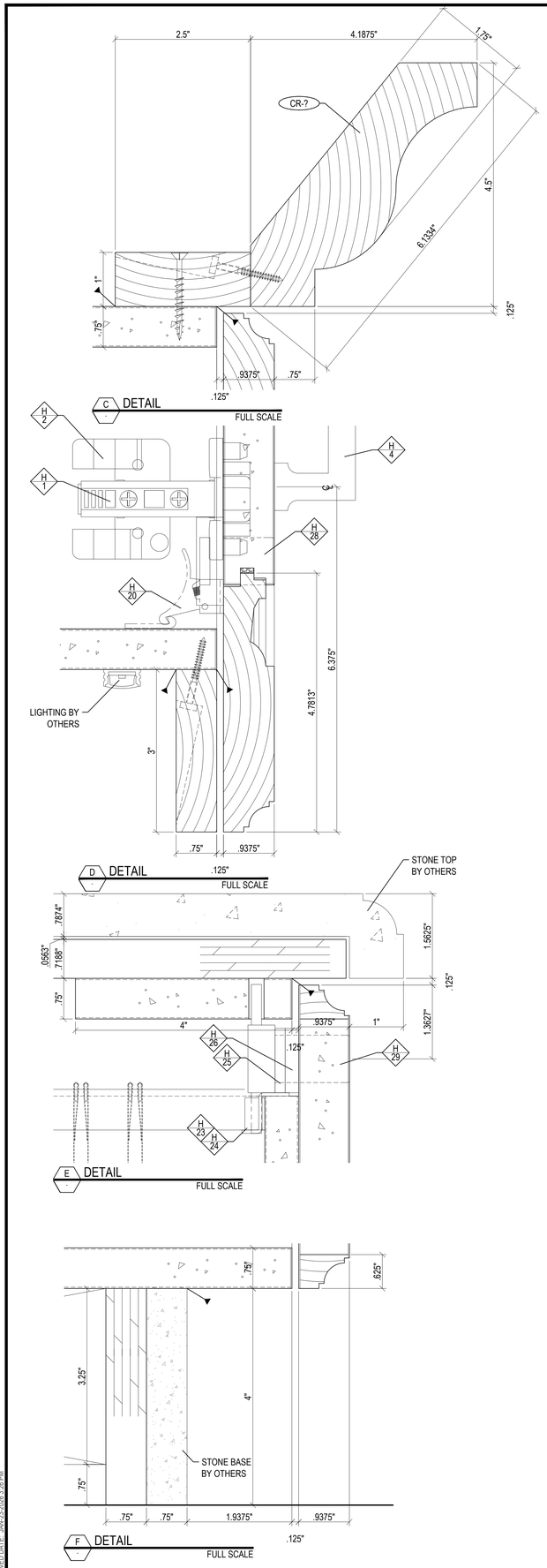

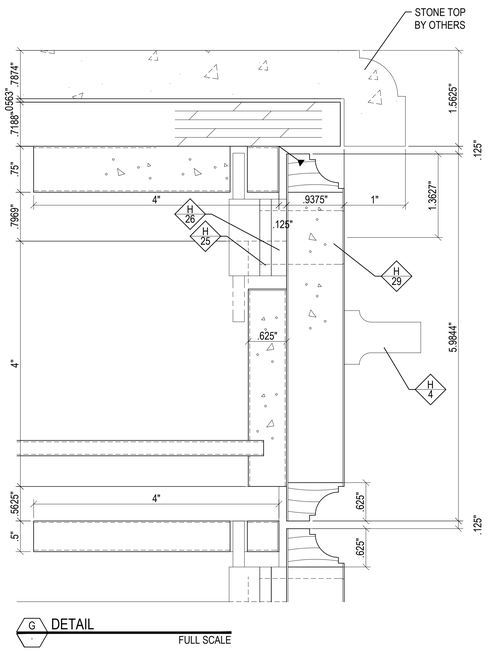

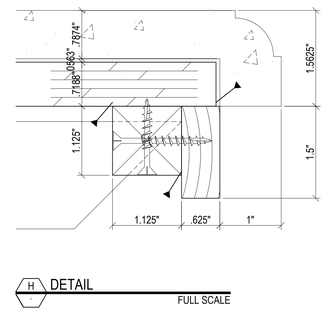

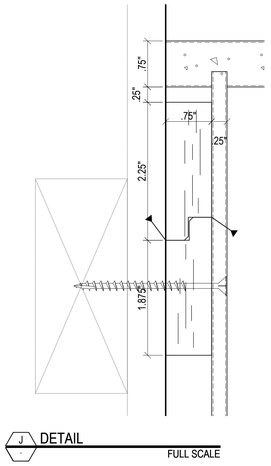

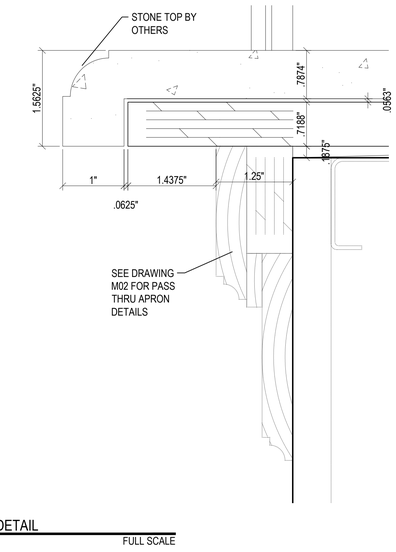

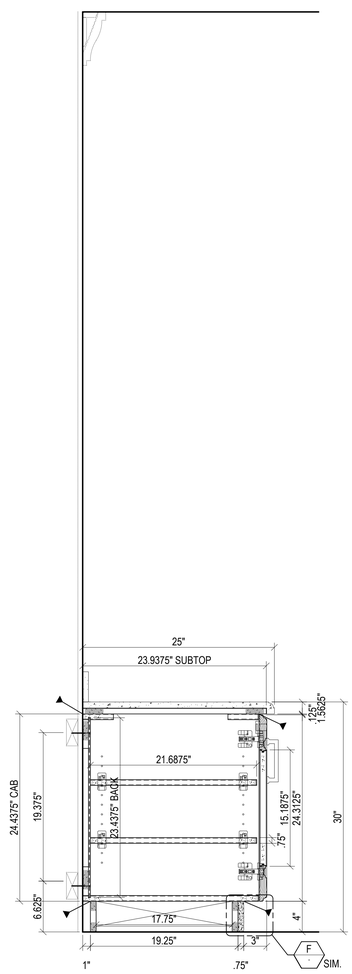

17 CROSS SECTION
C20.1 3/A9.55 1 1/2"=1'-0"

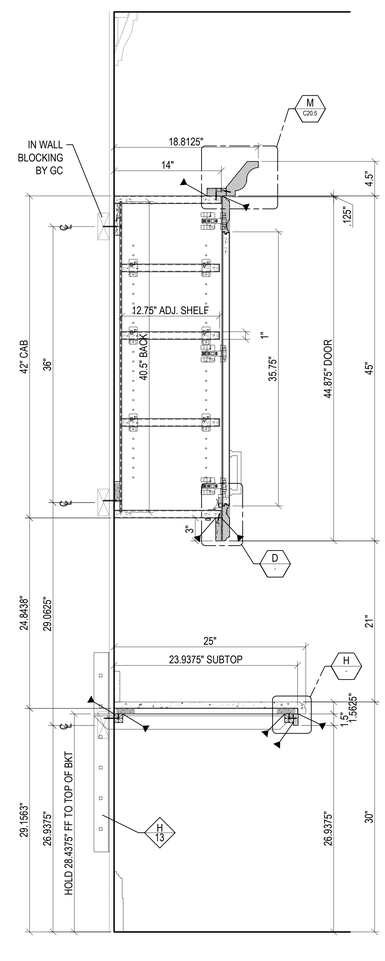

16 CROSS SECTION
C20.1 7/A9.55 1 1/2"=1'-0"

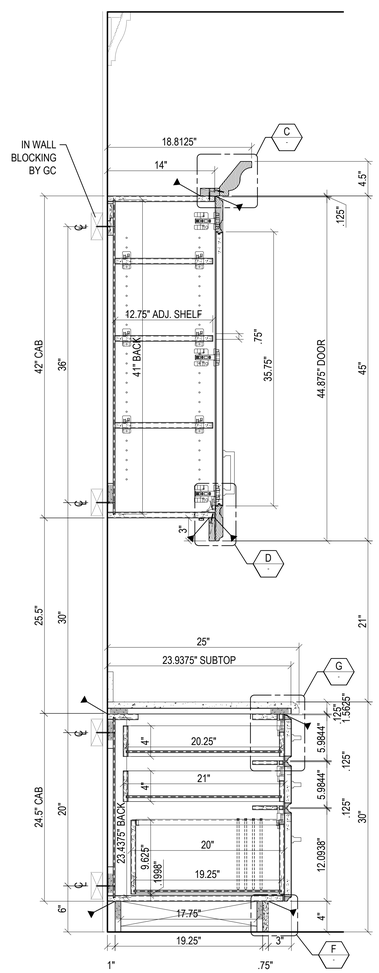

15 CROSS SECTION
C20.1 1/A9.55 1 1/2"=1'-0"

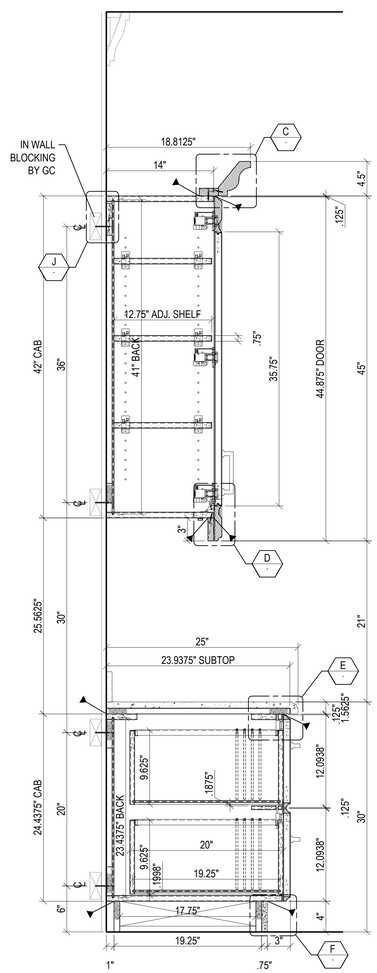

14 CROSS SECTION
C20.1 2/A9.55 1 1/2"=1'-0"

DIMENSION ARE IN INCHES UNLESS SPECIFIED OTHERWISE. COPYRIGHT: © 2026 – ALL RIGHTS RESERVED. FILE PATH: G:\PROJECTS\2502002 - LONE MOUNTAIN TEMPLE\(03) Design\C20 – 115 ADMIN OFFICE BASE CABS WD1\C20 – 115 ADMIN OFFICE BASE CABS WD1.dwg
SAVED DATE: JAN-23-2026 3:26 PM PLOT DATE AND TIME: JAN-23-2026 3:26 PM LAYOUT: C20.4 LAST SAVED BY: DNORMAN LAST

FETZER ARCHITECTURAL WOODWORK

PROJECT:

LONE MOUNTAIN TEMPLE
4150 GRAND CANYON DR
LAS VEGAS, NV 89129
USA

ISSUED FOR CONSTRUCTION

PROJECT NUMBER: 2502002	WORK ORDER: C20	QUANTITY: 1	DATE CREATED: APR-16-2025	MISC: ----	MISC: ----
PROJECT MANAGER: ISAAC WILSON	DRAFTER: BRIAN GARNER			REVISED BY: MB, BG, MR, SZ	
FLOOR: ----	PHASE: ----	AREA: ----	ROOM: 115	ELEVATION: 7/A802	CUSTOMER FIXTURE ID: ----
SHEET TITLE: 115 ADMIN OFFICE BASE CABS WD1					

SHEET NUMBER:
C20.4
SHEET: 4 OF: 5

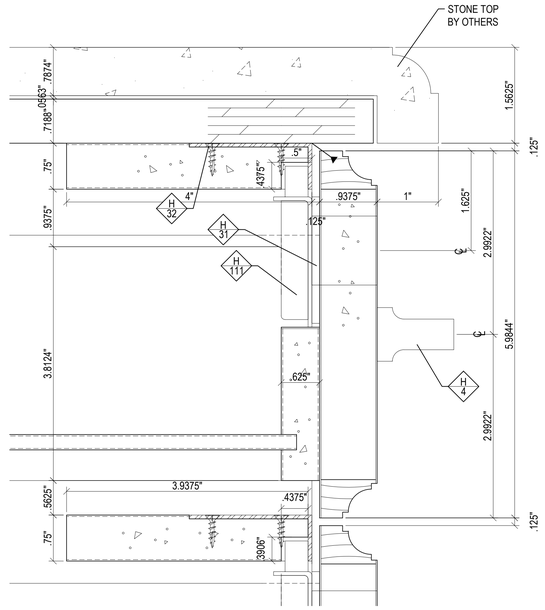

L DETAIL
FULL SCALE

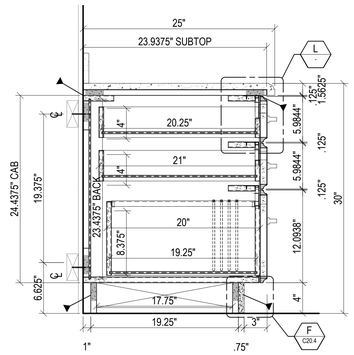

23 C20.2 CROSS SECTION
4/A9.55
1 1/2"=1'-0"

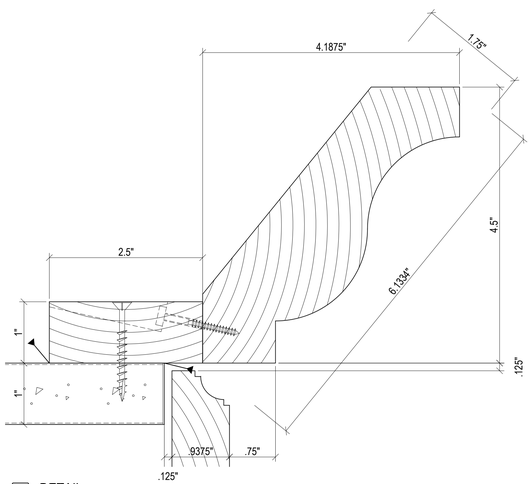

M DETAIL
FULL SCALE

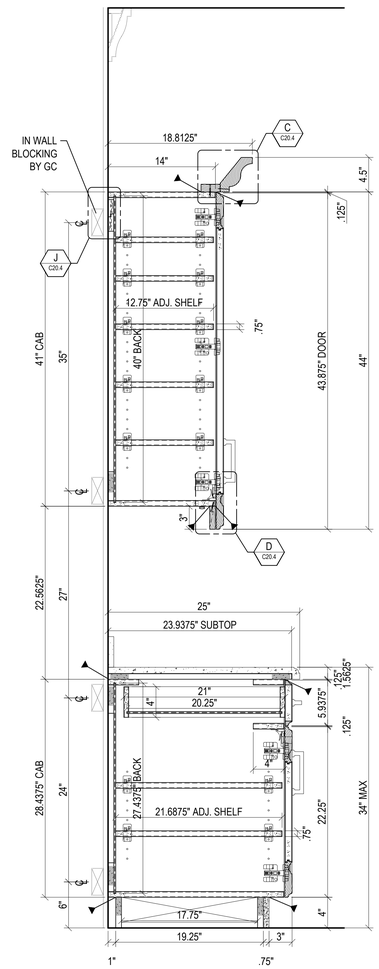

22 C20.2 CROSS SECTION
8/A9.55
1 1/2"=1'-0"

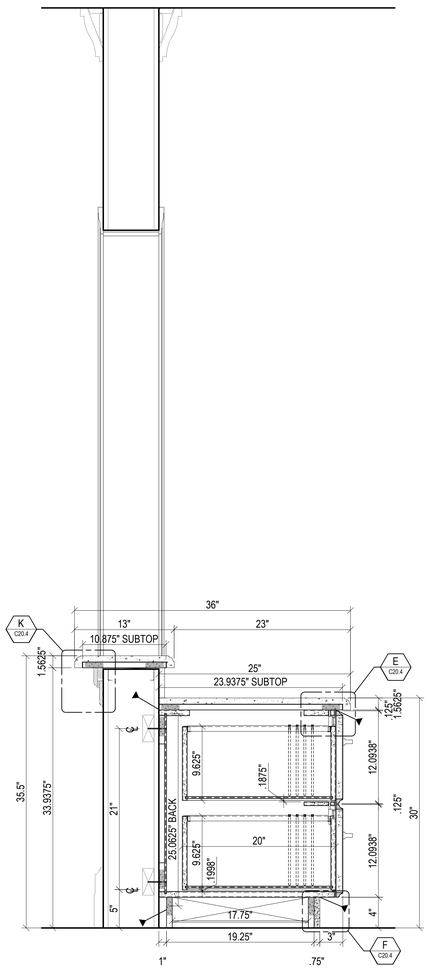

19 C20.2 CROSS SECTION
6/A9.55
1 1/2"=1'-0"

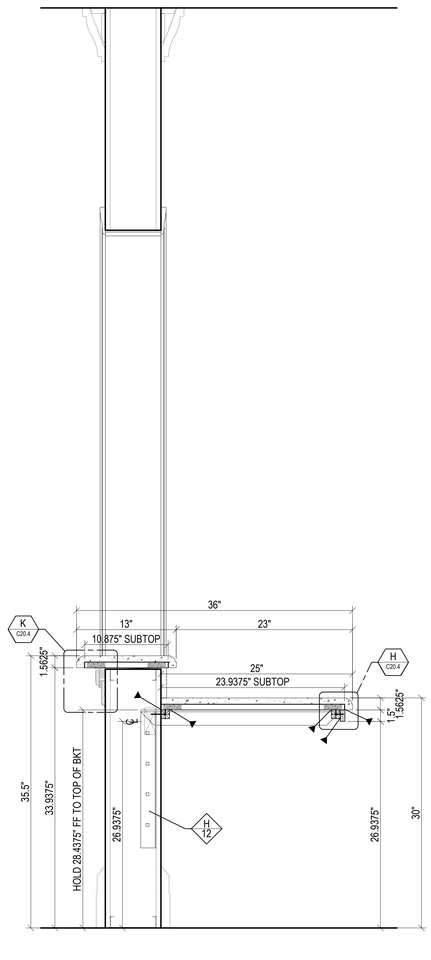

18 C20.2 CROSS SECTION
10/A9.55
1 1/2"=1'-0"

FETZER
ARCHITECTURAL WOODWORK

PROJECT

LONE MOUNTAIN TEMPLE
4150 GRAND CANYON DR
LAS VEGAS, NV 89129
USA

ISSUED FOR CONSTRUCTION

PROJECT NUMBER: 250/2002	WORK ORDER: C20	QUANTITY: 1	DATE CREATED: APR-16-2025	MISC: ---	MISC: ---
PROJECT MANAGER: ISAAC WILSON	DRAFTER: BRIAN GARNER			REVISED BY: MB, BG, MB, SZ	
FLOOR: ---	PHASE: ---	AREA: ---	DOOR: 115	ELEVATION: 7/A802	CUSTOMER (TOP LINE ID): ---
SHEET TITLE: 115 ADMIN OFFICE BASE CABS WD1					

SHEET NUMBER:
C20.5
SHEET: 5 OF: 5

DIMENSION ARE IN INCHES UNLESS SPECIFIED OTHERWISE. COPYRIGHT © 2026 -- ALL RIGHTS RESERVED. FILE PATH: G:\PROJECTS\250\2002 - LONE MOUNTAIN TEMPLE\(03) Design\C20 -- 115 ADMIN OFFICE BASE CABS WD1\C20 -- 115 ADMIN OFFICE BASE CABS WD1.dwg LAYOUT: C20.5 PLOT DATE AND TIME: JAN-23-2026 3:26 PM LAST SAVED BY: DNORMAN LAST
SAVED DATE: JAN-23-2026 3:26 PM