Quick Disconnect PC Fan Casing Design and Analysis

Benjamin May, Joseph Marsh, Forest Green, Connor Lytle

Section 1 - Product Overview

How might we make cleaning PCs easier? We have invented a product that would make the process of cleaning your PC fans a much faster and simpler process. Currently, the majority of PC fans are mounted directly to the PC case itself, making the removal process complicated. You must first find the fan's cable, which must be disconnected before the fan can be removed, oftentimes ruining your computer's cable management. Only then can you access the mounting screws and remove them, depending on the layout of your computer this is a process all on its own. It's only then that the fan can be properly cleaned outside of the computer. Our product would solve all of the issues that pertain to the removal of PC fans for cleaning, and a computer that is easier to clean is a computer more frequently cleaned, which is our end goal.

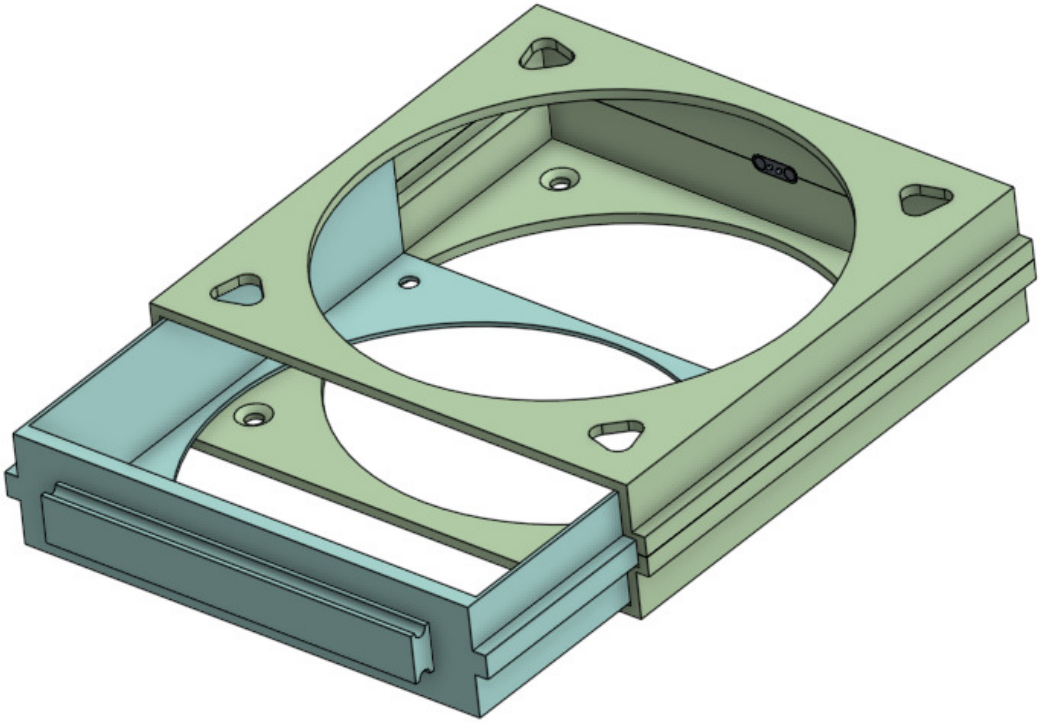

Our product is based on what we call the 'Quick Disconnect' process. Rather than mounting a fan directly onto the frame of the case, we have developed an alternative. Our invention is split into two components, a sheath and a basket. The sheath will mount to the PC using the same screw holes as the fan did, providing a secure mount for the sheath. The fan will then be placed into the basket which will slide

nicely into place, utilizing our built-in track system. This allows the user to very simply pull out the fan for cleaning before sliding it back into place. No more tearing into your computer to clean it. There is one issue with our initial prototype that we're taking steps to rectify. You may have noticed that this doesn't so much fix the issue of cable management, if the fan slides out of the PC then it'll be limited by the length of the cable and impossible to nicely push back in. Our solution to this is to implement magnetic pogo pin connectors, our production version would include a set of these quick-connect cable adapters. The PC fan would have one attached to one side which would face the receiving connector built into the frame of the sheath. The sheath side connector would then run a cable to the original socket. This way the basket with the fan can be pulled out, cleaned, and slid back into place without any worries about cables.

Section 2 - Prototype Process :

Moving forward after the midterm report, one of our biggest uncertainties was how we were going to integrate the electrical components into our design. None of us had a background in anything electrical-related and we would have needed a specialized fan for our final component design. We ended up using a premade PC fan rather than modeling our own and having a "looks like" model rather than a "works like" model. One of the other uncertainties was the impact of airflow that the case would have on the PC fan. We weren't 100% sure whether it would hinder airflow enough to make our product not viable, and testing for it was inconclusive. Unlike the obvious temperature change that happened when we added the big dehumidifier to the inside of the PC case, there was no large change that happened to the internal temperature of the PC when we added the case over the fan. This is likely because the cases have a much smaller footprint compared to the large dehumidifier.

We will be going over the prototype refining process by describing the needs of the users and explaining how our initial prototype didn't fit the needs of the users, which we realized with key insights over the past few weeks. Over the past few weeks, we've refined our design quite a bit. We were initially thinking of a single-component design for our prototype. This was our first major insight into the final form. We realized that having a single-component design may not be the best idea since it would just be a casing to have the fan in and it wouldn't be easy to slide the fan in and out. Through this, we came up with our two-component design where there was an area for the fan to click into and also an area for the combination of the fan and the housing to slide into inside the actual PC case (see image 1 vs. image 2). This allowed for easier insertion and cleaning for the user.

We then realized that instead of having two holes for the wires of the fan to stick through, we could have one quick connect option for the fan(see image 3 vs. image 4)

This made the electrical side of our design more complicated, but it also made the entire design fit simply with the PC designs. It allows the users to focus less on the cable management side of things since they don't have to worry about unplugging and plugging in the fan every time they take it off to clean. This makes the whole process simpler and easier for the user. One other main thing that we changed, other than small things in the design is we had a major change in the hole sizes within the casing(see image 5 vs. image 6). This was because we realized that users may have gotten confused about which hole to put the screw into connecting to the PC wall, and which hole was to be used for the PC fan.

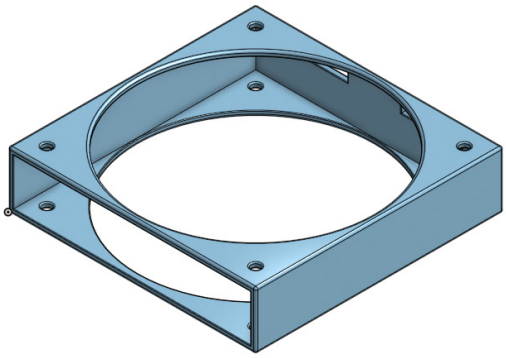

Image 1: Single Component Design

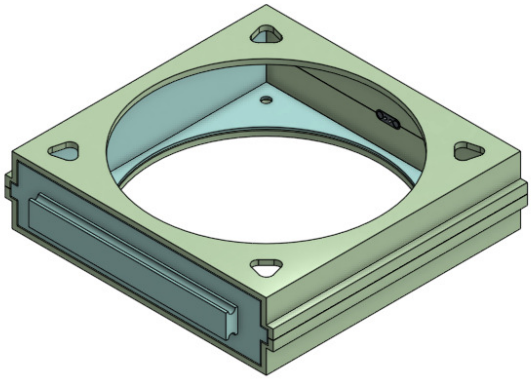

Image 2: Multiple Component Design

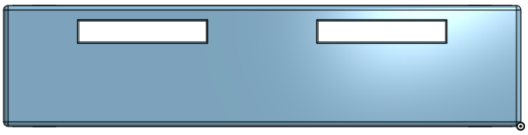

Image 3: Initial Prototype Backing

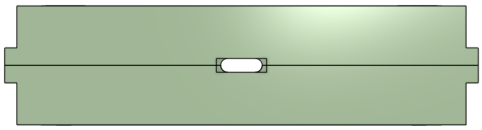

Image 4: Final Prototype Backing

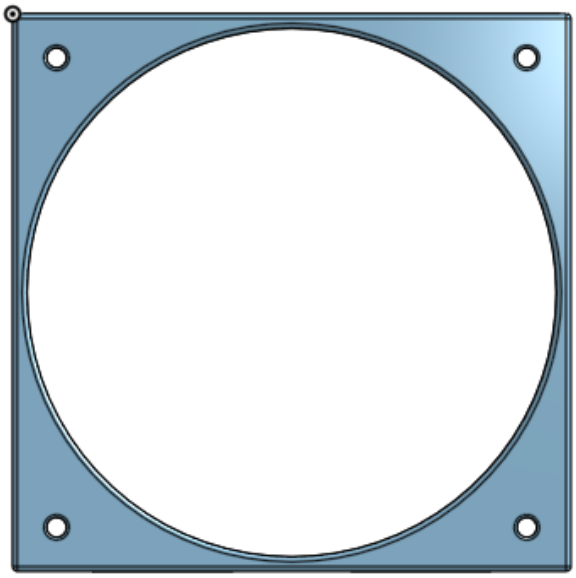

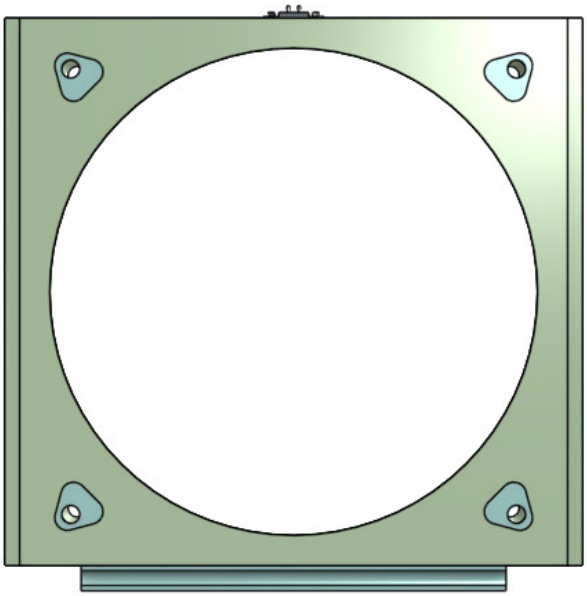

Image 5: Initial Prototype Holes **Image 6: Final Prototype Holes**

Section 3 - Production Analysis :

Our product is fairly manufacturable in its current state, but could look more professional, and be more optimal for user use, with slight tweaks to the current design. Perhaps adding a lower friction material in the slide portion, and making the whole product out of either a better plastic or aluminum would accomplish one if not both of those. As for a first manufacturing run, we arrived at a humble number of 4,000 units. There is quite a lot of research and math that went into this, so bear with me. There were 331.5 million people that lived in the US in 2020 according to the US Census [2], and out of those 331.5 million people, 109.8 million of them are 15 to 39 years old [2], which is our target demographic, as they are the most likely to find and see the value in our product (this number also comes from US Census data having the range of 15-19, so I divided the total population in that age range by 5 to add 18 and 19 to the other age ranges). Now, roughly 74% of adults own a personal computer in 2019 [1], which cuts our users down to 81.3 million people. Then, with an expected percentage of that population testing a new computer product of 0.001%, which is the lower end of what computer add-ons are expected to do in first runs, that would provide us with roughly 850 units. But, the average desktop computer that people own has 3 case fans, so 850 fans times 3, which equals about 2500 units as our total for our first production run.

For our overall assembly, and for production we would likely change the connection points between the male and female sheath components (Image 1). It would likely be designed to snap in better to each other, as our presented prototype required some glue to secure in place, because the inserts didn’t print with enough accuracy to

actually fit into and secure the completed sheath, so they had to be scrapped.

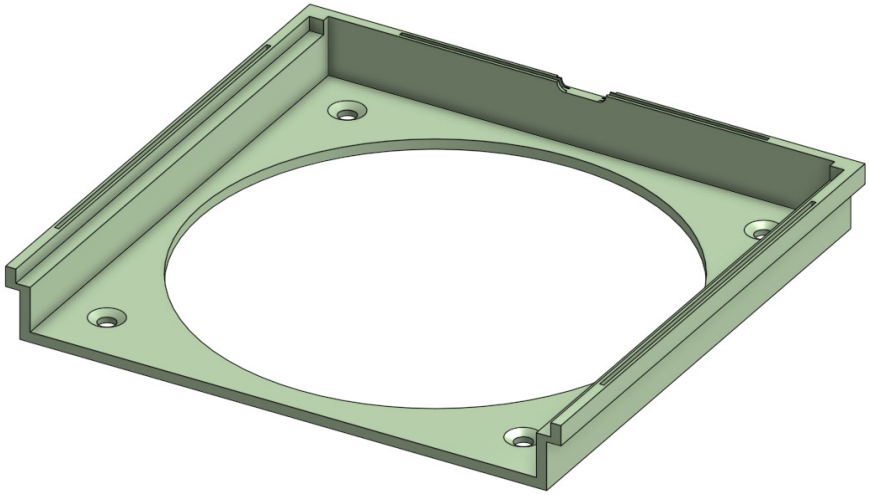

Image 1 : Sheath Lower

On top of the design changes of the upper and lower sheath, both sheath portions would be the most difficult to actually create in production. If it was going to be plastic, it would have to be injection molded. But on the positive side, if it were to be injection molded, there would be very few design changes made, as it doesn't have very complex geometries, and was modeled to be 3D-Printed in the first place (Image 1). But, with our knowledge of the personal computer world, people often believe that metal equals a higher quality product, so it should be CNC'd out of aluminum in order to portray quality over the plastic counterpart. There wouldn't need to be any major design changes if the part was to be made of CNC'd aluminum, but the wall thickness could be minimized,as aluminum can withstand more force in varying directions, and the male slot's width (Image 2) could be adjusted to accommodate for tolerance thresholds for whichever production facility was chosen, which could also potentially reduce cost.

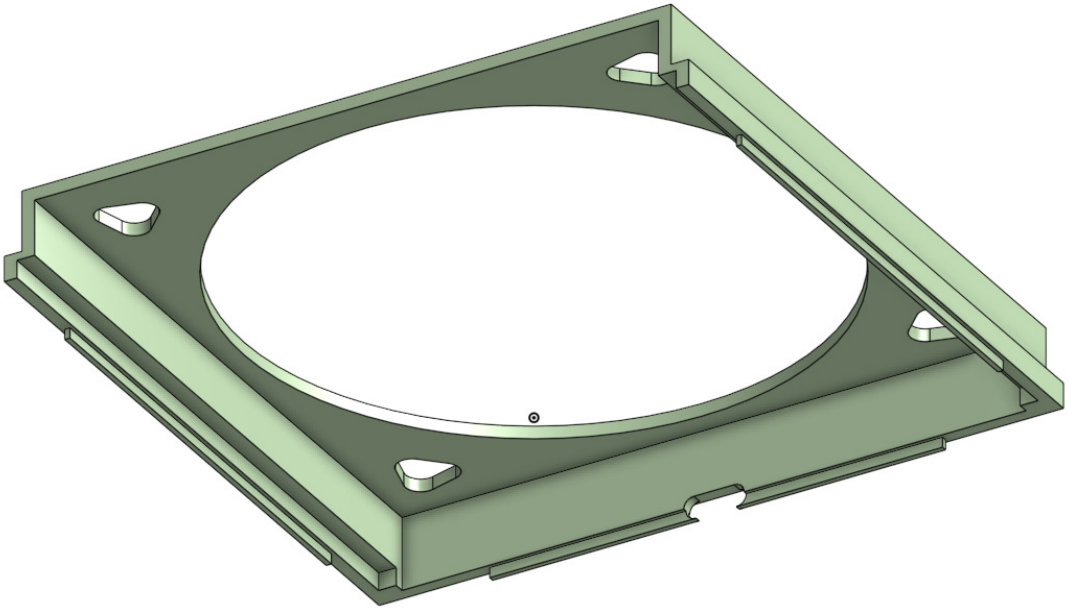

Image 2 : Upper Sheath

Ultimately, the entire design would remain relatively the same, with some small tweaks depending on the manufacturing process that we would choose. The design would also likely change once the first production models are actually made as we could then identify any improvements that could be made to design or materials used.

Section 4 - Sustainability & Inclusion Critique

Tarot Card: The Service Dog

Even though it was talked about in the prompt, I do think The Service Dog fits really well with our project. The specific group I was thinking about was people with physical disabilities who may not be able to fully reach into their PCs to take out all of the components when cleaning them. If all they have to do is reach into their PC case and pull out their fan to clean the PC rather than fully take everything apart, it could massively change their view of PCs. They would no longer need someone else to clean it for them, which could save them money, or the embarrassment of not being able to do it themselves. It could also empower them because they are capable of doing what seems like a complicated task themselves.

Section 5 - Reflection

What aided most in the improvement of our design was really getting an outside perspective. Talking with peers, as well as our professor and TA aided in guiding the design towards its more completed state. Starting as a very intrusive product, and developing it down to an easy-to-install add-on for a personal computer was a great turn-around and really aids in the ability to market the project as an actual product. Once we had our first physical prototype in hand also really helped us visualize what could be improved in the design, leading us from prototype one to prototype two, with the sliding mechanism added, as a major flaw was the ability to pull the computer fan out of the product easily.

For our teamwork, what really helped was being available to each other. Setting up a mode of communication that we could check easily and quickly, as well as being transparent about expectations for communication, meeting times, and the project overall really helped teamwork cohesiveness. The largest struggle for our team was the initial workload and getting used to the class. Getting to know each other, as well as getting interviews done, then throwing a bunch of ideas down was chaotic for us, and it ended very well, but started a little shaky. After the midterm report we all definitely took the project more seriously, and had a well-established workflow, which led to a much more streamlined process for our prototyping and designing phase. Our team finished much stronger than it started.

References (Chicago Style)

[1] Alsop, Thomas. “Desktop/Laptop Ownership among U.S. Adults 2008-2019.” Statista, July 27, 2022. https://www.statista.com/statistics/756054/united-states-adults-desktop-laptop-ownership/.

[2] Bureau, United States Census. “United States Census Age And Sex Data.” US Census Age And Sex Data. Accessed March 15, 2024. https://data.census.gov/table/ACSST5Y2020.S0101?g=010XX00US.

Section 2: Technical Documentation of Design and Analysis Processes

Article 1 - Prototype Bill of Materials Table: Include the following for every part of your prototype:

Item	Component Name	Quantity	Material	Acquired From	Part Number	Cost
1	Upper Sheath	1	PLA	3D Printer	00001	
2	Lower Sheath	1	PLA	3D Printer	00002	
3	Basket	1	PLA	3D Printer	00003	
4	Magnetic Pin Connector Set	1		COTS - Amazon	JH-Pogo2	$9.99
6	PC Fan Screws	4	Steel	COTS - Amazon	ES-SM5-10-B	$4.99
7	Superglue	<1	Ethyl Cyanoacrylate	COTS - Amazon	6008WF-2	$2.54

Article 2 - Production Bill of Materials Table: Construct a BOM of your product if it were to be mass-manufactured to the quantity referenced in your report. Include the following: **Based on an early production run of 4000 units we would outsource the Magnetic Pin Connector Set and manufacture the rest of our materials via injection molding. One option for our injection molding material would be polybenzimidazole, which is incredibly heat and abrasion-resistant. Injection molding the production would increase each unit's overall strength as they can be produced as one part rather than an upper and lower that would need to be joined.** ***Pricing is based on 4000 units and purchasing COTS in bulk.***

Item	Component Name	Quantity	Material	Acquired From	Part Number	Cost
1	Sheath	1	Polybenzimidazole	Injection Molding	00001	$0.95
2	Basket	1	Polybenzimidazole	Injection Molding	00002	$0.15
3	Magnetic Pogo Pin Connector	1 Set	Brass Alloy + High Temperature Plastic	COTS - Alibaba	MG03254-ST	$0.17
6	PC Fan Screws	4	Steel	COTS - AliExpress	ES-SM5-10-B	$0.05

For Tooling, Materials, Labor, and Overhead Costs, the production of 4000 units could cost between $15000 and $42000 depending on market prices and manufacturing facility costs. (Ullman Estimator and market research)

Bulk-order of connectors would be $675 for 4000 sets

Bulk-order screws would be $175 for 4000 sets of 4 screws

Magnetic Pogo Pin Connector	400 Batches x 10 Sets Per Batch

PC Fan Screws	534 Batches x 30 Screws Per Batch

Cost to buy these COTS in bulk

Article 3 - Failure Modes & Effects Analysis:

PRODUCT NAME:	EASY-CLEAN PC FANS	PRODUCTION TEAM:	SECTION 12, GROUP 6					PAGE(S):	FMEA #:	DATE:
								1 OF 1	12/31/1899	03/18/2024
Component	Function	Failure Mode	Failure Effect	Severity	Potential cause	Occurance	Detection Model	Detection	Recommended Action	RPN
LOWER SHEATH	Mounts to PC Case	Screw holes distort	Reduced mounting stability	7	Improper installation methods	6	Observe the fit of mounting hardware	8	Provide or identify optimal mounting screw installation process	336
		Mounting face cracks	Sheath looses structural rigidity	8	Excesive force from user	7	Inspect for fractures in structure	5	Provide toque specs/guage of tightness for screws	280
-	Receives UPPER SHEATH	Sliding rail warps	Sheath alignment is compromised	4	Excesive heat from PC	3	Assess mating surface integrity	7	-	84
		-	-	-	-	-	-	-	-	-
(COMPOSITE SHEATH)	Holds BASKET	Upper and Lower Sheath seperate	Product ceases to function	9	wear over time, improper mating	5	Assess strength of mating bond	7	Identify optimal adhesive and ideal locations for application	315
		Internal deformations	Basket cannot insert or extract	8	Wear over time, heat cycles	2	Complete use cycles and observe friction and fitment	5	-	80
UPPER SHEATH	Attatches to LOWER SHEATH	Mounting access slots deform	Installation and uninstallation negativley impacted	4	Incorrect tools used for installation	3	Check tool clearences for the slot	5	-	60
		-	-	-	-	-	-	-	-	-
BASKET	Inserts into COMPOSITE SHEATH	Side walls warp	Impossible to insert Basket	5	Improper handelling	4	Verify internal dimensions match Sheaths	4	-	80
		-	Fan will not fit securley	6	Heat warping	4	Verify internal dimensions match fan	7	Redesign component with cross-members to maintain shape and rigidity	168
PLUG	Provides power for fan	Pins get stuck in the compressed position	Plug ceases to provide function to fan, will need new component	8	Wear over time	2	Check functionality of pins via. compression	5	-	80
		Socket/internal damage	Plug can no longer be connected to a power source	7	Improper handelling	6	Inspect socket for debris and/or damage to connecting pins	7	Design a guide/gaurd for the insertion of the power/control cable into the socket of the Plug	294

Table 1. FMEA Table w/ Recommendations.

Article 4 - Part & Assembly Drawings Package:

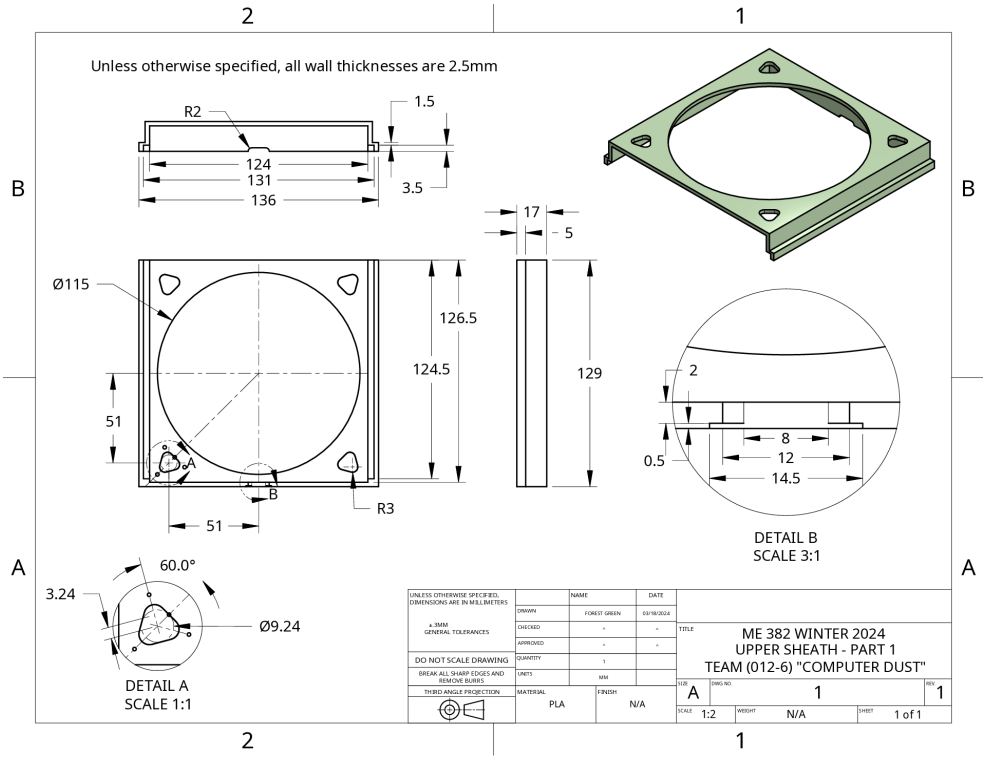

Fig. 1. Part 1: “Upper Sheath”.

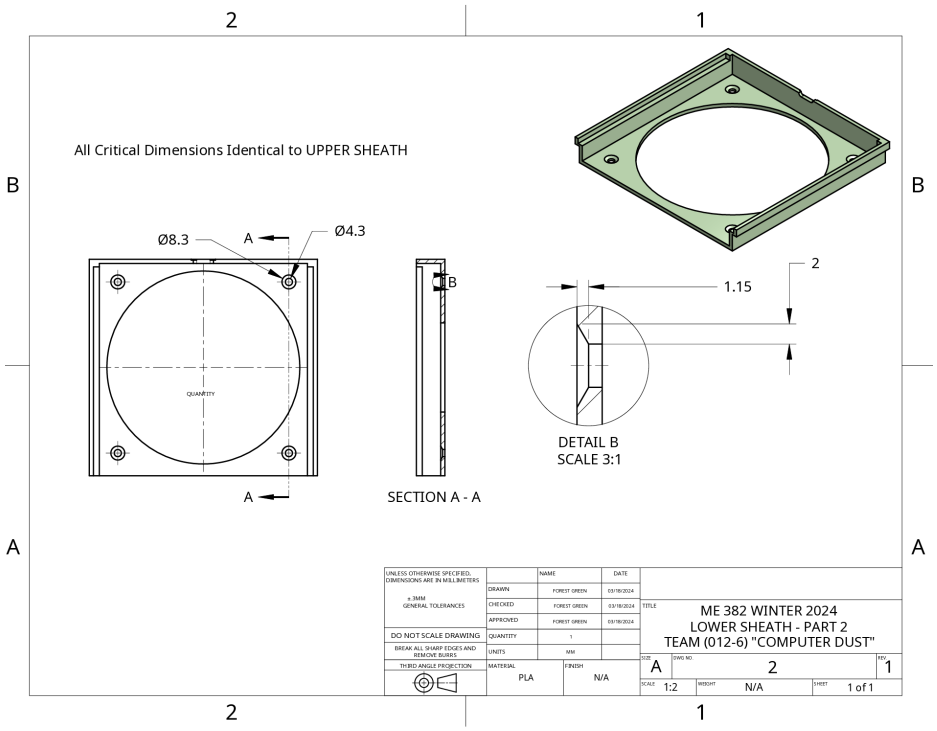

Fig. 2. Part 2, “Lower Sheath”.

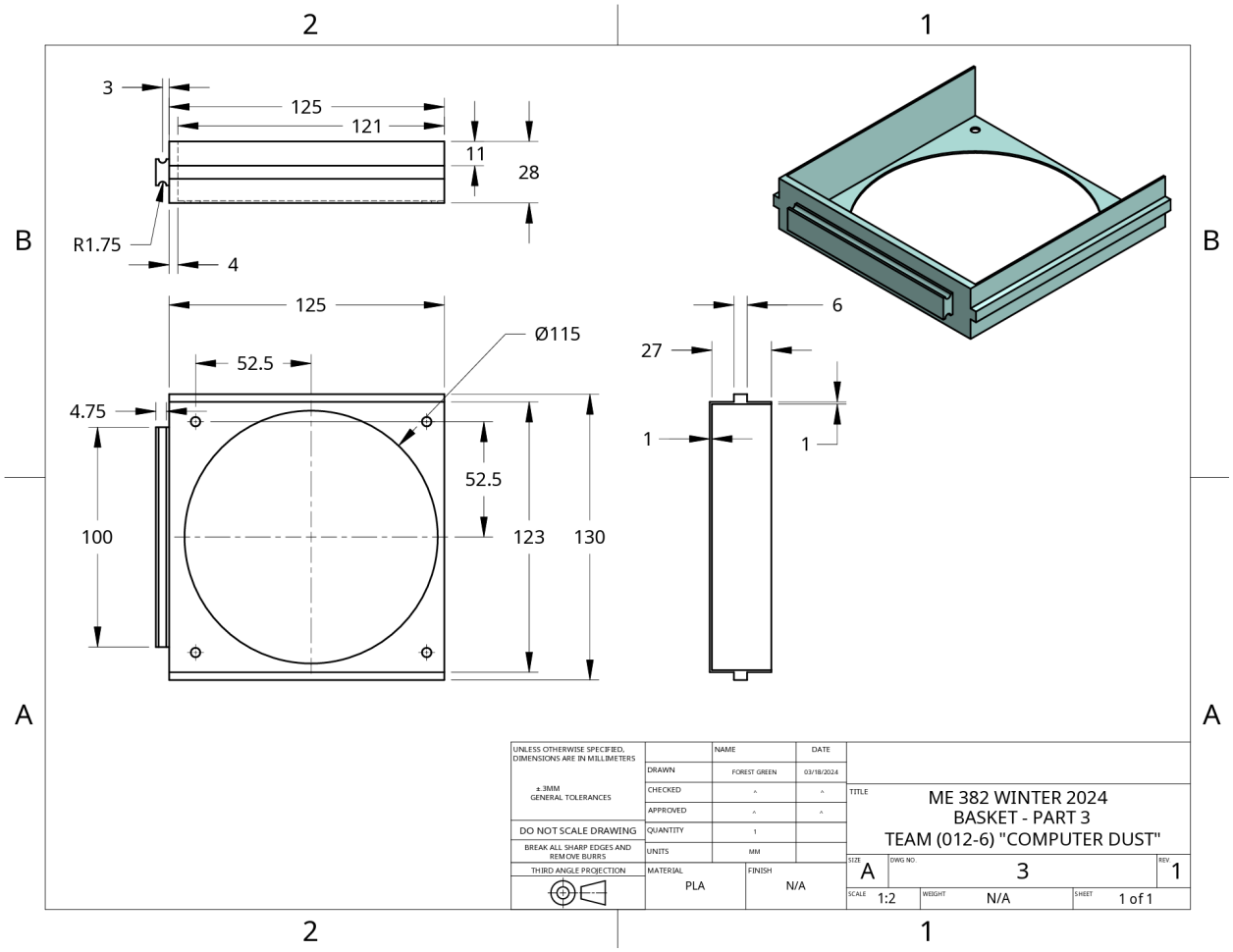

Fig. 3. Part 3: “Basket”.

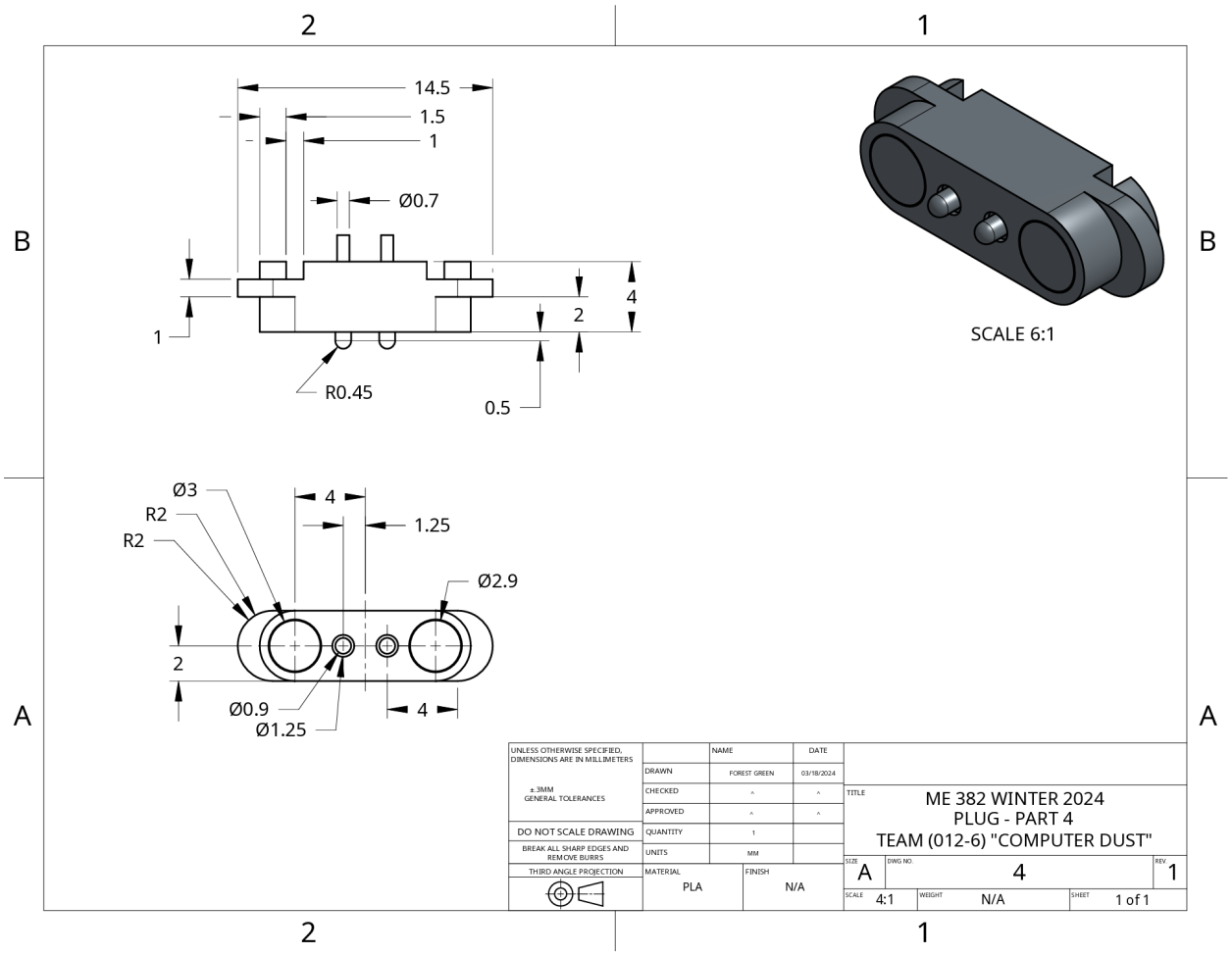

Fig. 4. Part 4: “Plug”.

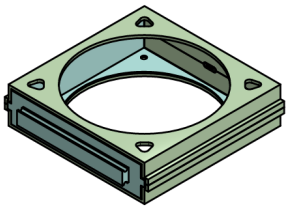

Collapsed View - Isometric
SCALE 1:3

Item	Quantity	Part number	Name	Description	Material	Vendor
1	1	01	SHEATH UPPER	GLUED TO (L) SHEATH	PLA	3D PRINTED
2	1	02	SHEATH LOWER	MOUNTS TO PC CASE	PLA	3D PRINTED
3	1	03	CASKET	INSERTS INTO SHEATH	PLA	3D PRINTED
4	1	04 (JH-Pogo2)	PLUG	INSERTS INTO SHEATH		AMAZON

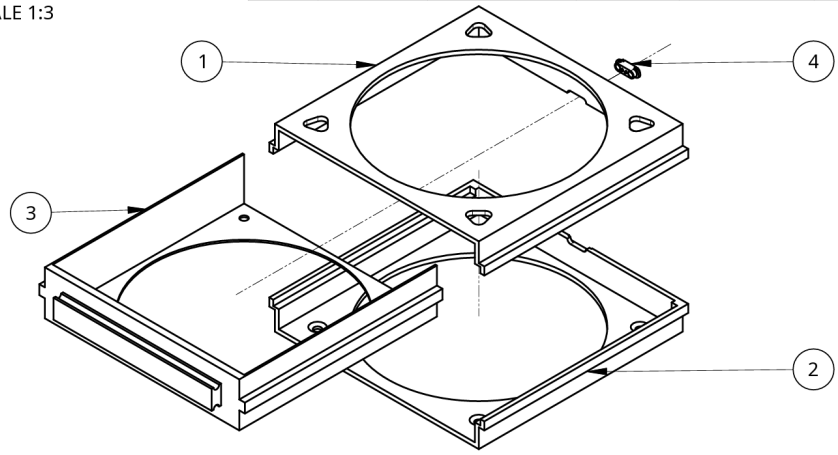

Exploded View - Isometric

UNLESS OTHERWISE SPECIFIED, DIMENSIONS ARE IN MILLIMETERS
± .3MM GENERAL TOLERANCES
DO NOT SCALE DRAWING
BREAK ALL SHARP EDGES AND REMOVE BURRS
THIRD ANGLE PROJECTION

	NAME	DATE
DRAWN	FOREST GREEN	03/18/2024
CHECKED	^	^
APPROVED	^	^
QUANTITY	1	
UNITS	MM	

MATERIAL: PLA
FINISH: N/A

TITLE: ME 382 WINTER 2024
EASY CLEAN FAN ASSM. (1)
TEAM (012-6) "COMPUTER DUST"

SIZE: A | DWG NO.: 5 | REV: 1
SCALE: 1:2 | WEIGHT: N/A | SHEET: 1 of 1

Fig. 5. Assembly Drawing.

Article 5 - Prototype Media:

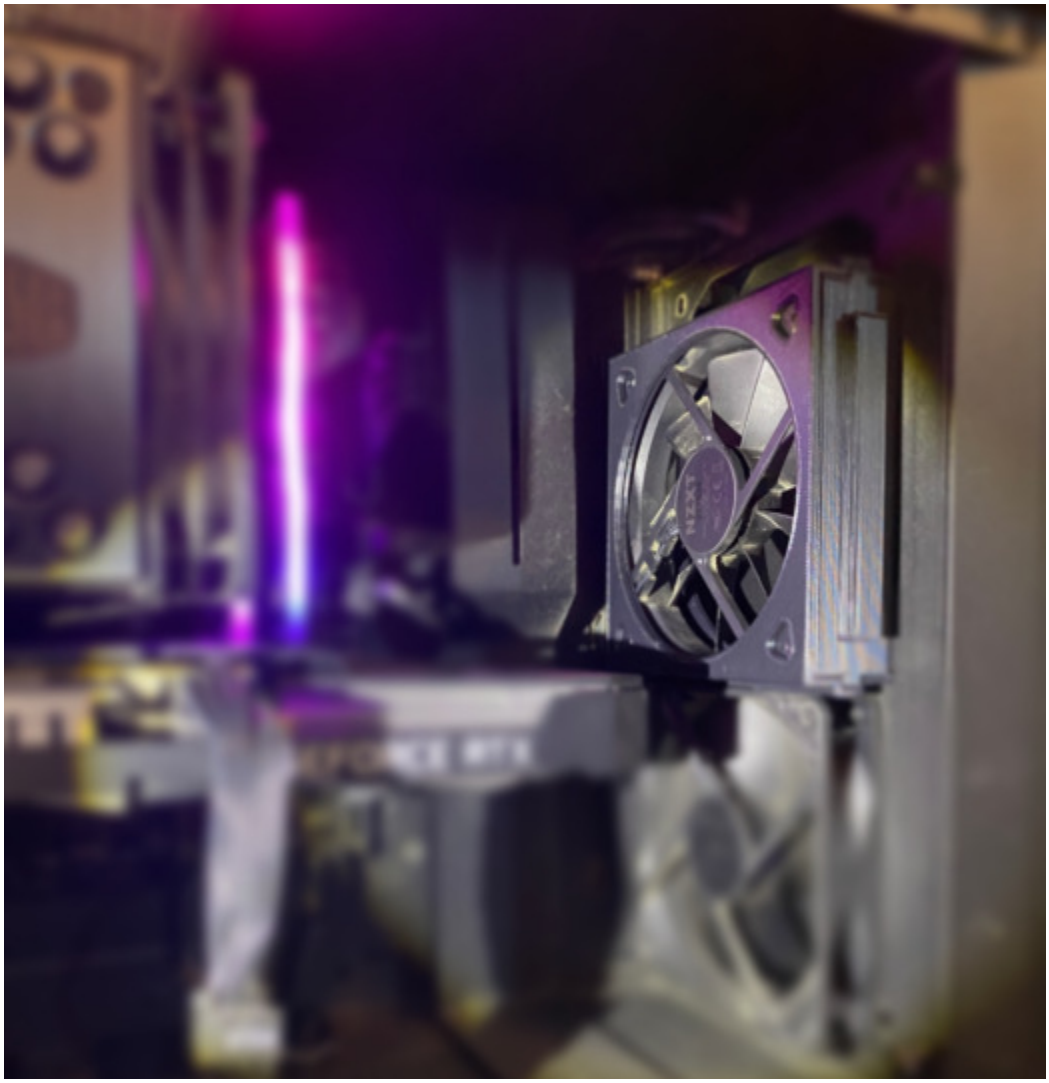

Figure 1: Prototype Mounted Within PC

Figure 2: Prototype Slide Extended

Figure 3: Prototype Slide Removed for Use

Figure 4: Prototype Slide Extends

Figure 5: Prototype

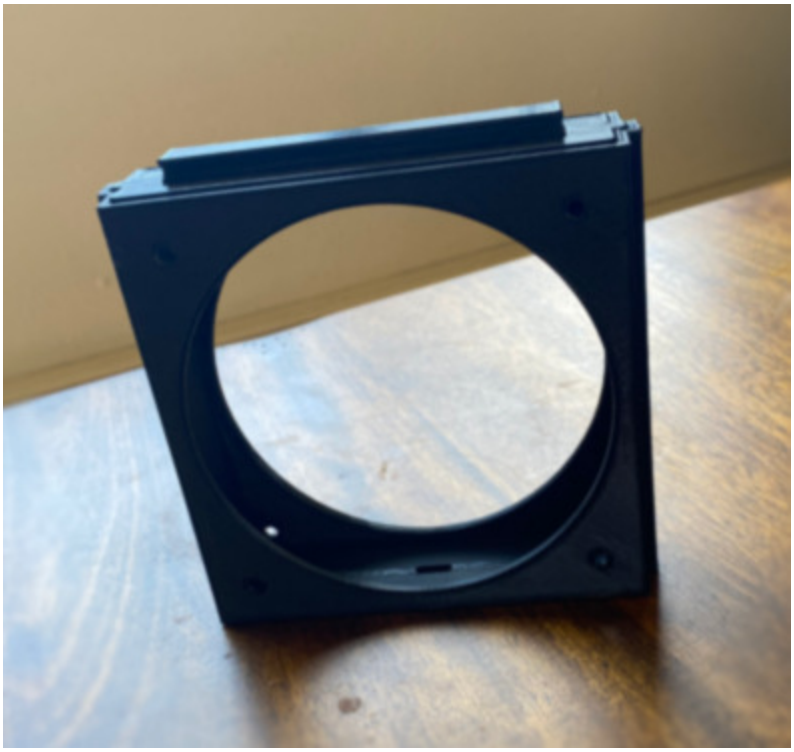

Figure 6: Prototype Without Fan

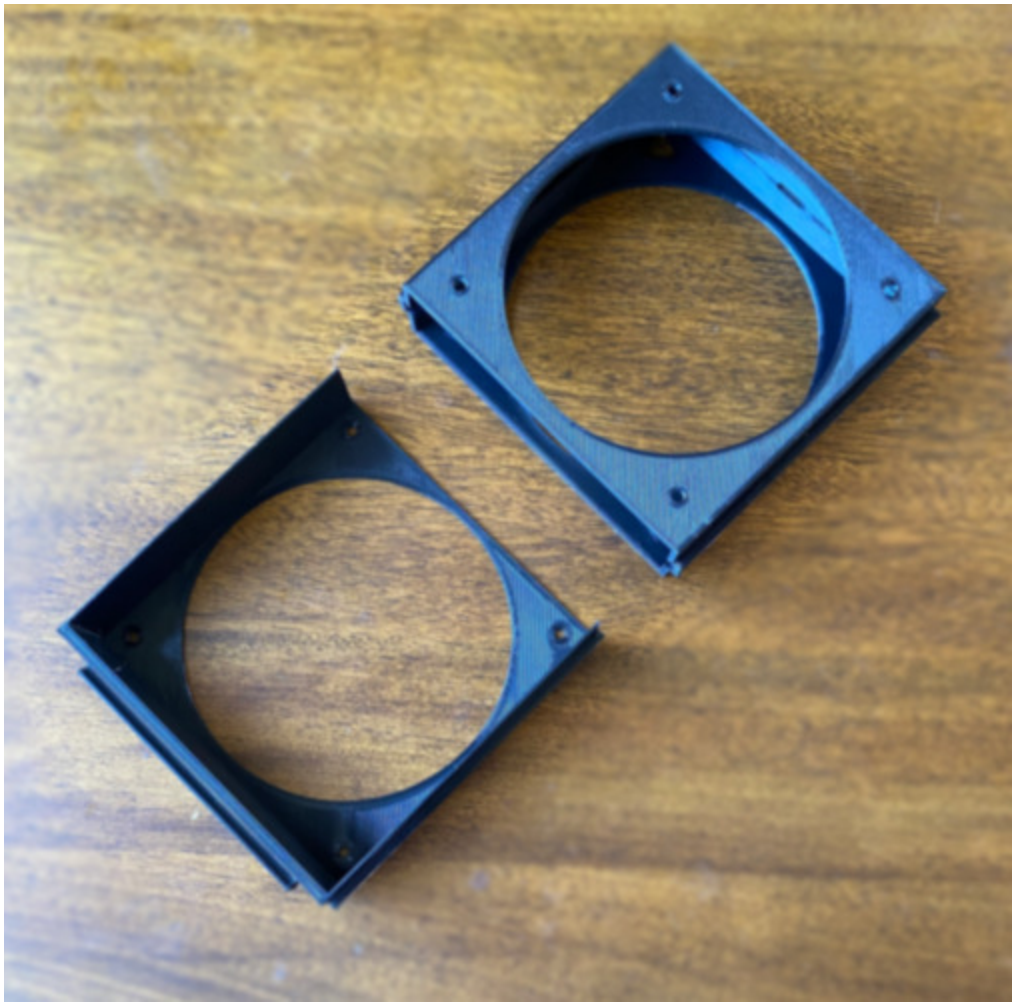

Figure 7: Prototype Components

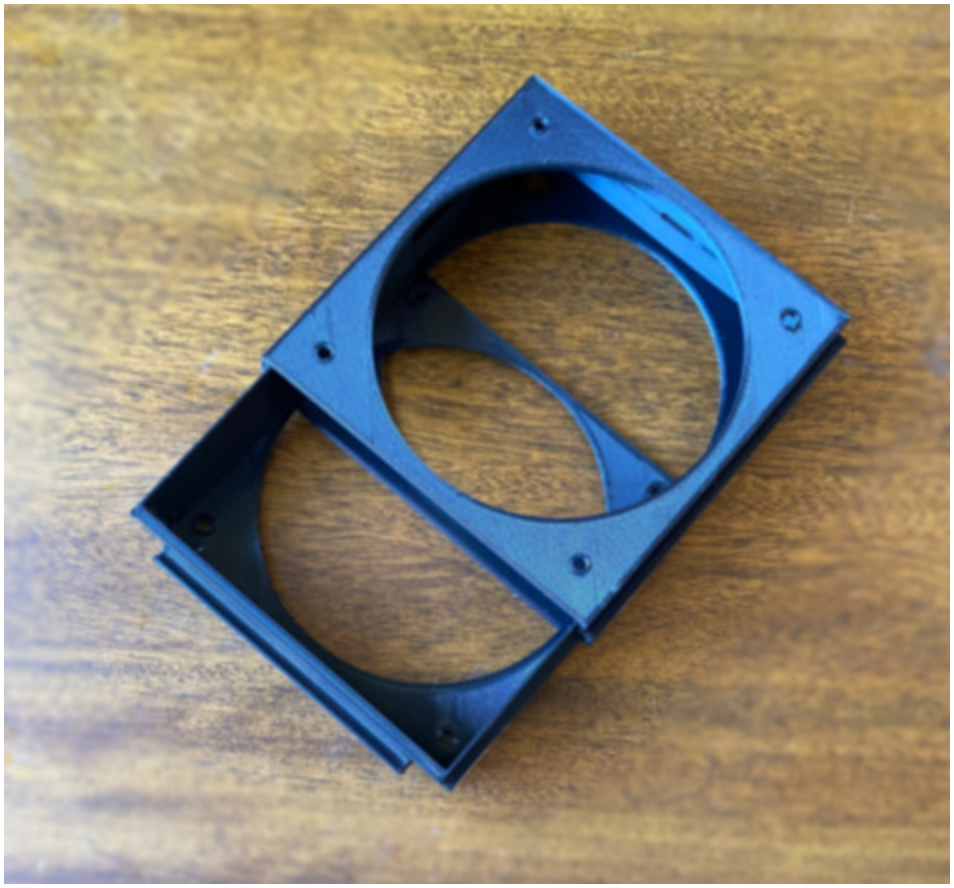

Figure 8: Prototype Assembly