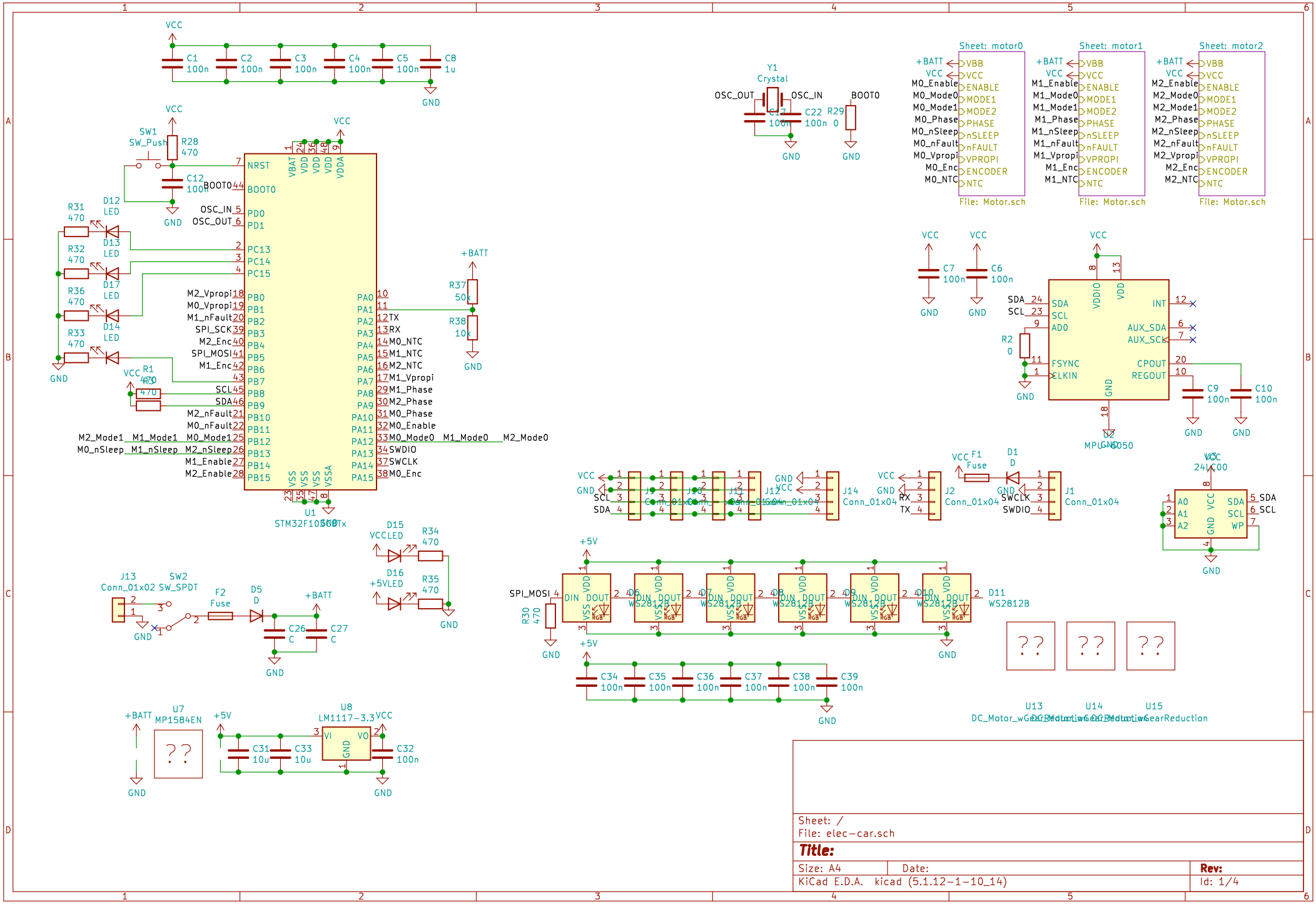
VCC
C1 100n
C2 100n
C3 100n
C4 100n
C5 100n
C8 1u
GND
SW1 SW_Push
R28 470
C12 100n
BOOT0
OSC_IN
OSC_OUT
D12 LED
R31 470
D13 LED
R32 470
D17 LED
R36 470
D14 LED
R33 470
R1 470
R1 470
U1 STM32F103C8T6
NRST
BOOT0
PD0
PD1
PC13
PC14
PC15
PB0
PB1
PB2
PB3
PB4
PB5
PB6
PB7
PB8
PB9
PB10
PB11
PB12
PB13
PB14
PB15
PA0
PA1
PA2
PA3
PA4
PA5
PA6
PA7
PA8
PA9
PA10
PA11
PA12
PA13
PA14
PA15
VBAT
VDD
VDDA
VSS
VSSA
M2_Vpropi
M0_Vpropi
M1_nFault
SPI_SCK
M2_Enc
SPI_MOSI
M1_Enc
SCL
SDA
M2_nFault
M0_nFault
M2_Mode1
M1_Mode1
M0_Mode1
M0_nSleep
M1_nSleep
M2_nSleep
M1_Enable
M2_Enable
TX
RX
M0_NTC
M1_NTC
M2_NTC
M1_Vpropi
M1_Phase
M2_Phase
M0_Phase
M0_Enable
M0_Mode0
M1_Mode0
M2_Mode0
SWDIO
SWCLK
M0_Enc
+BATT
R37 50k
R38 10k
Y1 Crystal
C17 100n
C22 100n
R29 0
Sheet: motor0
Sheet: motor1
Sheet: motor2
File: Motor.sch
VBB
ENABLE
MODE1
MODE2
PHASE
nSLEEP
nFAULT
VPROPI
ENCODER
NTC
C7 100n
C6 100n
R2 0
SDA
SCL
AD0
VDDIO
INT
AUX_SDA
AUX_SCL
FSYNC
CLKIN
CPOUT
REGOUT
C9 100n
C10 100n
U2 MPU-6050
J14 Conn_01x04
J2 Conn_01x04
J1 Conn_01x04
F1 Fuse
D1 D
U3 24LC00
A0
A1
A2
WP
J13 Conn_01x02
SW2 SW_SPDT
F2 Fuse
D5 D
C26 C
C27 C
D15 VCCLED
R34 470
D16 +5VLED
R35 470
R30 470
D11 WS2812B
DIN
DOUT
C34 100n
C35 100n
C36 100n
C37 100n
C38 100n
C39 100n
U13 DC_Motor_wGearReduction
U14 DC_Motor_wGearReduction
U15 DC_Motor_wGearReduction
U7 MP1584EN
U8 LM1117-3.3
VI
VO
C31 10u
C33 10u
C32 100n
Sheet: /
File: elec-car.sch
Title:
Size: A4
Date:
Rev:
KiCad E.D.A. kicad (5.1.12-1-10_14)
Id: 1/4

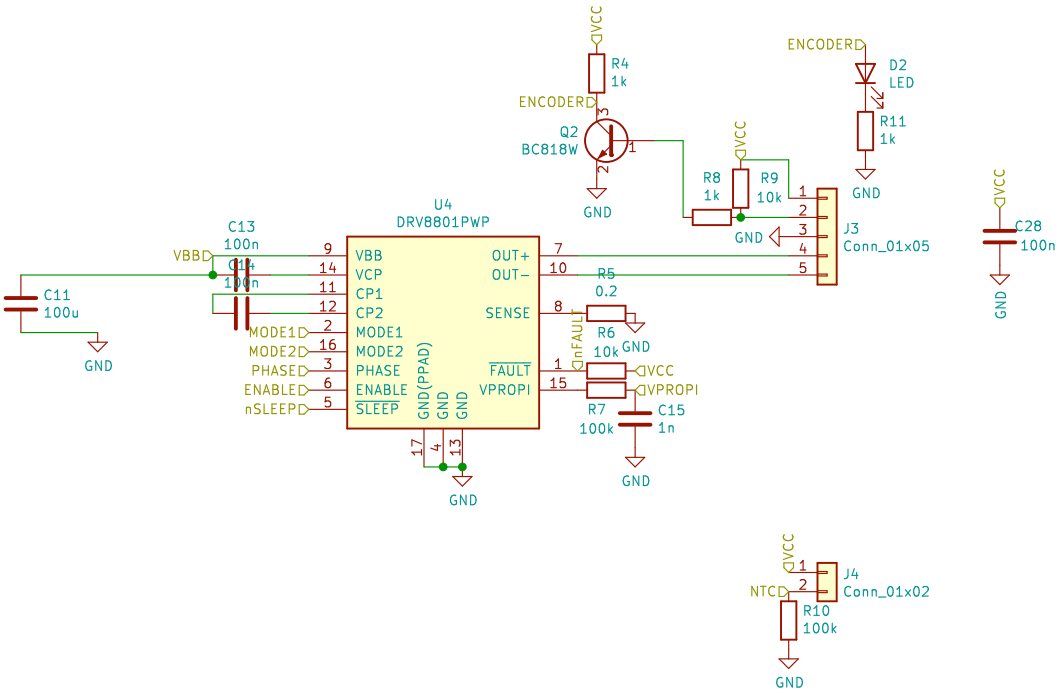

Sheet: /motor2/
File: Motor.sch

Title:

Size: A4	Date:	Rev:
KiCad E.D.A. kicad (5.1.12-1-10_14)		Id: 2/4

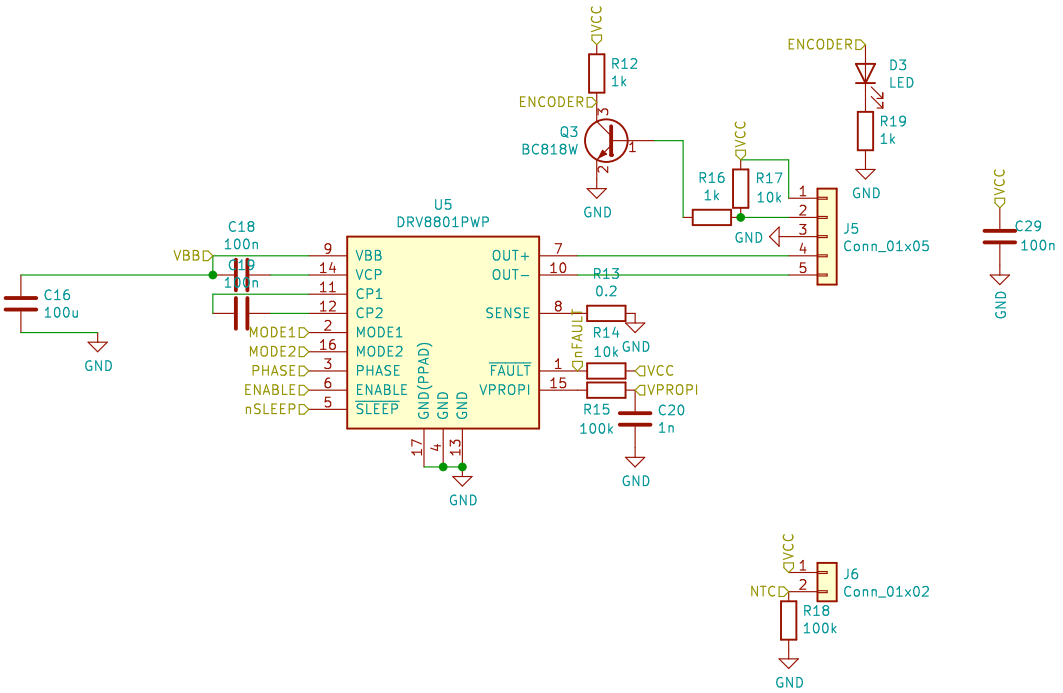

Sheet: /motor1/
File: Motor.sch

Title:

Size: A4	Date:	Rev:
KiCad E.D.A. kicad (5.1.12-1-10_14)		Id: 3/4

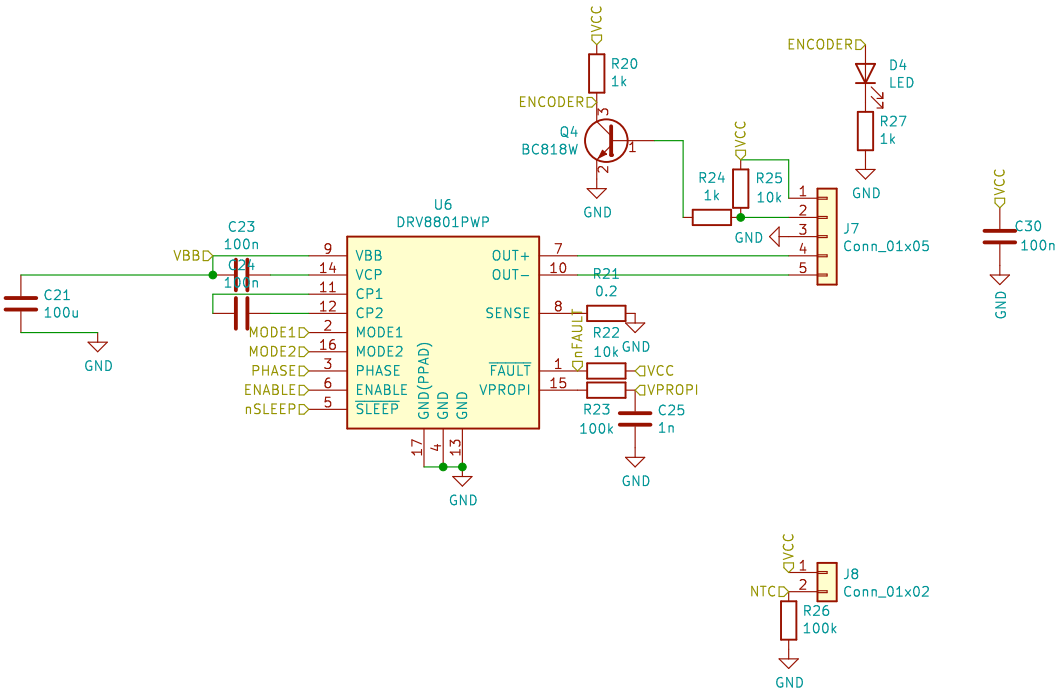

Sheet: /motor0/
File: Motor.sch

Title:

Size: A4	Date:	Rev:
KiCad E.D.A. kicad (5.1.12-1-10_14)		Id: 4/4