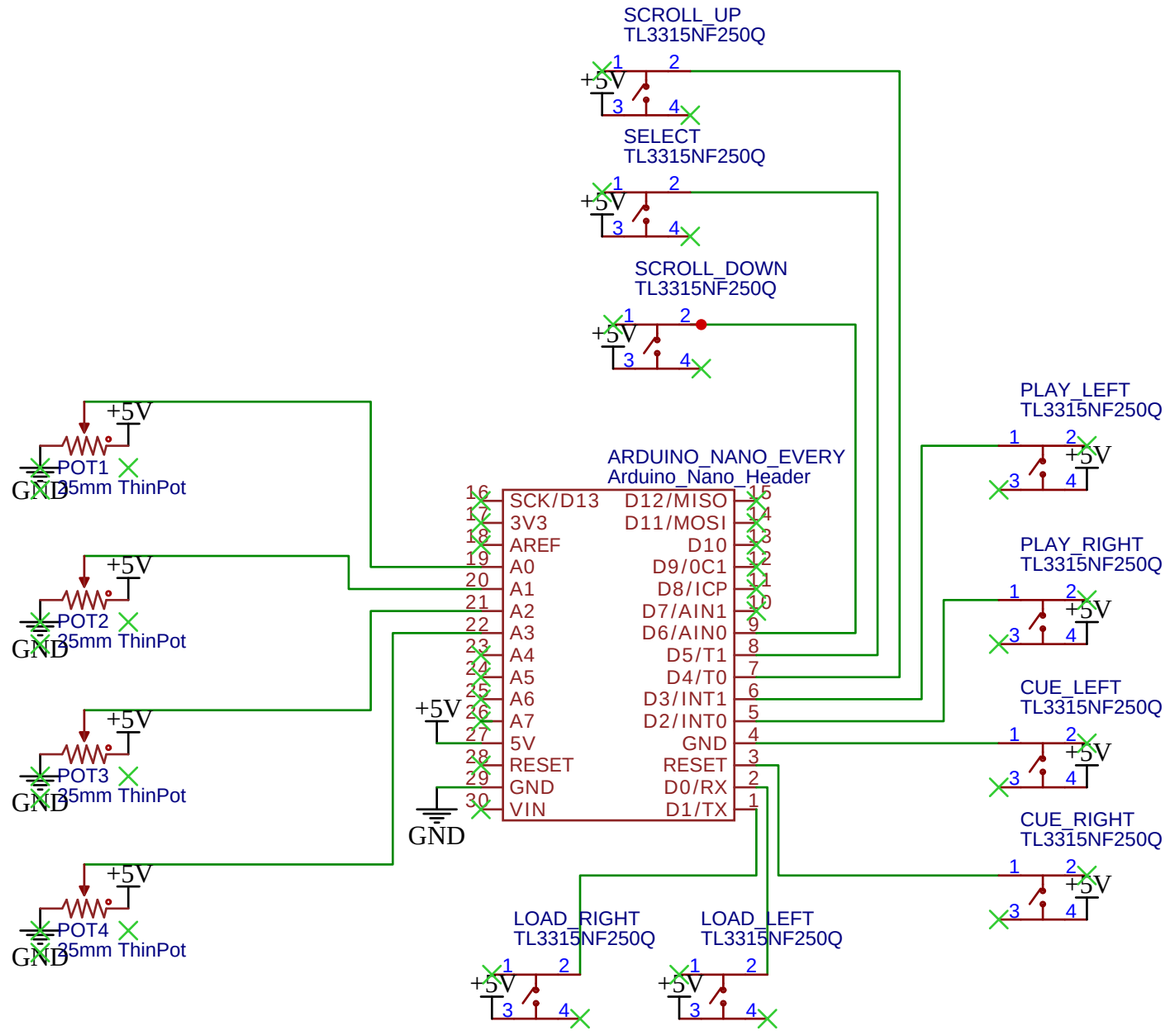

TITLE: DJ Controller Single PCB		REV: 1.1
	Company: Josh Engert	Sheet: 1/1
	Date: 2022-05-03 Drawn By: Josh Engert	