Pin Diagrams and Their Truth Tables:

AND Gate **TRUTH TAB**

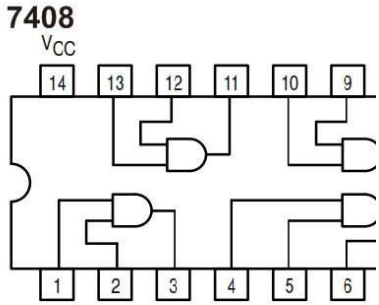

AND		
A	B	Y=A.B
0	0	0
0	1	0
1	0	0
1	1	1

OR Gate: 7432 **TRUTH TABLE**

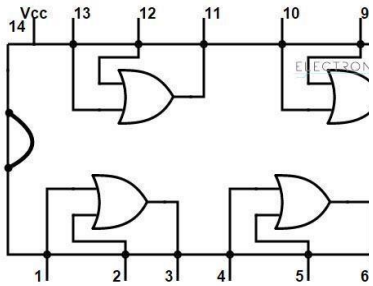

OR		
A	B	Y=A.B
0	0	0
0	1	1
1	0	1
1	1	1

NOT Gate: 7404**TRUTH TABLE**

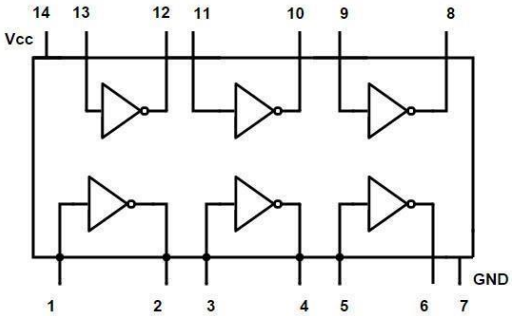

NOT Gate	
A	Y=A’
0	1
1	0

1. Verification of Truth Tables of Logic Gates

Aim: To study and verify the truth table of logic gates.

Two input (i) OR (ii) AND (iii) NOT (iv) NOR (v) NAND (vi) Exclusive OR

(vii) Exclusive NOR

Components Required:

1. Digital IC trainer kit.
2. IC 7408, IC 7404, IC 7400,IC 7432,IC 7406,IC 7402,IC 7486
3. Connecting wires.

Theory:

In the digital circuits, two discrete voltages are recognized as two logic levels, logic '1' and logic '0'. These are also known as 'high' and 'low' logic levels. Circuits that process digital signal and take logical decisions are called logic gates. Each gate has two or more inputs and one output terminal. The output wave form at any instant depends only upon the input waveform at that instant. Such circuits are called combinational logic circuit. The logic gates Transistor Logic (RTL), Diode Transistor Logic (DTL), Transistor Transistor Logic (TTL) and Emitter Coupled Logic (ECL). The last two types are in wide use and are available in IC version. The three basic logic gates are OR gate, AND gate, and NOT gate.

AND-Gate:

AND gate has two or more inputs and only one output. If the both the inputs are 1 the output is 1. If any one of the inputs is 0 the output is 0. Thus the output of the AND Gate is equal to the product of the input. The output can be expressed Y=A.B.

OR-Gate:

OR gate has two or more inputs and only one output. If the both the inputs are 1 the output is 1. When both of the inputs are 0 the output is 0. Thus the output of the Or gate is equal to the sum of the input. The output can be expressed as Y=A+B.

NAND gate: 7400**TRUTH TABLE**

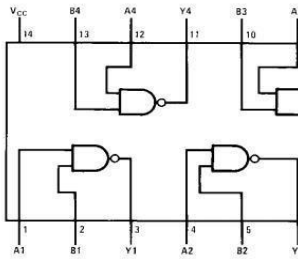

NAND g ate		
A	B	Y=
0	0	1
0	1	1
1	0	1
1	1	0

NOR Gate: 7402**TRUTH TABLE**

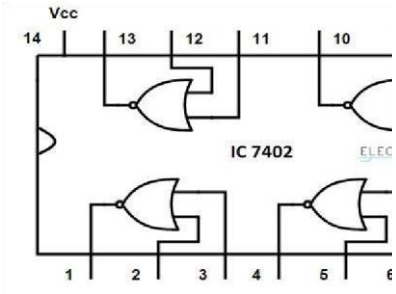

NOR Gate: 7402		
A	B	Y=
0	0	1
0	1	0
1	0	0
1	1	0

EX-OR Gate:7486 **TRUTH TABL**

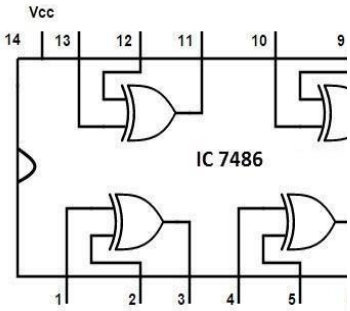

EX-OR Gate		
A	B	Y=
0	0	0
0	1	1
1	0	1
1	1	0

EX-NOR Gate: 74266

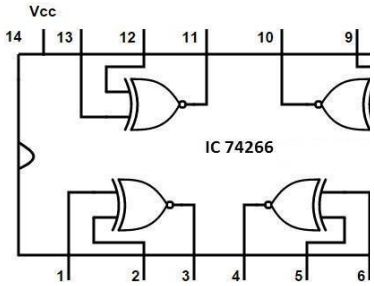

TRUTH TABLE

EX-NOR Gate		
A	B	Y=
0	0	1
0	1	0
1	0	0
1	1	1

NOT-Gate:

A NOT gate has only one input and one output. The NOT gate is also known as an Inverter Gate or Complement. The output of the not gate is complement of input. The output can be Expressed as Y=A'

NAND-Gate:

NAND gate has two or more inputs and only one output. The NAND operation also be performed if a combination of an AND gate and a NOT gate. If any one of the input is 0 is the output is 1. In all other cases the output is 0. The output can be expressed as Y=A.B.

NOR-Gate:

NOR gate has two or more inputs and only one output. The NOR operations can also be Performed if a combination of an OR gate and a NOT gate. If any one of the input is 1 is the Output is 0. In all other cases the output is 1. The output can be expressed as Y=A+B.

EX-OR Gate:

The output of an Exclusive-OR gate **ONLY** goes "HIGH" when its two input terminals are at "**DIFFERENT**" logic levels with respect to each other.

An odd number of logic "1's" on its inputs gives logic "1" at the output. These two inputs can be at logic level "1" or at logic level "0" giving us the Boolean expression of: $Q = (A \oplus B) = A.B + A.B$

EX-NOR Gate:

Basically the "Exclusive-NOR" gate is a combination of the Exclusive-OR gate and the NOT gate but has a truth table similar to the standard NOR gate in that it has an output that is normally at logic level "1" and goes "LOW" to logic level "0" when **ANY** of its inputs are at logic level "1".

However, an output "1" is only obtained if both of its inputs are at the same logic level, either binary "1" or "0". For example, "00" or "11". This input combination would then give us the $Q = \overline{(A \oplus B)} = \overline{A.B} + A.B$

Procedure:

1. Check the components for their working.
2. Insert the appropriate IC into the ICbase.
3. Make connections as shown in the circuit diagram.
4. Provide the input data via the input switches and observe the output on outputLEDs
5. Tabulate the values for different input combinations.

Result: Hence studied and verified the truth table of logic gates. Two input (i) OR (ii) AND (iii) NOT (iv) NOR (v) NAND (vi) Exclusive OR (vii) Exclusive NOR

2. Design a Simple Combinational Circuit with Four Variables, Obtain Minimal Sop Expression and Verify the Truth Table

Aim: Design and implement a simple combinational circuit with four variables and obtain Minimal SOP expression and verify the truth table using Digital Trainer Kit.

Components Required:

1. Logic gates (IC) trainer kit.
2. Connecting patch chords.
3. IC 7408, IC 7404

Theory:

The minimization will result in reduction of the number of gates (resulting from less number of terms) and the number of inputs per gate (resulting from less number of variables per term) • the minimization will reduce cost, efficiency and power consumption.

The minimum sum of products (MSOP) of a function, f, is a SOP representation of f that contains the fewest number of product terms and fewest number of literals of any SOP representation of f.

Ex:f= (ABCD +A`BCD+ AB`CD+ …..) is called sum of products. The + is sum operator which is an OR gate. The product such as AB is an AND gate for the two inputs A and B.

Simplified Logic Diagram:

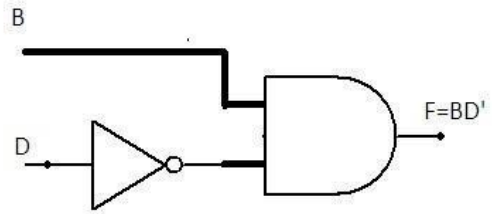

TRUTH TABLE:

A	B	C	D	Given function	Minimal function
0	0	0	0		
0	0	0	1		
0	0	1	0		
0	0	1	1		
0	1	0	0		
0	1	0	1		
0	1	1	0		
0	1	1	1		
1	0	0	0		
1	0	0	1		
1	0	1	0		
1	0	1	1		
1	1	0	0		
1	1	0	1		
1	1	1	0		
1	1	1	1		

Procedure:

1. Check the components for their working.
2. Insert the appropriate IC into the ICbase.
3. Make connections as shown in the circuit diagram.
4. Provide the input data via the input switches and observe the output on outputLEDs
5. Tabulate the values for different input combinations.

3. Design Full Adder Circuit And Verify ItsFunctional Table.

Aim: To design full adder using logic gates and to verify the truth table.

Apparatus Required:

1. IC7486, IC7408, IC7432.
2. Digital IC Trainer Kit.
3. Patch Chords Single Lead Wires

Theory:

A full adder is a combinational circuit that forms the arithmetic sum of input; it consists of three inputs and two outputs. A full adder is useful to add three bits at a time but a half adder cannot do so. In full adder sum output will be taken from X-OR Gate, carry output will be taken from OR gate.

Procedure:

1. Verify the gates.
2. Make the connections as per the circuit diagram.
3. Switch on VCC and apply various combinations of input according to truth table. Note down the output readings for half/full adder, Sum and the carry bit for different combinations of inputs verify their truth tables.

Functional Diagram:

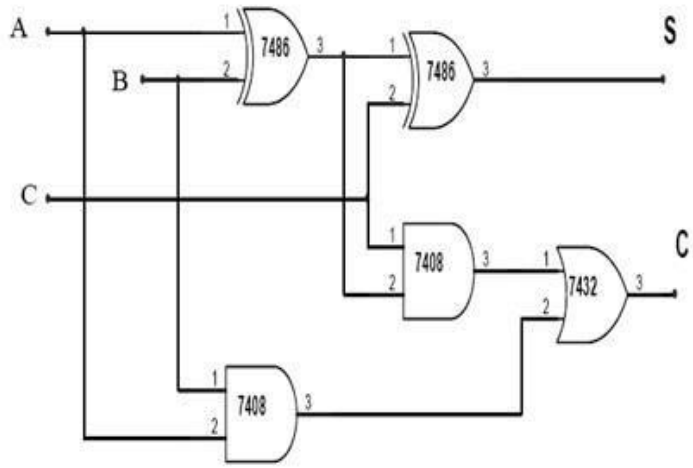

Truth table:

Input s			Outputs	
A	B	C-in	Sum	C-out
0	0	0	0	0
0	0	1	1	0
0	1	0	1	0
0	1	1	0	1
1	0	0	1	0
1	0	1	0	1
1	1	0	0	1
1	1	1	1	1

4. Verification of Functional Table Of 3 to 8 Line Decoder /De-Multiplexer

Aim: verify the truth table of 3 to 8 line Decoder/De-Multiplexer

Components Required:

1. Digital IC trainer Kit
2. Connecting Wires
3. IC 74138, IC 74139

Theory:

This decoder circuit gives 8 logic outputs for 3 inputs and has a enable pin. The circuit is designed with AND and NAND logic gates. It takes 3 binary inputs and activates one of the eight outputs. 3 to 8 line decoder circuit is also called as binary to an octal decoder.

A de-multiplexer is a combinational logic circuit that receives the information on a single input and transmits the same information over one of 2^n possible output lines. The bit combinations of the select lines control the selection of specific output line to be connected to the input at given instant

Procedure:

1. Check the components for theirworking.
2. Insert the appropriate IC into the ICbase.
3. Make connections as shown in the circuitdiagram.
4. Provide the input data via the input switches and observe the output on outputLEDs. 5. Tabulate the output values for different selection input combinations.

Pin Diagram(3 to 8 decoder):

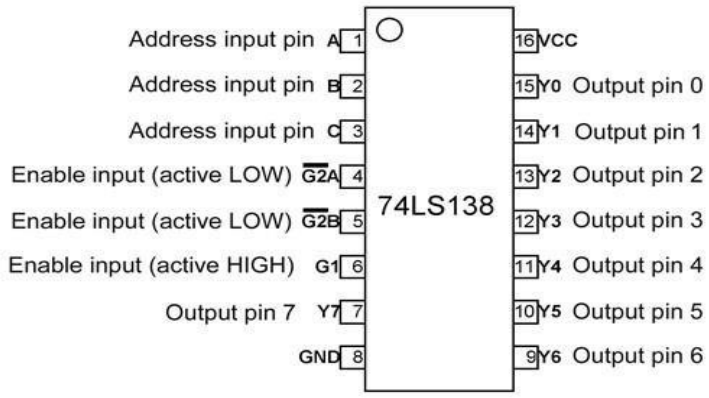

TRUTH TABLE

INPUTS						OUTPUTS							
ENABLE			SELECT										
G2A'	G2B'	G1	C	B	A	0	1	2	3	4	5	6	7
1	X	X	X	X	X	1	1	1	1	1	1	1	1
X	1	X	X	X	X	1	1	1	1	1	1	1	1
X	X	0	X	X	X	1	1	1	1	1	1	1	1
0	0	1	0	0	0	**0**	1	1	1	1	1	1	1
0	0	1	0	0	1	1	**0**	1	1	1	1	1	1
0	0	1	0	1	0	1	1	**0**	1	1	1	1	1
0	0	1	0	1	1	1	1	1	**0**	1	1	1	1
0	0	1	1	0	0	1	1	1	1	**0**	1	1	1
0	0	1	1	0	1	1	1	1	1	1	**0**	1	1
0	0	1	1	1	0	1	1	1	1	1	1	**0**	1
0	0	1	1	1	1	1	1	1	1	1	1	1	**0**

DEMULTIPLEXER:

Pin Diagram:

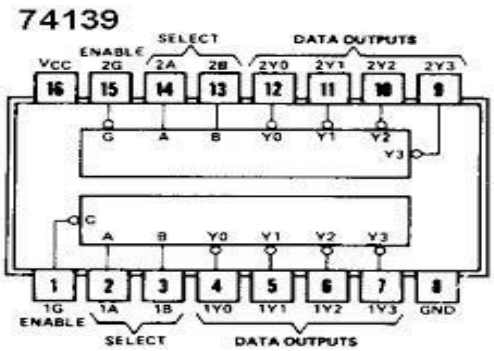

Functional Diagram:

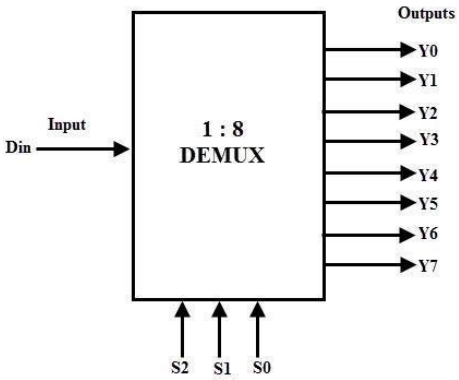

Truth table:

DATA INPUT	SELECT INPUTS			OUTPUTS							
D_{in}	S2	S1	S0	Y7	Y6	Y5	Y4	Y3	Y2	Y1	Y0
D_{in}	0	0	0	0	0	0	0	0	0	0	D_{in}
D_{in}	0	0	1	0	0	0	0	0	0	D_{in}	0
D_{in}	0	1	0	0	0	0	0	0	D_{in}	0	0
D_{in}	0	1	1	0	0	0	0	D_{in}	0	0	0
D_{in}	1	0	0	0	0	0	D_{in}	0	0	0	0
D_{in}	1	0	1	0	0	D_{in}	0	0	0	0	0
D_{in}	1	1	0	0	D_{in}	0	0	0	0	0	0
D_{in}	1	1	1	D_{in}	0	0	0	0	0	0	0

5. Four variable logic function using 8 To1 Multiplexer.

Aim: To design and observe the truth table of four variable logic function using 8 To 1 Multiplexer using IC74153 (MUX).

Components Required:

1. IC 74151
2. Patch Cords & Single Lead Wires
3. Digital IC Trainer Kit.

Theory:

An 8-to-1 multiplexer consists of eight data inputs D0 through D7, three input select lines S2 through S0 and a single output line Y. Depending on the select lines combinations, multiplexer decodes the inputs. The below figure shows the block diagram of an 8-to-1 multiplexer with enable input that enable or disable the multiplexer. Since the number data bits given to the MUX are eight then 3 bits (23=8) are needed to select one of the eight data bits. The truth table for an 8to1 multiplexer is given below with eight combinations of inputs so as to generate each output corresponds to input.For example, if S2= 0, S1=1 and S0=0 then the data output Y is equal to D2. Similarly the data outputs D0 to D7 will be selected through the combinations of S2, S1 and S0 as shown in below figure.

For a 4 variable function, there are 16 possible combinations. To implement 4 variable function using 8:1 MUX, use 3 input as select lines of MUX and remaining 4th input and function will determine its input of MUX. Let us demonstrate it with an example: **F(B,C,D,A) = Σ(1,5,7,9,10,11**

Pin Diagram:

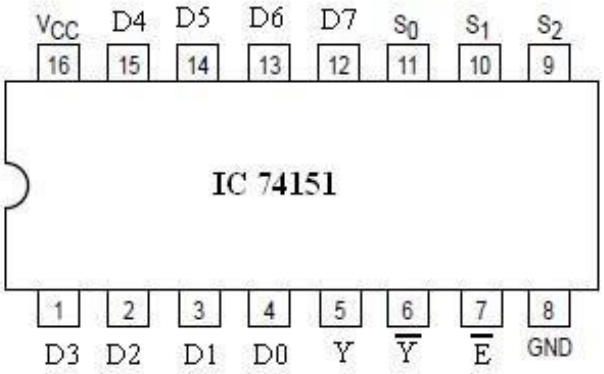

Multiplexer Functional diagram:

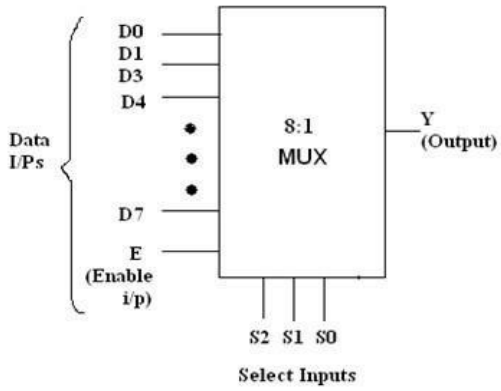

Enable	Select Inputs			Output
E	S2	S1	S0	Y
0	×	×	×	0
1	0	0	0	D0
1	0	0	1	D1
1	0	1	0	D2
1	0	1	1	D3
1	0	0	0	D4
1	0	0	1	D5
1	0	1	0	D6
1	0	1	1	D7

Logical diagram for given function using Multiplexer

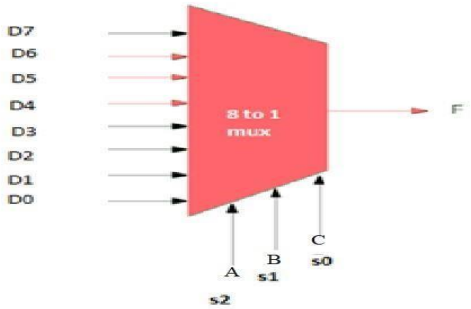

Truth Table for Given Function:

A		B	C	D	Decimal equivalent	F	Remark
0		0	0	0	0	0	F=D
0		0	0	1	1	1	
0		0	1	0	2	0	F=0
0		0	1	1	3	0	
0		1	0	0	4	0	F=D
0		1	0	1	5	1	
0		1	1	0	6	0	F=D
0		1	1	1	7	1	
1		0	0	0	8	0	F=0
1		0	0	1	9	0	
1		0	1	0	10	1	F=1
1		0	1	1	11	1	
1		1	0	0	12	0	F=0
1		1	0	1	13	0	
1		1	1	0	14	0	F=0
1		1	1	1	15	0	

Procedure:

1. Check the components for their working.
2. Insert the appropriate IC into the ICbase.
3. Make connections as shown in the circuitdiagram.
4. Provide the input data via the input switches and observe the output on outputLEDs.
5. Connect the inputs and selections lines according to implement four variable function.
6. Tabulate the values for different input combinati

6. One Bit Comparator

Aim: Draw the circuit diagram of a single bit comparator and test the output.

Components Required:

1.IC 7485, IC 7400, IC 7410, IC 7420, IC 7432, IC 7486, IC 7402, IC 7408, IC 7404,

2.Digital IC Trainer kit

3.patch cards

4.single lead wires

Theory:

Magnitude Comparator is a logical circuit, which compares two signals A and B and generates three logical outputs, whether A > B, A = B, or A < B. IC 7485 is a high speed 4-bit Magnitude comparator, which compares two 4-bit words. The A = B Input must be held high for proper compare operation.

Functional Diagram:

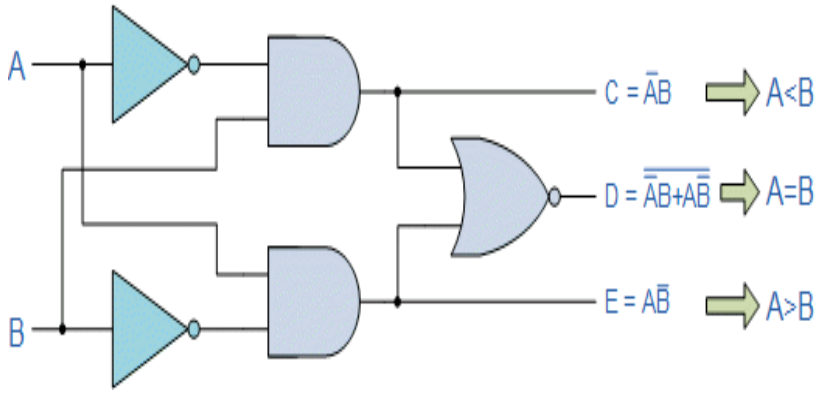

Pin Diagram:

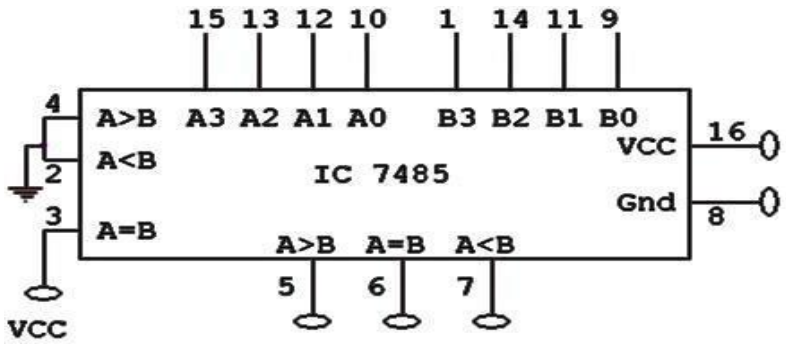

TRUTH TABLE

INPUTS		OUTPUTS		
A	B	A > B	A = B	A < B
0	0	0	1	0
0	1	0	0	1
1	0	1	0	0
1	1	0	1	0

Procedure:

1. Check all the components for their working.
2. Insert the appropriate IC into the IC base.
3. Make connections as shown in the circuit diagram.
4. Apply two inputs which you want to compare to input switches and ground the all unnecessary inputs.
5. Connect three comparison outputs A=B, A>B, A<B to output LEDs.
6. Apply different inputs. Observe outputs for different input combinations and tabulate in the tabular form.

7.Verification of Functional Tables of Flip Flops

Aim: To verify the truth table of J-K flip-flop-JK master Slave flip-flop, and D flip-flop.

Apparatus:

1. Digital IC Trainer kit.
2. Patch cards.
3. Single lead wires.
4. JK flip-flop IC7476,
5. D flip flop IC 7474

Theory:

JK Flip-Flop:

This simple **JK flip Flop** is the most widely used of all the flip-flop designs and is considered to be a universal flip-flop circuit. The sequential operation of the JK flip flop is exactly the same as for the previous SR flip-flop with the same "Set" and "Reset" inputs. The difference this time is that the "JK flip flop" has no invalid or forbidden input states of the SR Latch even when S and R are both at logic"1".

The Master-Slave JK Flip-flop:

The **Master-Slave Flip-Flop** is basically two gated SR flip-flops connected together in a series configuration with the slave having an inverted clock pulse. The outputs from Q and Q from the "Slave" flip-flop are fed back to the inputs of the "Master" with the outputs of the "Master" flip flop being connected to the two inputs of the "Slave" flip flop. This feedback configuration from the slave's output to the master's input gives the characteristic toggle of the JK flip flop as shown in the circuit diagram.

Race-Around Condition In J-K Flip Flop:

Practically, we don't get toggling. Since, clock pulse is more than the propagation delay, so within one clock pulse the output will keep on toggling again and again and it may become indeterminate. This is known as race around condition. Race Around condition occurs because of the feedback connection

D (DELAY) FLIP-FLOP:

The D (Delay) flip-flop is used for storing the information. It is basically an RS flip-flop with an inverter in the R input. Fig. shows a clocked D flip-flop. NAND gates 1 and 2 from a basic RS flip-flop and gates 3 and 4 modify it into a clocked RS flip-flop. The D input is to the S input and its complement through gate 5 is applied to the R input. The D flip-flop is often called a 'delay flip-flop'. The word 'delay' describes what happens to the data or information at input D. In other words, the data, i.e. 0 or 1 at the input D is delayed by one clock pulse from getting to outputQ.

Procedure:

1. Take the required flip flop IC and place on bread board
2. Connect the JK/D inputs to input switches.
3. Connect the outputs to output LEDS.
4. apply +5V DC power to Vcc and ground Pins of IC
5. Connect the clock and check outputs for each input combinations and tabulate the val

FunctionalDiagram:

JK flip flop:

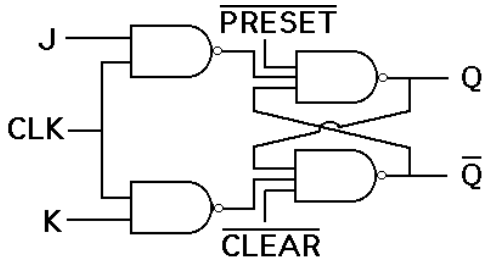

JK master slave flip flop:

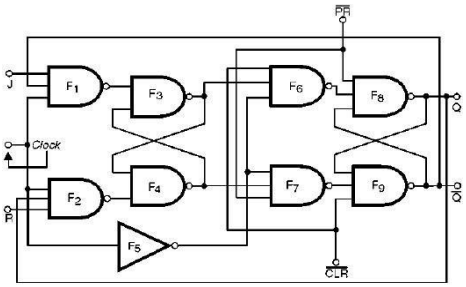

Figura 13 - *Flip-flop J-K com Preset e Clear.*

D flip flop:

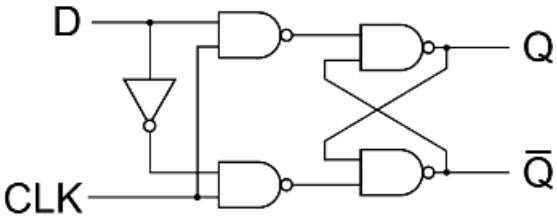

IC Pin diagram:

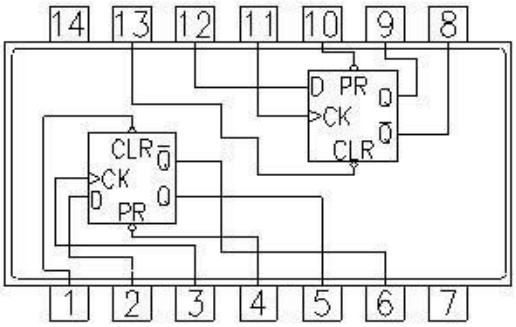

7474
Dual D Flip-Flop
with Preset and Clear

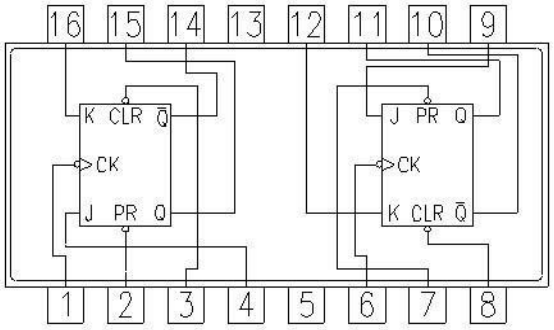

7476
Dual J/K M/S Flip-Flop
with Preset and Clear

.

Truth Tables: JK Flip flop

CLK	J	K	Q	Q’	STATE
0	X	X	Q	Q’	NO CHANGE
1	0	0	Q	Q’	NO CHANGE
1	0	1	0	1	Reset Q to 0
1	1	0	1	0	Set Q to 1
1	1	1	-	-	Toggle

Truth Tables: D Flip flop

CLK	D	Q	Q’	STATE
0	x	Q	Q’	NO CHANGE
1	0	0	1	Reset Q to 0
1	0	1	0	Set Q to 1

8 Design a Four Bit Ring Counter Using D Flip – Flops / JK Flipflop and Verify Output

Aim: verify the truth tables of 4 bit ring counter using D flip-flops/ JK Flip-flop.

Components Required:

1. IC 7474/7476
2. IC Trainer kit
3. patch cards
4. single lead wires

Theory:

Ring counter is a typical application of Shift resister. Ring counter is almost same as the shift counter. The only change is that the output of the last flip-flop is connected to the input of the first flip-flop in case of ring counter but in case of shift resister it is taken as output. Except this all the other things are same.

Procedure:

1. Take corresponding flip flop ICs as required quantity.
2. Place the ICs on trainer kit bread board and interconnect as per circuit diagram. 3. Apply DC power supply to VCC and GND pins of ICs
4. Connect all four outputs to output LEDs and clock from clock output of the kit.
5. And tabulate the output count by applying clock pulses.

Functional diagram:

Four Bit Ring Counter Using D Flip – Flops

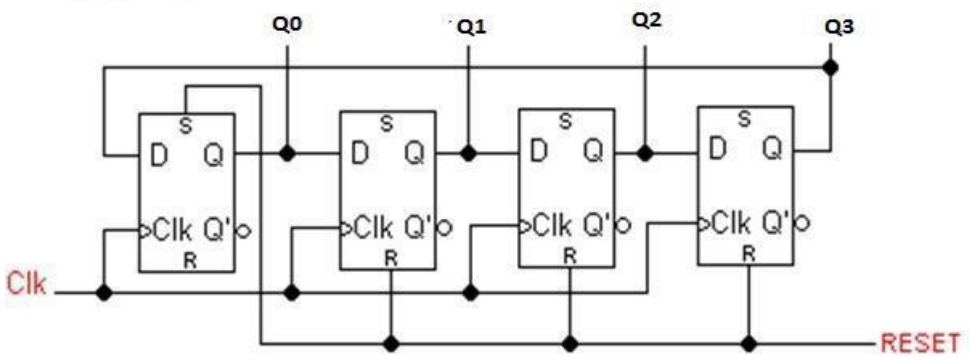

Four Bit Ring Counter Using JK Flip – Flops

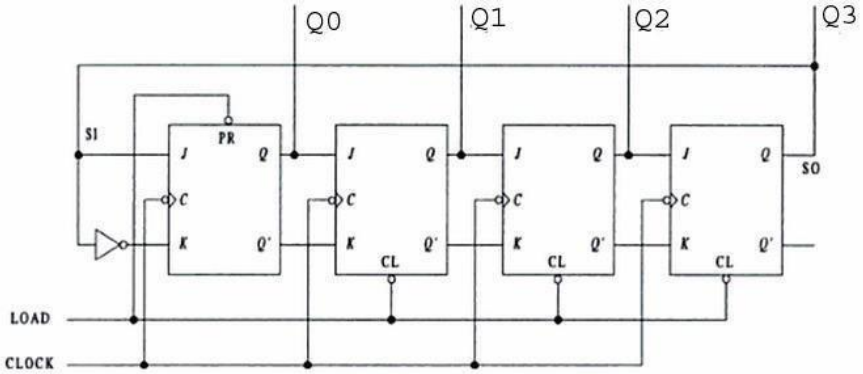

Truth Table:

CLOCK	Q3	Q2	Q1	Q0
1	0	0	0	1
2	0	0	1	0
3	0	1	0	0
4	1	0	0	0
5	0	0	0	1
6	0	0	1	0
7	0	1	0	0
8	1	0	0	0

9. Design a Four Bit Johnson's Counter Using D Flip-Flops / JK Flip Flops and Verify Output

Aim: verify the truth tables of four bit Johnson's counter using D Flip-flop/ JK Flip- flops

Components Required:

1.IC 7474/7476

2.IC Trainer kit

3.patch cards

4.single lead wires **Theory:**

Johnson counter also known as creeping counter, is an example of synchronous counter. In Johnson counter, the complemented output of last flip flop is connected to input of first flip flop and to implement n-bit Johnson counter we require n flip-flop. It is one of the most important type of shift register counter. It is formed by the feedback of the output to its own input. Johnson counter is a ring with an inversion. Another name of Johnson counter are: creeping counter, twisted ring counter, walking counter, mobile counter and switch tail counter.

Procedure:

1. Take corresponding flip flop ICs as required quantity.
2. Place the ICs on trainer kit bread board and interconnect as per circuit diagram. 3. Apply DC power supply to VCC and GND pins of ICs
4. Connect all four outputs to output LEDs and clock from clock output of the kit.
5. And tabulate the output count by applying clock pulses.

Functional Diagram:

Johnson counter using D flip flops:

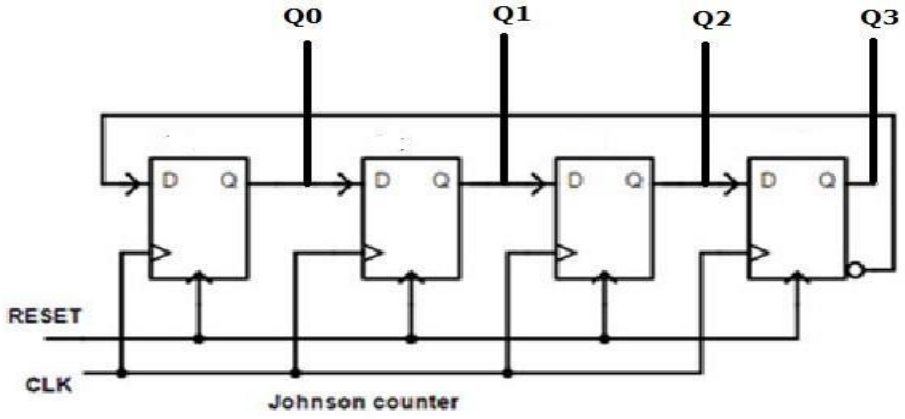

Johnson counter using JK flip flops:

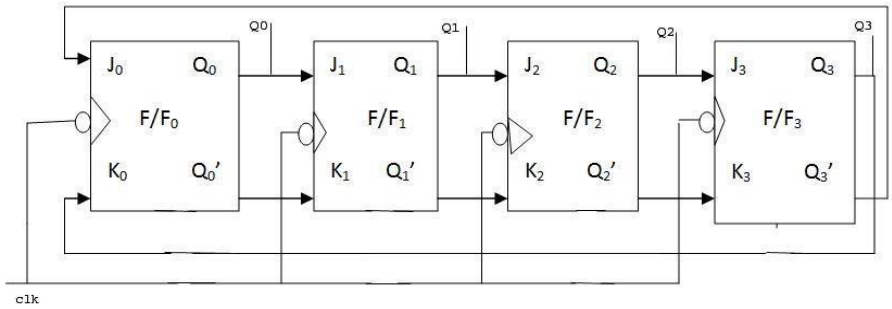

Truth Table:

CLOCK	Q3	Q2	Q1	Q0
0	0	0	0	0
1	0	0	0	1
2	0	0	1	1
3	0	1	1	1
4	1	1	1	1
5	1	1	1	0
6	1	1	0	0
7	1	0	0	0

10. Verify the Operation of 4-Bit Universal Shift Register

for Different Modes of Operation

Aim: To verify the operation of 4- Bit Universal Shift Register and observe the same for Different modes of operation.

Components Required:

1. IC 74LS194
2. Digital IC Trainer kit
3. patch chords
4. single lead wires

Theory:

A register that can store the data and /shifts the data towards the right and left along with the parallel load capability is known as a universal shift register. It can be used to perform input/output operations in both serial and parallel modes. Unidirectional shift registers and bidirectional shift registers are combined together to get the design of the universal shift register. It is also known as a parallel-in-parallel-out shift register or shift register with the parallel load.

Functional Diagram:

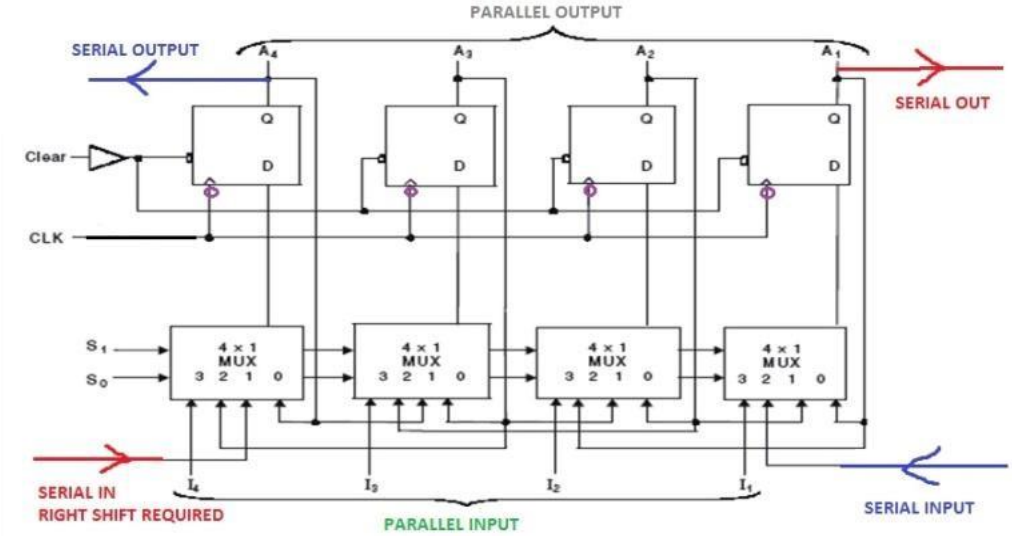

Pin Diagram: IC 74LS194

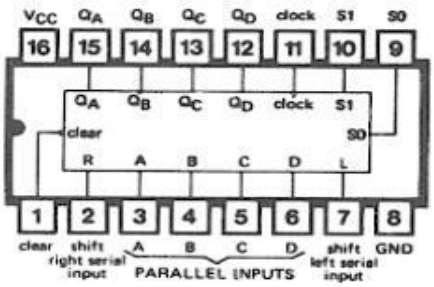

Truth Table:

S0	S1	Operating Mode
0	0	Locked
1	0	Shift-Right
0	1	Shift-Left
1	1	Parallel Loading

Procedure:

1. Connect the circuit diagram on trainer kit as shown in the diagram.
2. Select the mode by using S0, S1 of the IC to operate register in different modes.
3. Connect all parallel outputs to output LEDS. And parallel inputs to input switches.
4. Connect serial output to output led and serial input to the serial data generator.
5. To shift the data right or left select mode and apply required no. of clock pulses.
6. And observe SISO, SIPO, PISO, PIPO operations.