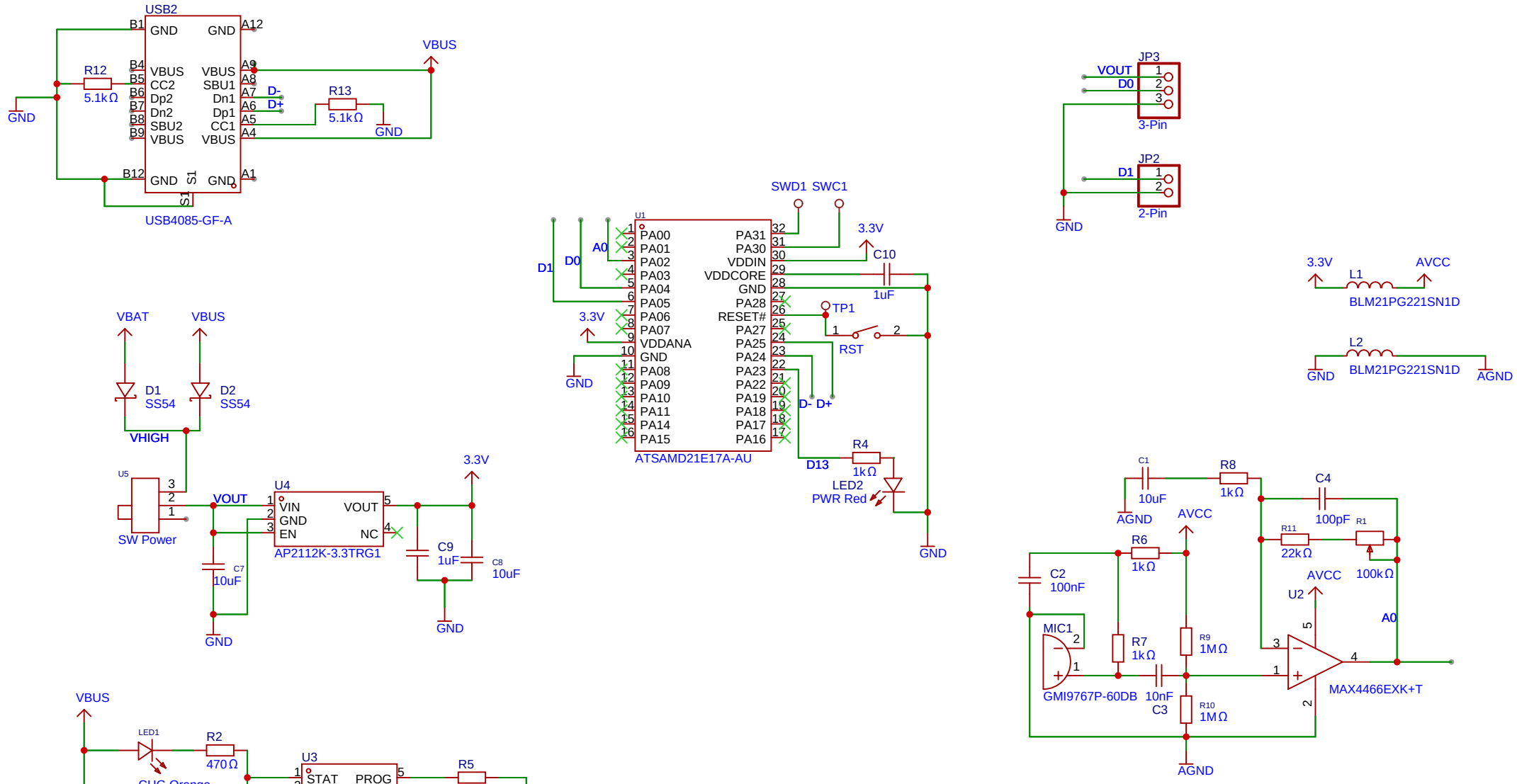

Schematic	ZL_C-TH_v1-P	Create at	2025-08-21
		Update at	2025-08-22
Board	ZL-18650-CTH-v1	Page	P1
Drawn		ZettaLights	
Reviewed			
		Version	Size	Page 1 Total 1
EasyEDA		V1.0	A4	EasyEDA.com