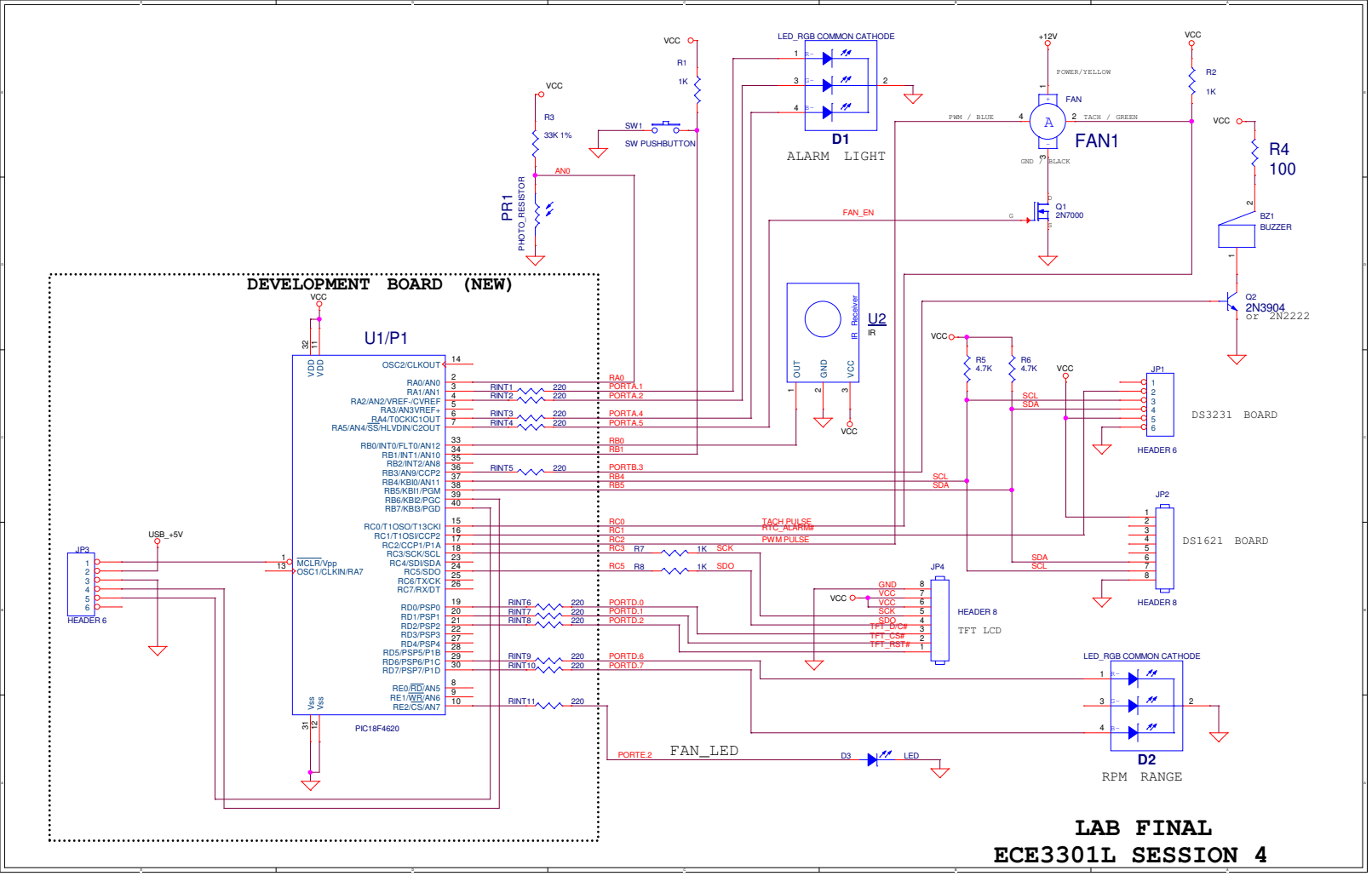
DEVELOPMENT BOARD (NEW)
U1/P1
PIC18F4620
VCC
R1
1K
SW1
SW PUSHBUTTON
R3
33K 1%
AN0
PR1
PHOTO_RESISTOR
LED_RGB COMMON CATHODE
D1
ALARM LIGHT
+12V
POWER/YELLOW
FAN
FAN1
PWM / BLUE
TACH / GREEN
GND / BLACK
R2
1K
R4
100
BZ1
BUZZER
Q1
2N7000
FAN_EN
Q2
2N3904
or 2N2222
U2
IR
OUT
GND
VCC
IR Receiver
R5
4.7K
R6
4.7K
SCL
SDA
JP1
DS3231 BOARD
HEADER 6
JP2
DS1621 BOARD
HEADER 8
JP3
HEADER 6
USB_+5V
JP4
HEADER 8
TFT LCD
TACH PULSE
RTC_ALARM#
PWM PULSE
SCK
SDO
R7
R8
1K
LED_RGB COMMON CATHODE
D2
RPM RANGE
PORTE.2
FAN_LED
D3
LED
LAB FINAL
ECE3301L SESSION 4