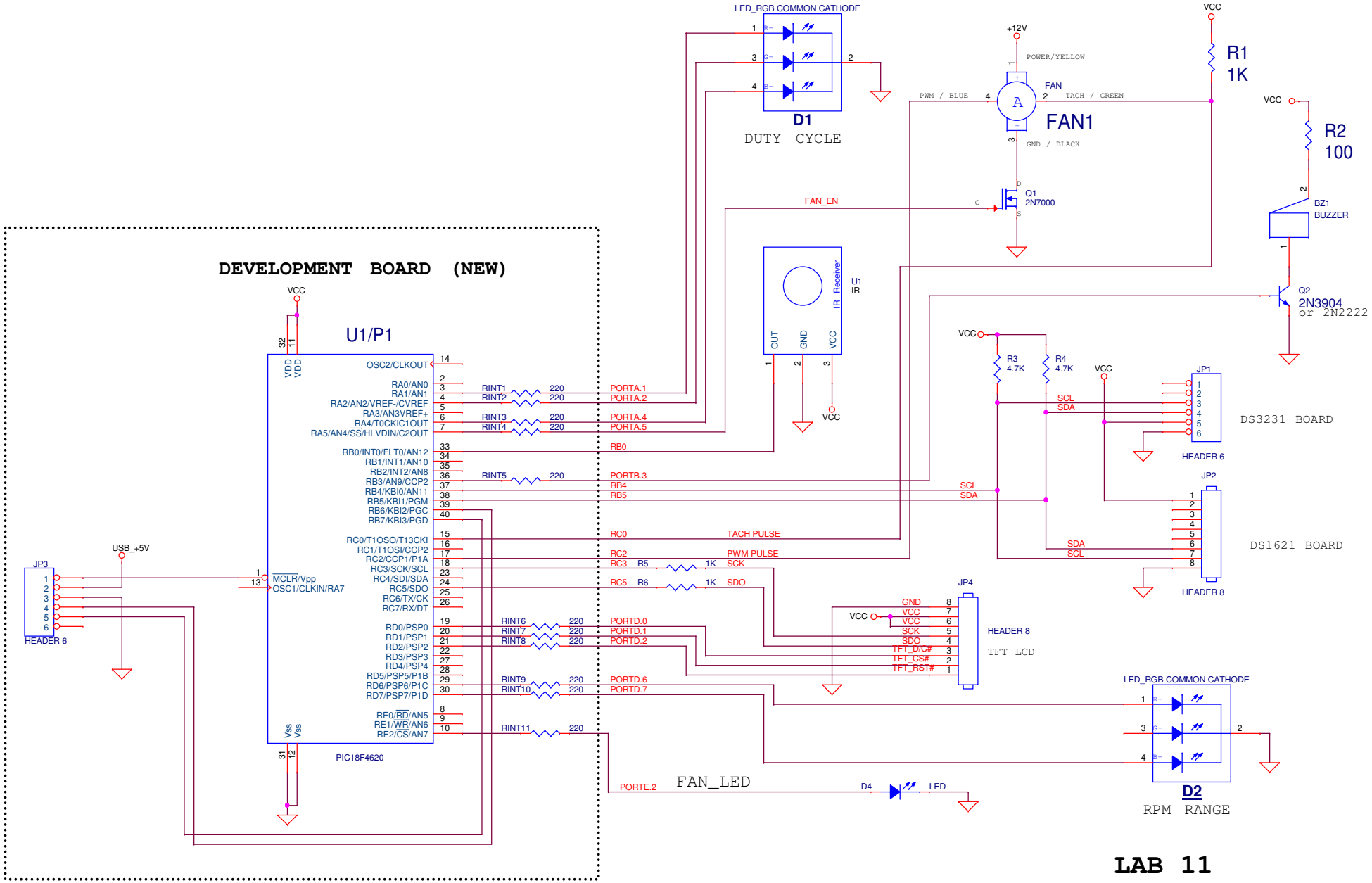
DEVELOPMENT BOARD (NEW)
U1/P1
PIC18F4620
VCC
USB_+5V
JP3
HEADER 6
LED_RGB COMMON CATHODE
D1
DUTY CYCLE
+12V
POWER/YELLOW
FAN
FAN1
PWM / BLUE
TACH / GREEN
GND / BLACK
R1
1K
R2
100
Q1
2N7000
FAN_EN
BZ1
BUZZER
Q2
2N3904
or 2N2222
U1
IR
IR Receiver
OUT
GND
VCC
R3
4.7K
R4
4.7K
JP1
DS3231 BOARD
HEADER 6
JP2
DS1621 BOARD
HEADER 8
JP4
HEADER 8
TFT LCD
TACH PULSE
PWM PULSE
FAN_LED
D4
LED
D2
RPM RANGE
LAB 11
ECE3301L SESSION 4