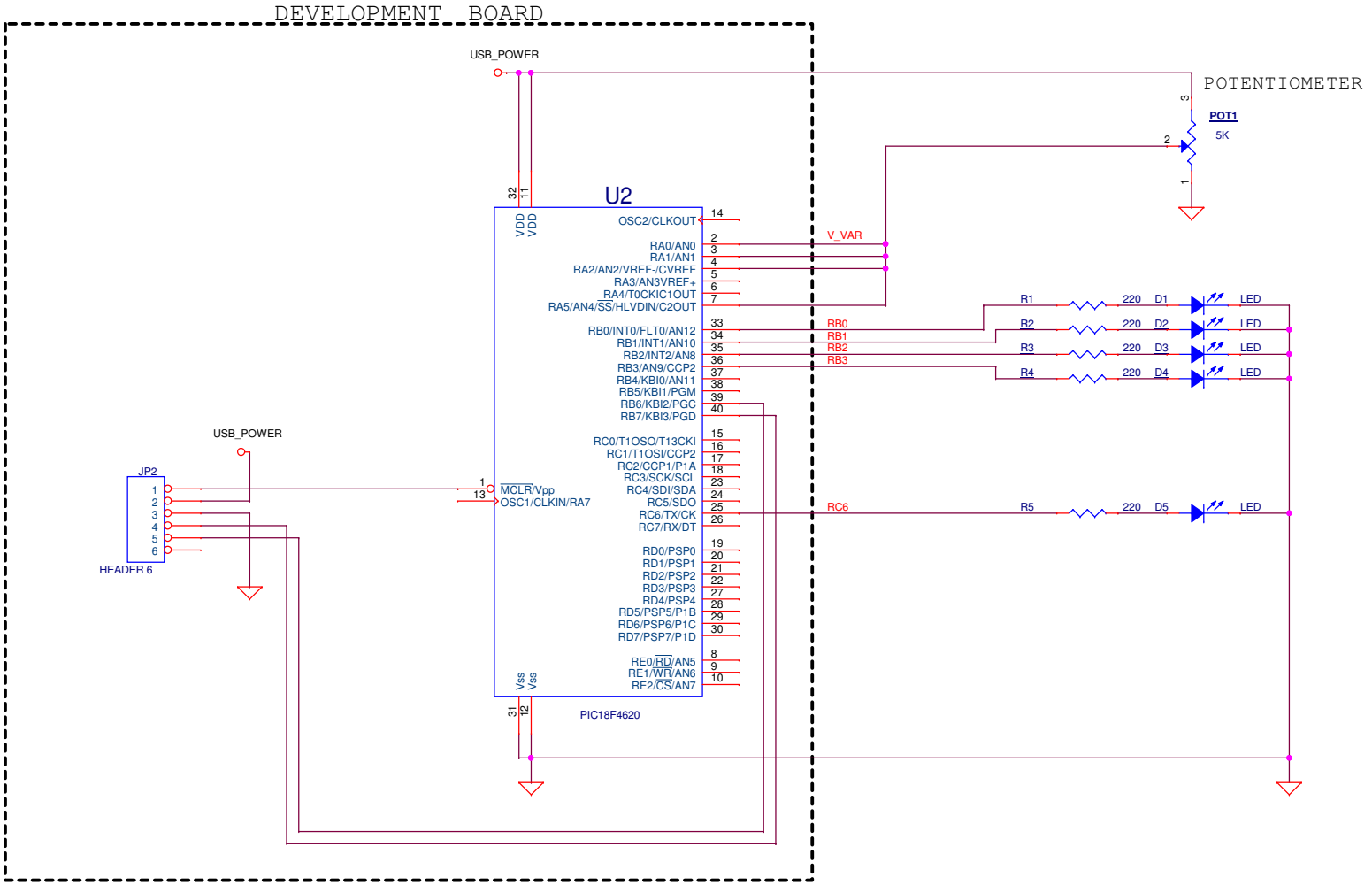

ECE3301L LAB 1