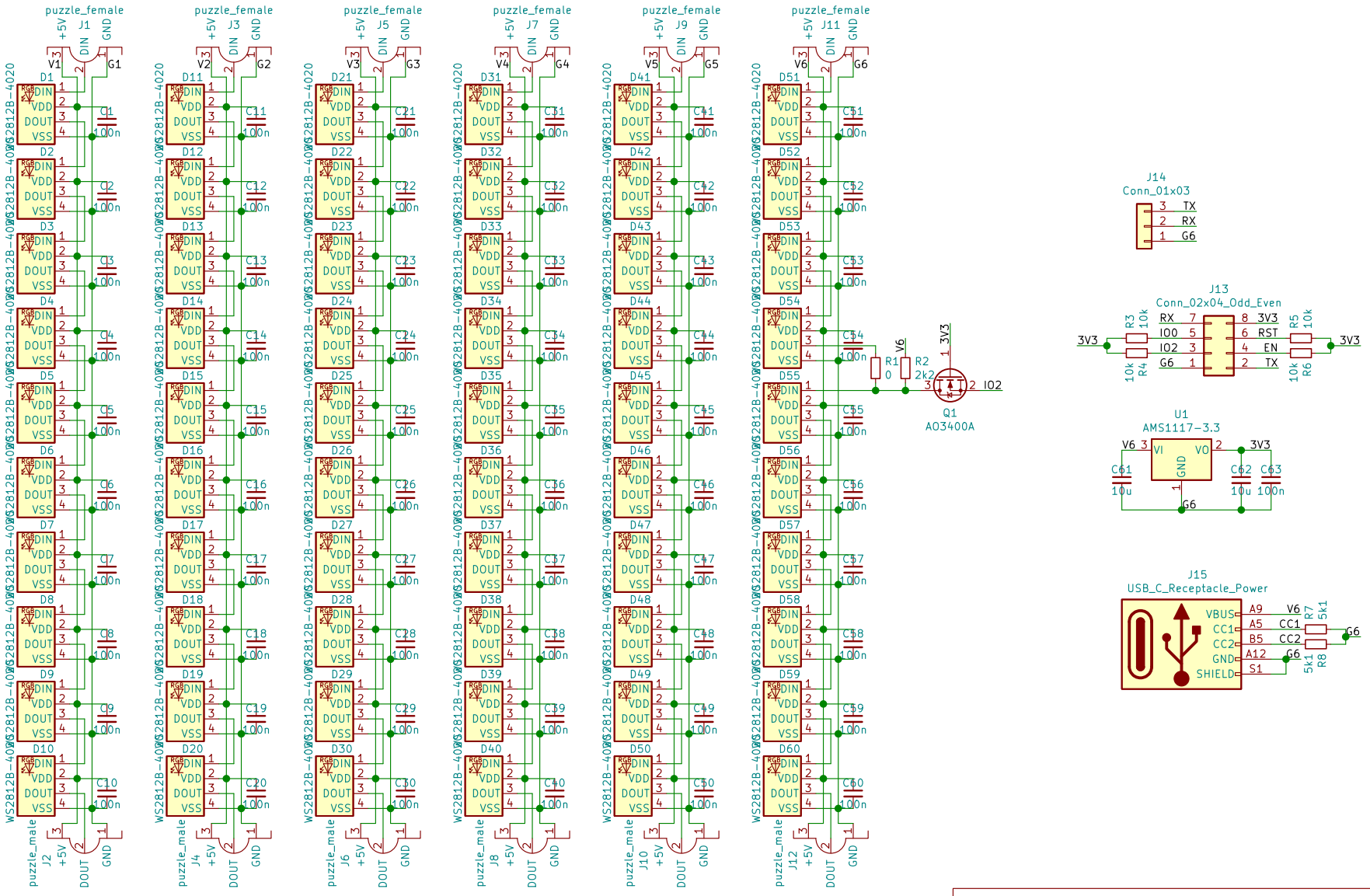

(c) Jost Salathé
CC-BY-SA 3.0

Sheet: /
File: pcb.sch

Title: colock

Size: A4	Date: 2021-11-24	**Rev: A**
KiCad E.D.A. kicad (5.1.10)-1		Id: 1/1