DISASSEMBLED VIEW

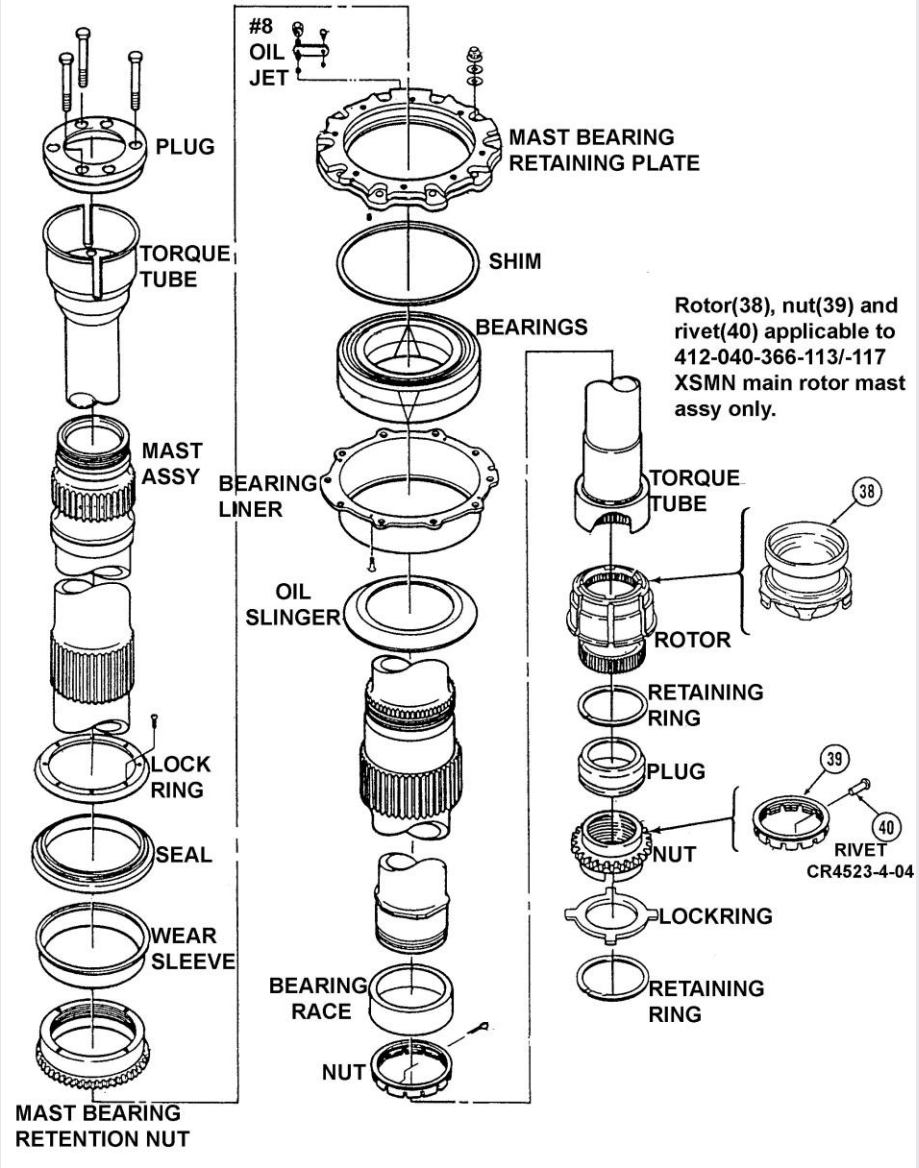

DIMENSION CHECK

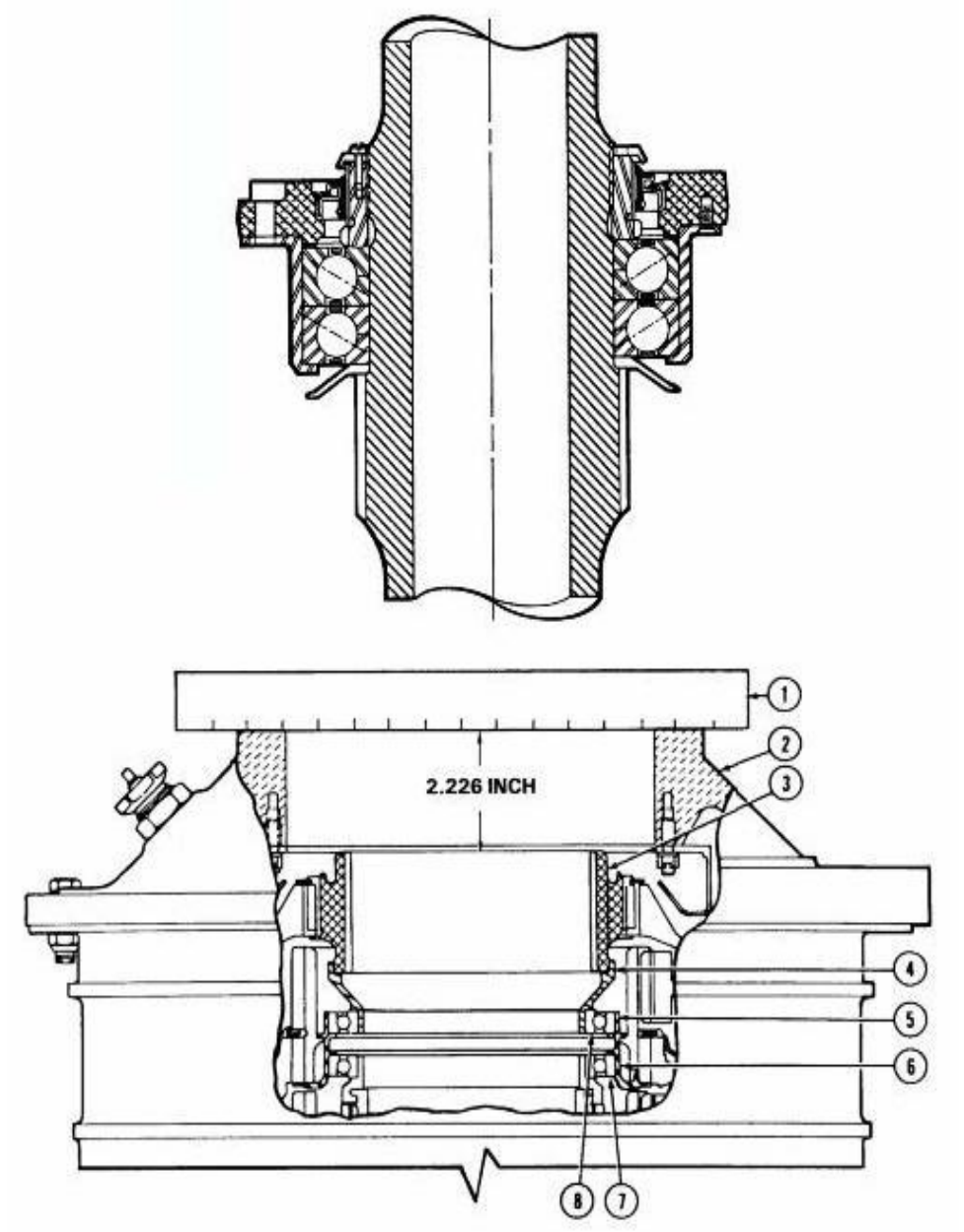

EP MAST TORQUEMETER ASSEMBLY

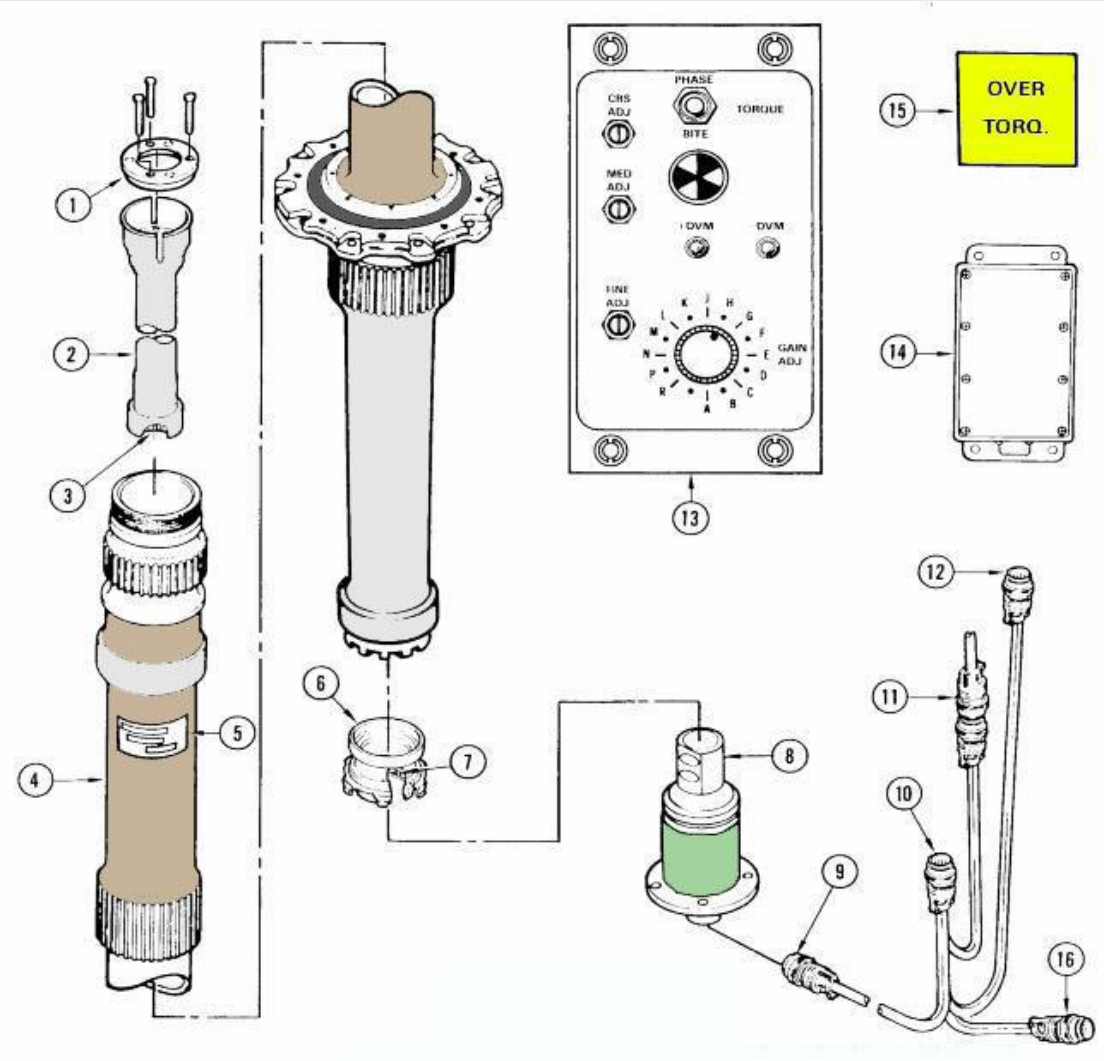

412 HP MAST ASSEMBLY

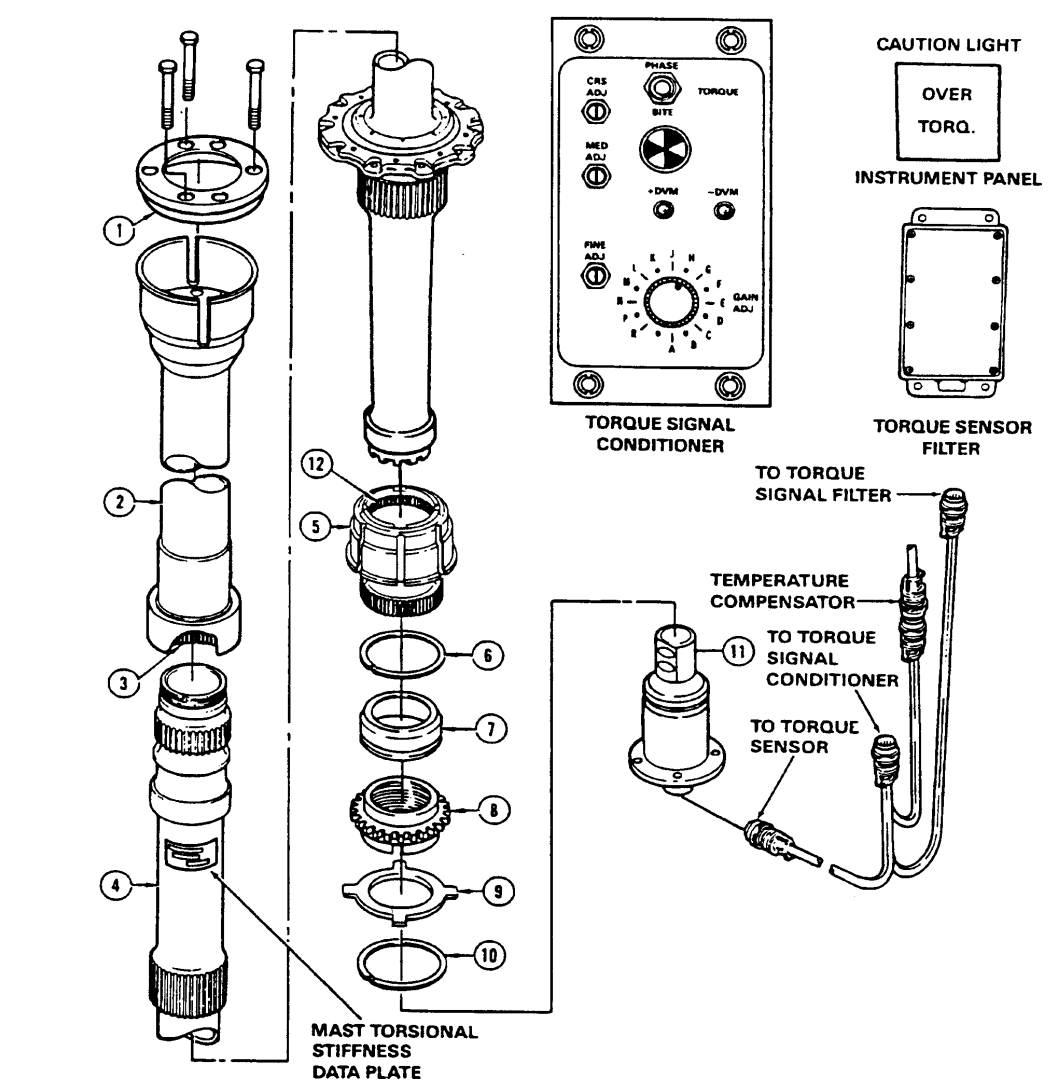

1. Taper lock plug (upper)
2. Torquemeter tube
3. Signal gear
4. Mast
5. Rotor
6. Retainer ring
7. Taper Lock plug (lower)
8. Retaining nut
9. Splined lock ring
10. Retaining ring
11. Sensor assembly
12. Reference gear

TUBE & REFERENCE GEARS

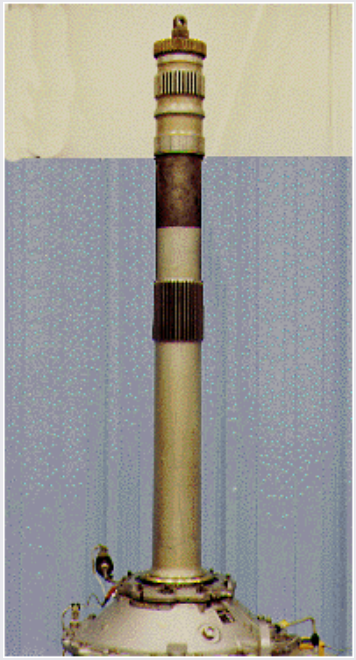

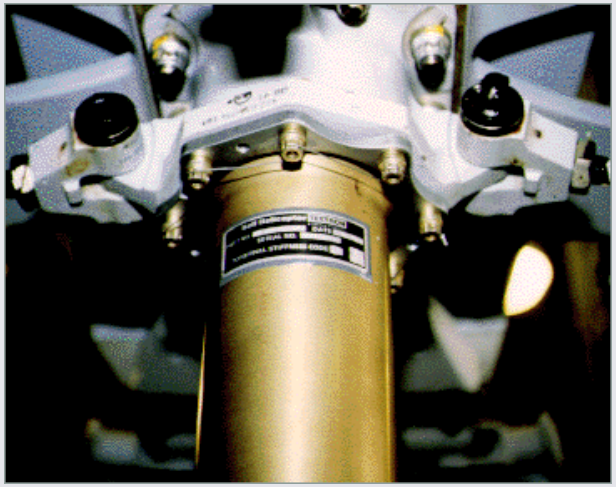

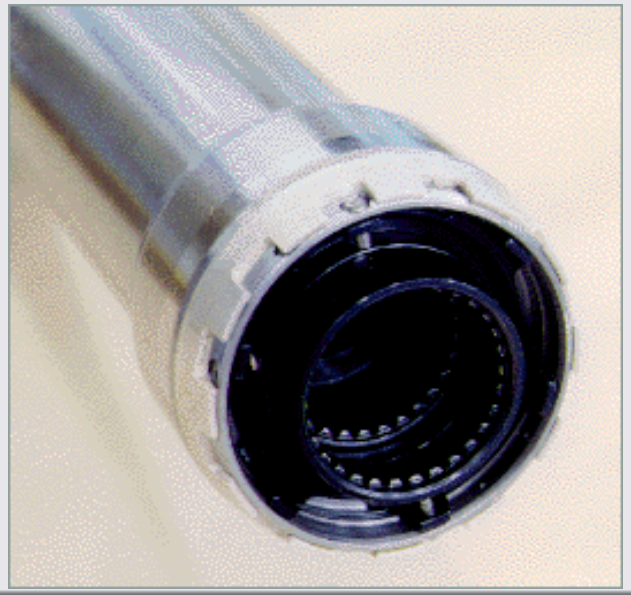

MAST TORQUE COMPONENTS

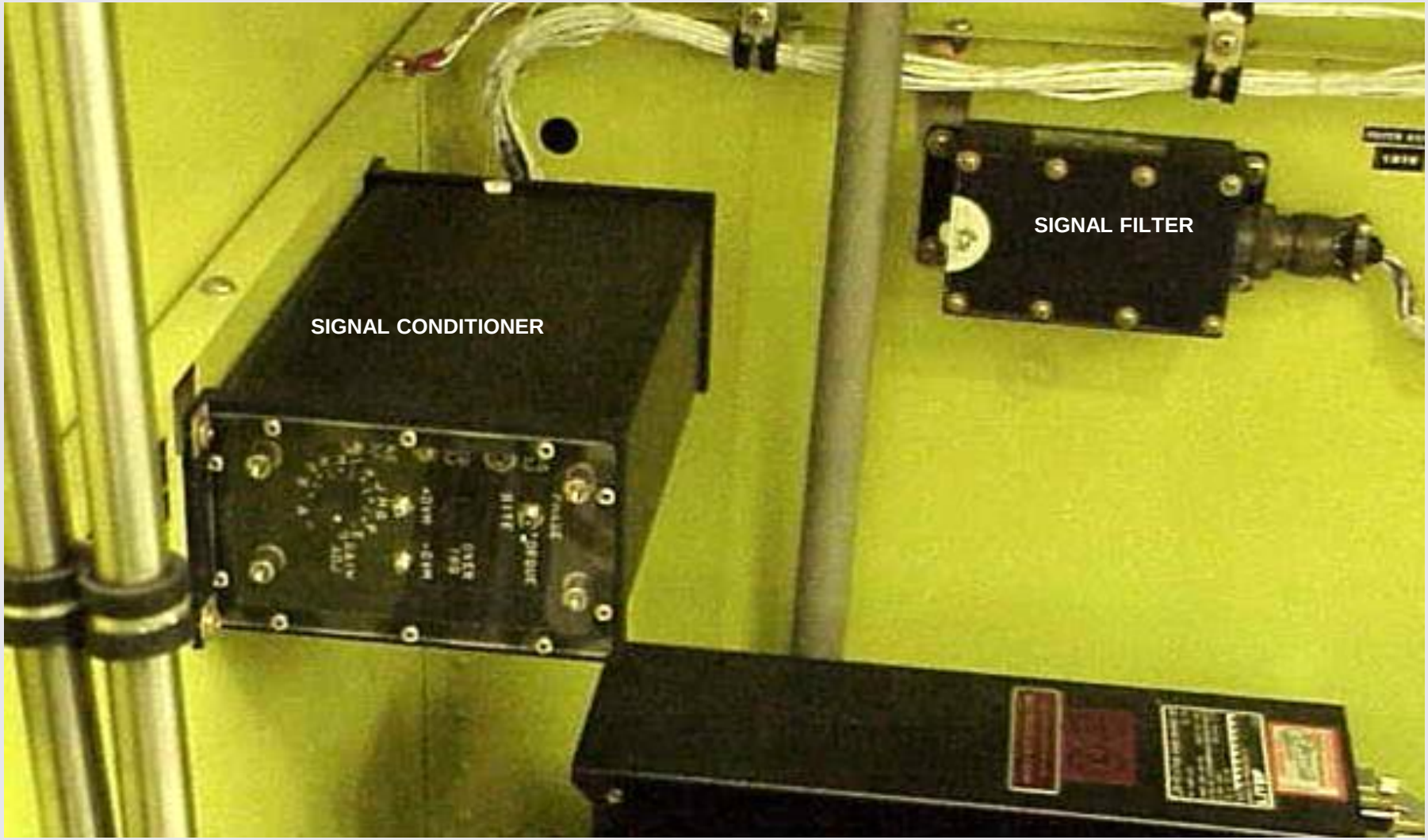

TORQUE TUBE & MONOPOLE SENSOR

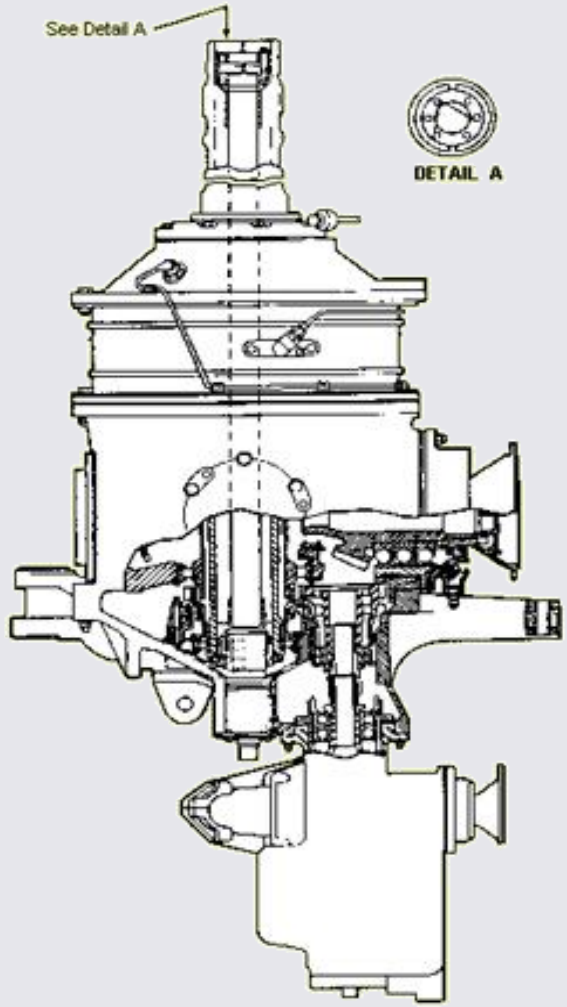

Torquetube Alignement Tool
412-240-028-101

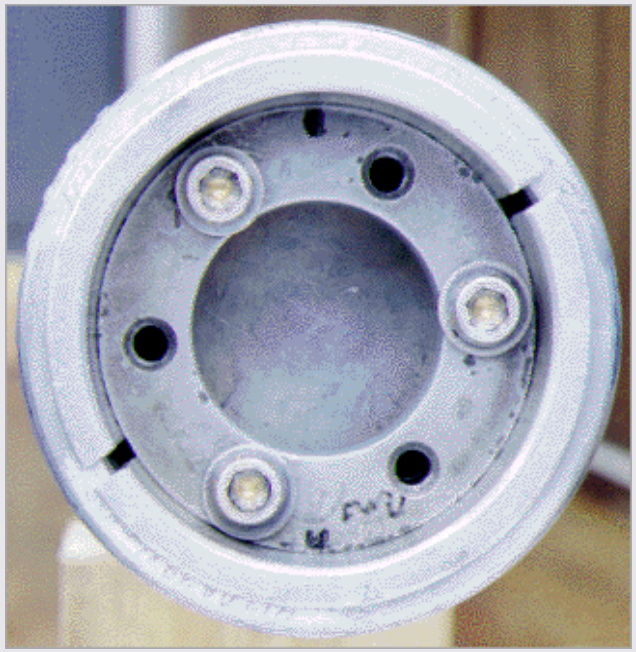

EP MAST TORQUEMETER ASSEMBLY

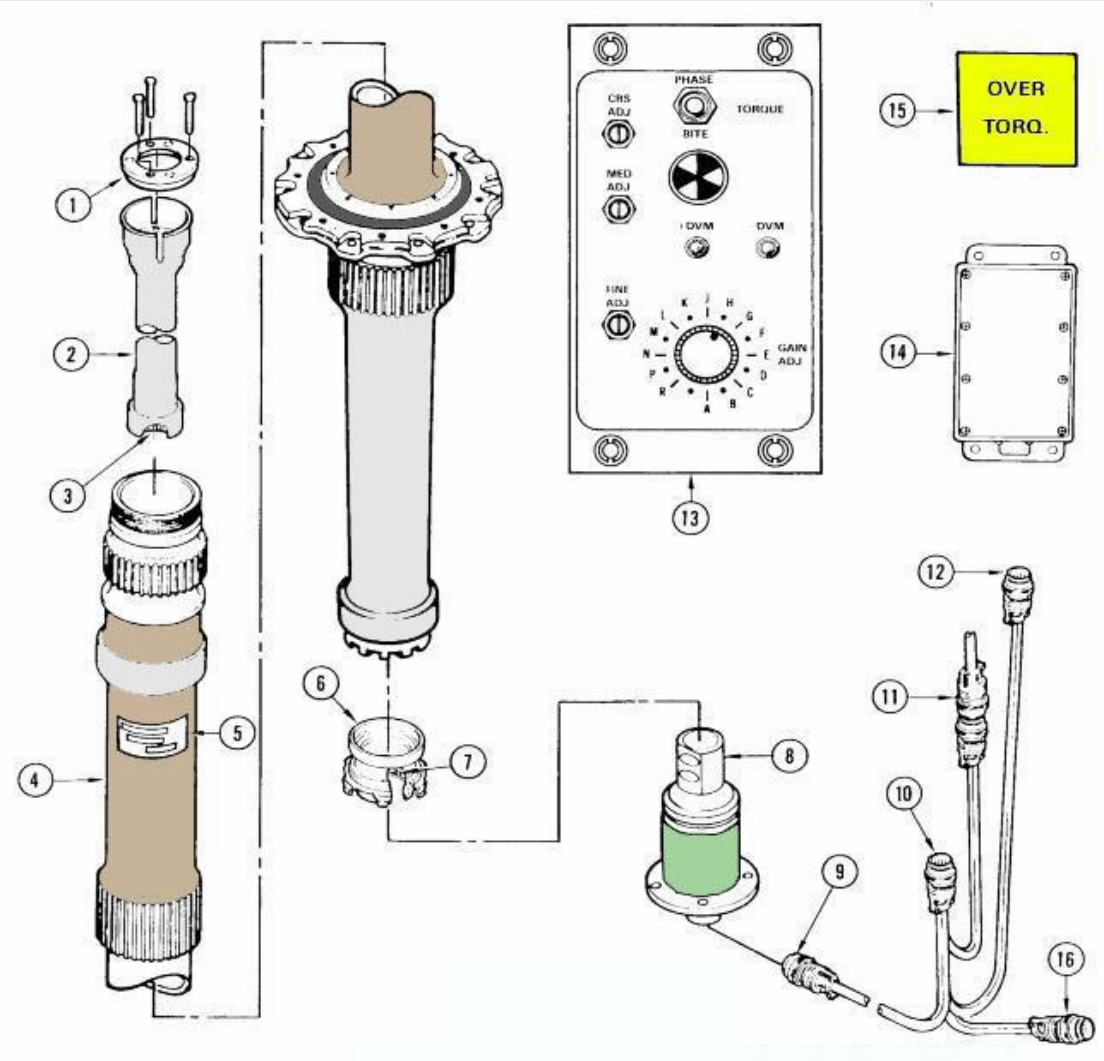

MAST TORQUE CALIBRATION

TRIPLE TORQUE INDICATOR

	MAST TORQUE	
	10 to 81%	Continuous operation
	81 to 100%	5 minute takeoff range
	100%	Maximum
	ENGINE	
	5 to 73.2%	Continuous OEI operation
	73.2 to 81%	2 1/2 Minute OEI range
	81%	Maximum OEI

412 REVIEW

1. __2__ Sets of splines on the mast have a master spline groove.

2. The mast thrust bearing is a __duplex__ , double thrust bearing consisting of a single row of balls, a split inner race and a one piece outer race.

3. All parts that make up the mast __Thrust__ __bearing__ are a matched set.

4. All parts that make up the mast alignment bearing __Are__ __not__ a matched set.

5. The number __8__ oil jet of the transmission oil system is located in the mast bearing retainer plate.

6. Prior to installing the mast in the transmission check for __planetary__ indexing.

7. The shims between the retainer plate and the bearing liner are used to clamp up the mast bearing __outer__ races.

8. The torque sensor measures the difference in __twist__ between the signal gear and the reference gear.

9. Prior to removing the mast from the transmission, remove the mast torquemeter sensor to prevent __damage__.

10. The splines that drive the drive plate set should be __lubricated__ with MIL-G-81322 grease prior to installation of the main rotor controls.