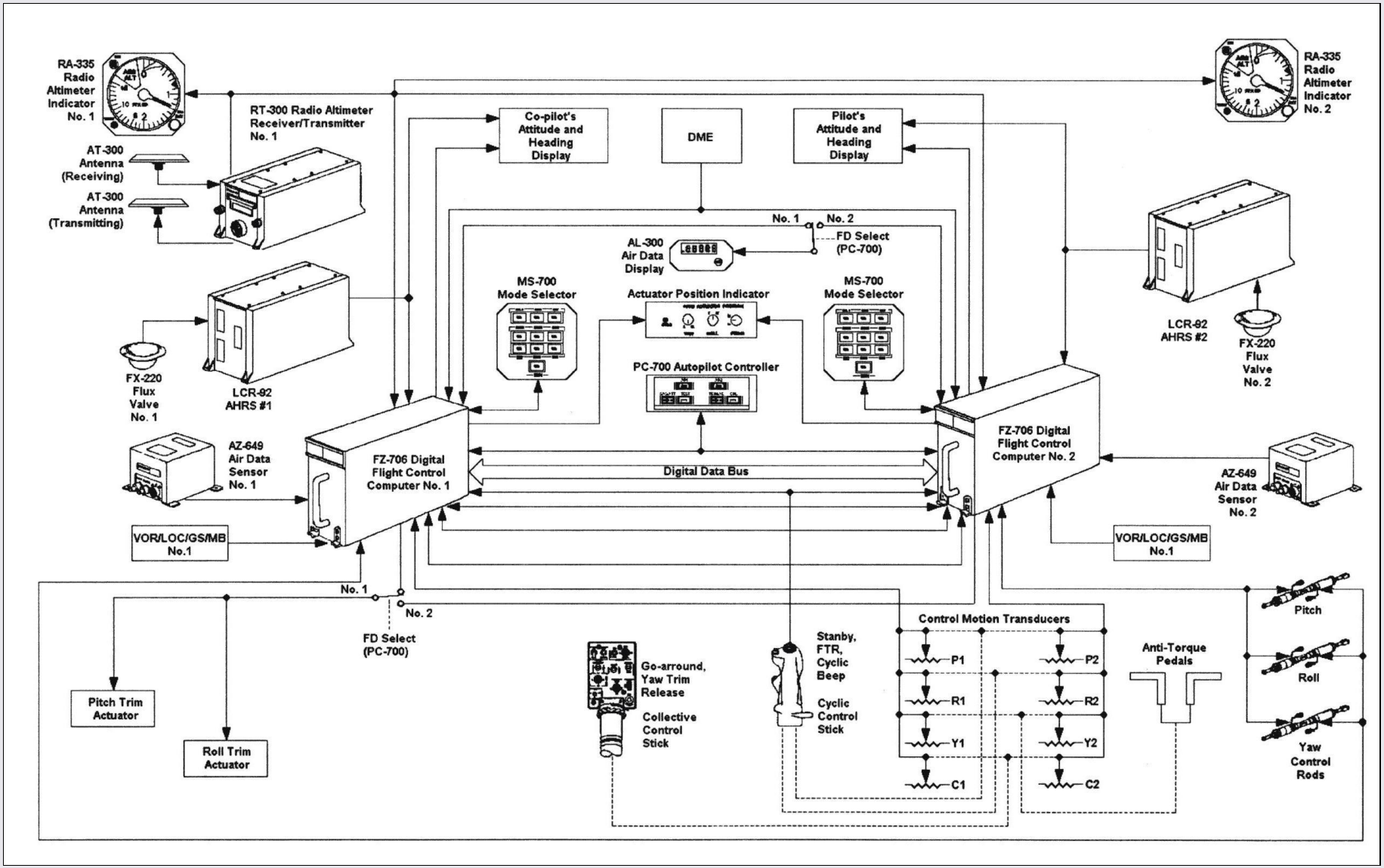
RA-335 Radio Altimeter Indicator No. 1
RT-300 Radio Altimeter Receiver/Transmitter No. 1
AT-300 Antenna (Receiving)
AT-300 Antenna (Transmitting)
Co-pilot's Attitude and Heading Display
DME
Pilot's Attitude and Heading Display
RA-335 Radio Altimeter Indicator No. 2
No. 1
No. 2
FD Select (PC-700)
AL-300 Air Data Display
MS-700 Mode Selector
Actuator Position Indicator
MS-700 Mode Selector
PC-700 Autopilot Controller
LCR-92 AHRS #2
FX-220 Flux Valve No. 2
FX-220 Flux Valve No. 1
LCR-92 AHRS #1
AZ-649 Air Data Sensor No. 1
FZ-706 Digital Flight Control Computer No. 1
Digital Data Bus
FZ-706 Digital Flight Control Computer No. 2
AZ-649 Air Data Sensor No. 2
VOR/LOC/GS/MB No.1
VOR/LOC/GS/MB No.1
No. 1
No. 2
FD Select (PC-700)
Pitch Trim Actuator
Roll Trim Actuator
Go-arround, Yaw Trim Release
Collective Control Stick
Stanby, FTR, Cyclic Beep
Cyclic Control Stick
Control Motion Transducers
P1
P2
R1
R2
Y1
Y2
C1
C2
Anti-Torque Pedals
Pitch
Roll
Yaw Control Rods

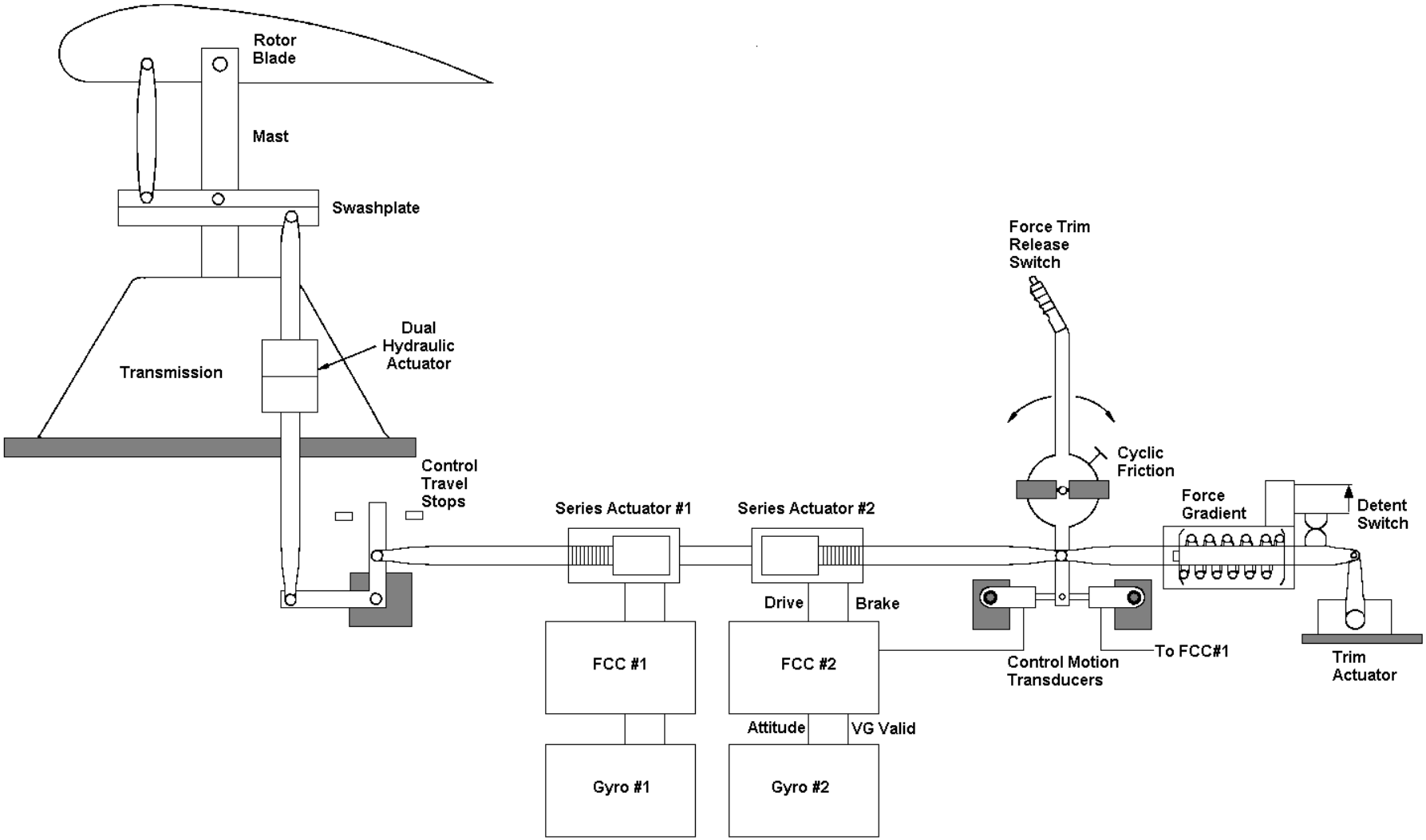
Rotor
Blade
Mast
Swashplate
Transmission
Dual
Hydraulic
Actuator
Control
Travel
Stops
Series Actuator #1
Series Actuator #2
Force Trim
Release
Switch
Cyclic
Friction
Force
Gradient
Detent
Switch
Drive
Brake
FCC #1
FCC #2
Control Motion
Transducers
To FCC#1
Trim
Actuator
Attitude
VG Valid
Gyro #1
Gyro #2

FZ-706 DUAL DIGITAL FLIGHT CONTROL COMPUTERS

The Autopilots in the FZ-706 Digital Flight Control Computers provide all computation for pitch, roll, and yaw stabilization, attitude retention, and coupling to the flight director. In addition, the autopilots provide the necessary signals to drive the series actuators on the pitch, roll, and yaw control rod assemblies. The autopilots also provide trim signals to the parallel trim actuators in the pitch and roll axes to keep cyclic controls centered.

The Flight Directors provide all pitch, roll, and collective axis commands to the ADI and autopilots. The lateral channel combines compass heading, attitude, navigation receiver, and course select data into computed lateral cyclic commands. Altitude, airspeed, instantaneous vertical velocity, and glideslope errors are computed and combined with pitch attitude to provide longitudinal cyclic commands.

AUTOPILOT CONTROLLER

The autopilot controller enables the pilot to engage the autopilot system, select the desired mode of operation, select the master computer, and initiate tests. The three basic modes are stability augmentation (SAS),attitude retention (ATT), and automatic flight path control (CPL). The panel display consists of illuminating pushbutton switches. When a switch is engaged, a mode selected, a master computer is selected, or a test is initiated, it is annunciated by a bright light level. This light level is controlled by external light dimming circuitry. A lamp test function is controlled by the flight director mode selector SBY switch.

LINEAR ACTUATORS

The control rod assembly actuator is a motor-driven jackscrew, extendable piston type device. The actuator is installed in the helicopter control linkages in a series arrangement. Electrical commands from the autopilot computer drives the motor of the actuator to extend or retract the control linkages which position the aircraft controls to command the desired maneuver. Position feedback to the autopilot servo loop is provided by a linear variable differential transformer (LVDT). An electro-mechanical brake releases the motor for operation when power is applied at autopilot engagement.

ACTUATOR POSITION INDICATOR

The Actuator Position Indicators (API) give a relative indication of linear actuator position about its midpoint as it works into the swashplate. The APIs monitor the autopilot system 1 actuators unless the pushbutton switch is pressed. Pressing the switch causes the autopilot system 2 pitch and roll actuators to be monitored.

CONTROL MOTION TRANSDUCERS

The Control Motion Transducer assembly consists of dual internal linear potentiometers, a cylindrical case, a movable shaft, and a 6 pin connector for transferring signal data and power. The transducers are mechanically connected to the controls and are used to indicate control movement by the pilot to the AFCS.

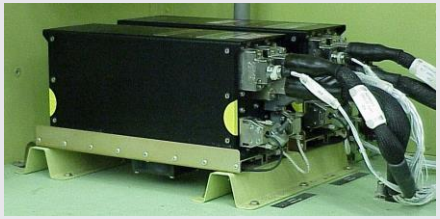

AHRS

The Attitude Heading and Reference System (AHRS) is a fiber optic gyroscopic device. The LCR-92 Attitude and Heading Reference System (AHRS) is an all attitude inertial sensor which provides helicopter attitude, heading, and flight dynamics information for the cockpit display, flight control, weather radar antenna and other helicopter systems and instruments. The LCR-92 is a strap down inertial measurement system using fiber optic rate gyros, which are strapped down to the principal aircraft axes. A digital computer mathematically integrates the rate data to obtain heading, pitch and roll data. A flux valve and two level sensors provide long term references. This type of gyro has no moving parts.

FLUX VALVE

The flux valve detects the magnitude and direction of the horizontal component of the earth's magnetic field and converts it to electrical information which is used to align the directional gyro to magnetic north.

FORCE GRADIENT

The DAFCS has a force gradient and parallel trim actuator in the pitch and roll axis. Each force gradient has a detent switch.The two force gradients are installed to permit "fly through". Each unit has a different preload and length adjustment. The two rotary trim actuators provide trimming by moving the force gradient. Each force gradient contains a spring, actuator and switch. The spring will be preloaded for the individual axis. The switch will actuate anytime the actuator is displaced .050 inch in either direction.

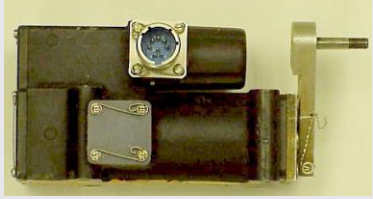

PARALLEL TRIM ACTUATOR

The electro-mechanical rotary actuators used for automatic trim are comprised of a DC servo motor, a gear train, brake, clutch, output arm, and a 10 pin connector to transfer power and signal data. The rotary trim actuators are mounted in parallel with the control system through a force gradient spring cartridge and detent switch. The detent switch enables the trim actuator to be overridden by the pilot. Trim actuators receive command signals from the autopilot computer for automatic trimming.

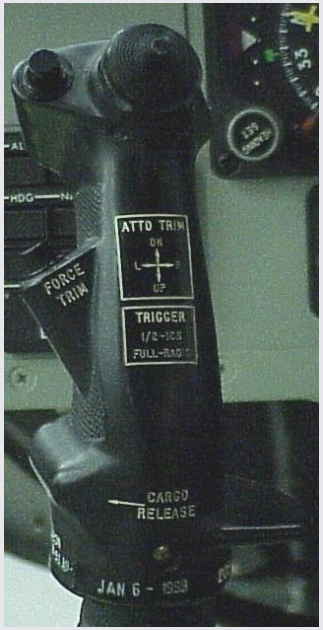

CYCLIC CONTROL HEAD SWITCHES

The ATTD TRIM control on the cyclic stick enables the pilot to make small attitude changes while flying in the ATT mode and not coupled to the flight director. It is also used, when coupled, in indicated airspeed (IAS) mode or vertical speed (VS) modes. Large scale changes should be made using the FORCE TRIM release switch. ATTD TRIM is disabled when both autopilots are OFF, or SAS mode is selected.

The NAV STBY switch, located on the cyclic stick, cancels all flight director modes and biases both command bars from view, when depressed. The NAV STBY switch causes all mode segments to be lit and the flight director flag on the ADI to come into view. Also, autopilot controller lights illuminate. Releasing the NAV STBY switch causes all segments to go out and the flight director warning flag to retract from view.

The Force Trim Release (FTR) switch is located on the cyclic stick. When the FTR switch is pressed, the pilot can manually position the cyclic for desired pitch or roll correction. This is a possible due to the release of the magnetic brake. Also, the helicopters linear actuators are placed in a fast follow-up mode so that when the FTR switch is released, the new attitude is the reference.

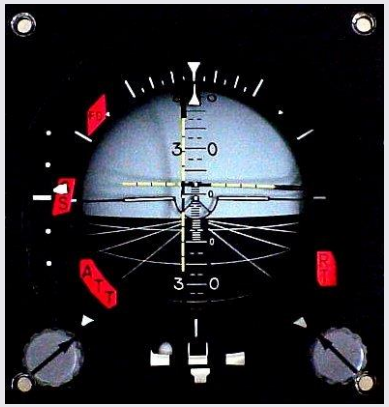

ATTITUDE DIRECTOR INDICATOR (ADI)

The ATTITUDE DIRECTOR INDICATOR has the following functions: (1) The Flight Director (FD) warning flag, (2) the roll indicator needle, (3) the roll steering bar (pointer), (4) the pitch steering bar (pointer), (5) the miniature airplane symbol, (6) the rate-of-turn warning flag, (7) the pitch trim knob, (8) the rate of turn indicator, (9) the inclinometer, (10) the roll trim knob, (11) the attitude warning flag, and (12) the sphere.

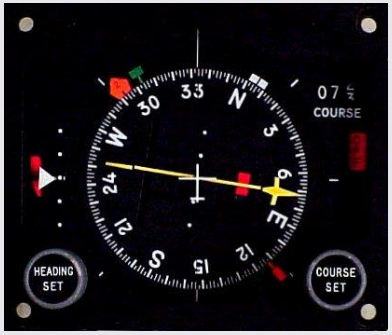

HORIZONTAL SITUATION INDICATOR (HSI)

The HORIZONTAL SITUATION INDICATOR combines numerous displays to provide a map-like display of the aircraft position. The indicator displays aircraft position relative to VOR radials, localizer, glideslope beam, and ADF stations.

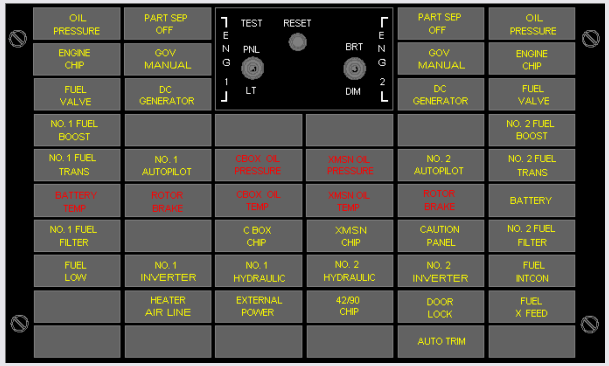

AUTOPILOT / AUTOTRIM CAUTION LIGHTS

The "NO. 1 AUTOPILOT" and "NO. 2 AUTOPILOT" caution lights will be "ON" if the respective autopilot fails or is disengaged.

The "AUTOTRIM" caution light illuminates whenever a failure of pitch or roll autotrim has been detected.

The "DCPL" light will be illuminated if the flight director is decoupled manually.

The "FT OFF" light will be illuminated if the force trim switch on the miscellaneous control panel is in the OFF position.

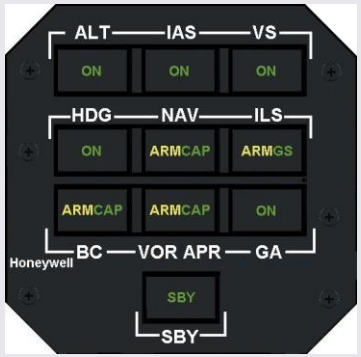

MODE SELECTOR

The mode selector enables the pilot to select and annunciate the various flight modes of the helicopter flight director system. The bezel and panel display characteristics consist of illuminating pushbutton switches for selecting flight director standby, roll axis, or pitch axis modes of operation. When a mode is selected, that mode is annunciated by a bright light level. The light level is controlled by external cockpit light dimming circuitry.

COLLECTIVE CONTROL STICK (GO-AROUND SWITCH

The remote GA switch is located on the pilot collective stick. When selected, all other modes are reset, and the GA segment is illuminated. The roll steering bar receives a zero command, and the pitch bar receives a possible rate of climb consistent with airspeed. Selection of any other pitch mode will cancel the GA mode.

AIR DATA SENSOR

The air data sensor uses pitot and static atmospheric pressures of flight to produce a DC output voltage that is proportional to calibrated airspeed, and altitude. This DC output signal is used in the flight director computer to provide airspeed hold, altitude hold, and vertical speed hold information.

AIR DATA COMMAND DISPLAY

The AL-300 Air Data Display is used to display the command or reference values for the Indicated Airspeed (IAS) and Vertical Speed (VS) modes. It is also used to display fault codes during system power-up tests, continous tests, and preflight tests.

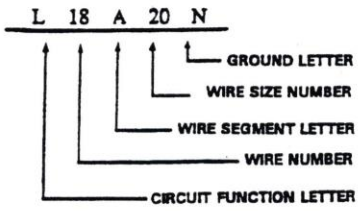

CIRCUIT FUNCTIONS

CODE	NOMENCLATURE	CODE	NOMENCLATURE
C	Control surfaces	M	Miscellaneous electric
E	Engine instruments	N	Ground
F	Flight instruments	P	DC power
G	Landing gear		
H	Heating,ventilation,de-icing	Q	Fuel and oil
J	Ignition	V	DC power and DC control cables for AC
K	Engine control	W	Warning and emergency
L	Lighting	X	AC power

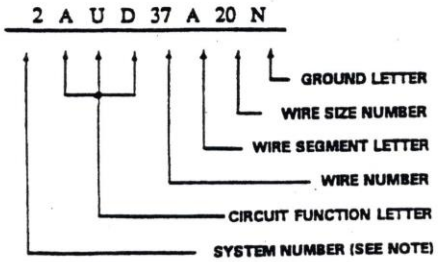

CIRCUIT FUNCTIONS

CODE	NOMENCLATURE	CODE	NOMENCLATURE
ADF	Navigation (ADF)	MKR	Marker beacon
ALT	Radio altimeter	N	Ground
AUD	Audio intercommunication(ICS)	NAV	Navigation (Glideslope/ VOR)
CMPS	Gyromagnetic compass	VHF	VHF communication
DME	Distance measuring equipment	XPDR	Transponder (ATC)

NOTE: Number preceding circuit function indicates more than one unit, facility, or system.

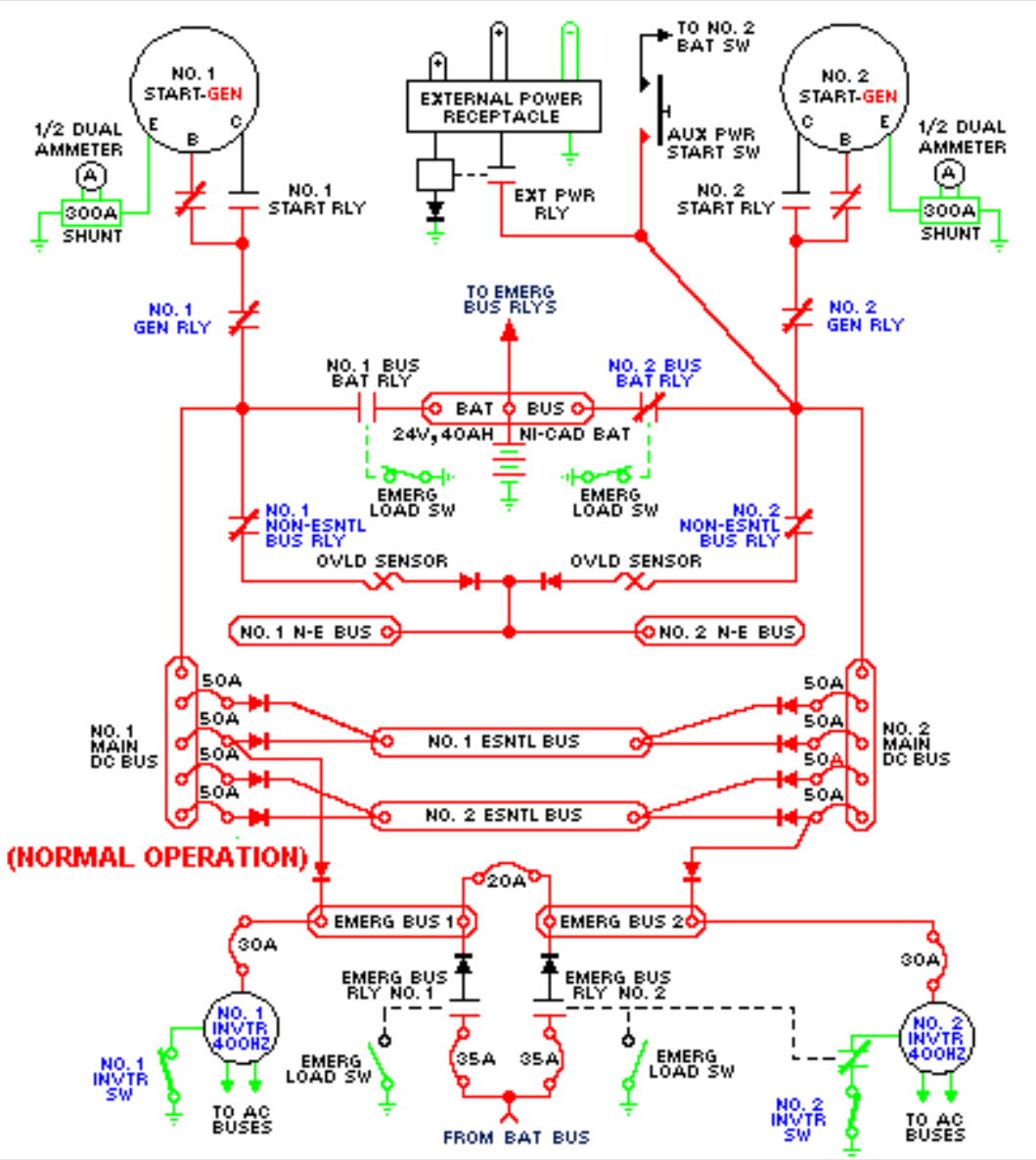

GENERATOR 1 and 2 SW TO “ON”:BAT 1 SW “OFF”: and NEB SW TO “NORMAL”

Electrical Power System

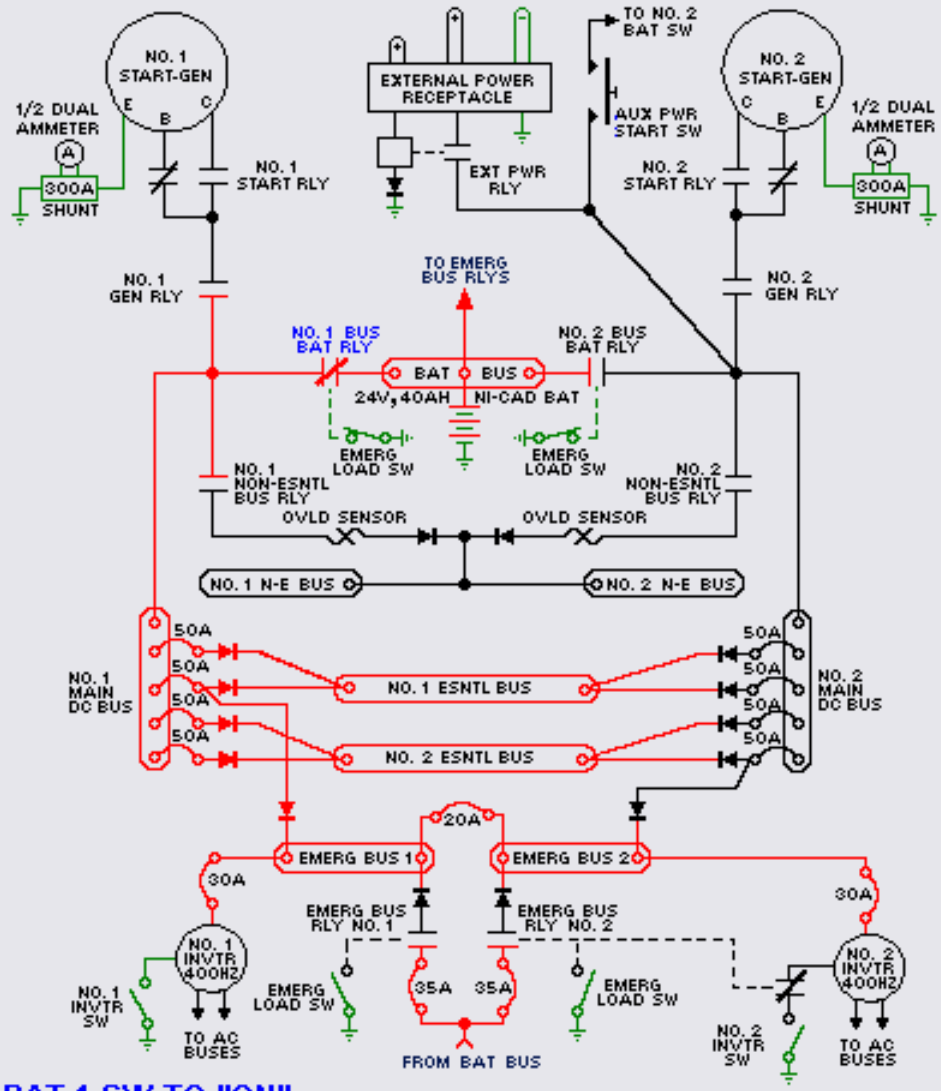

BAT 1 SW TO "ON"

Electrical Power System

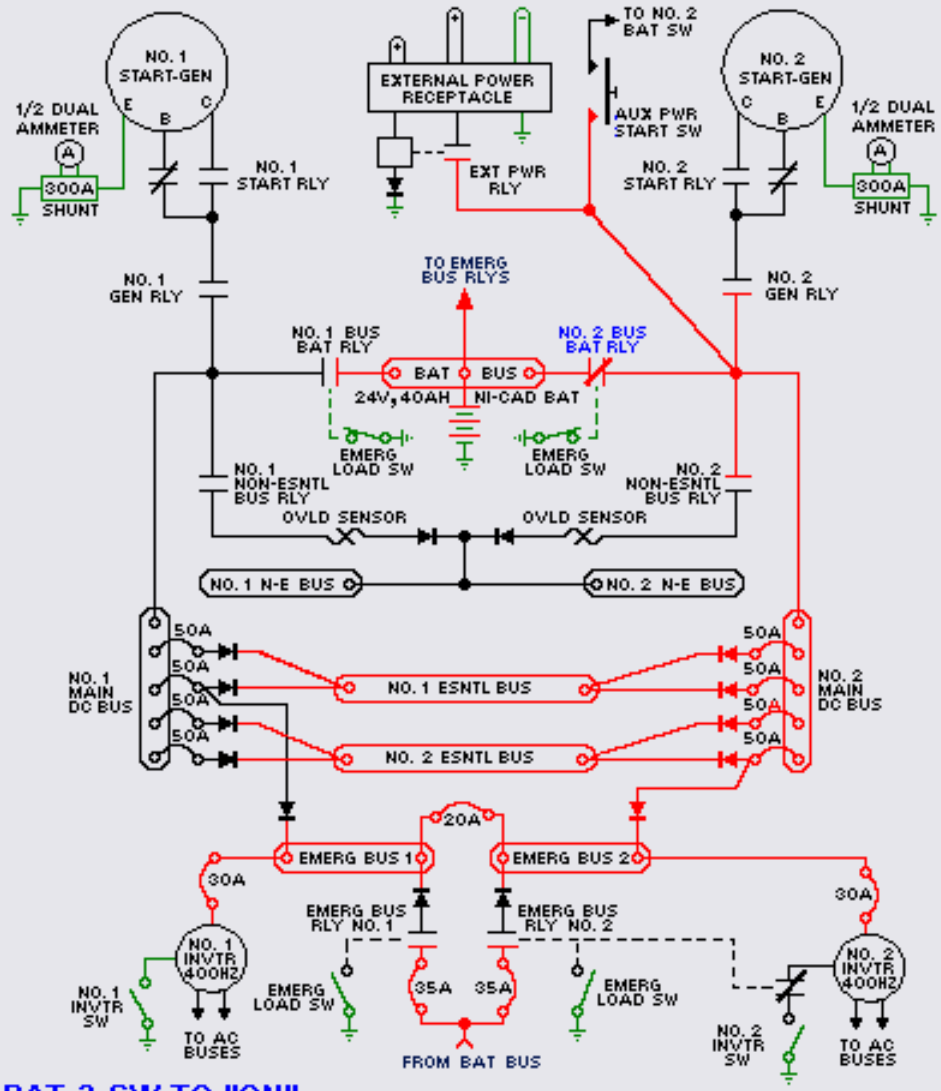

BAT 2 SW TO "ON"

Electrical Power System

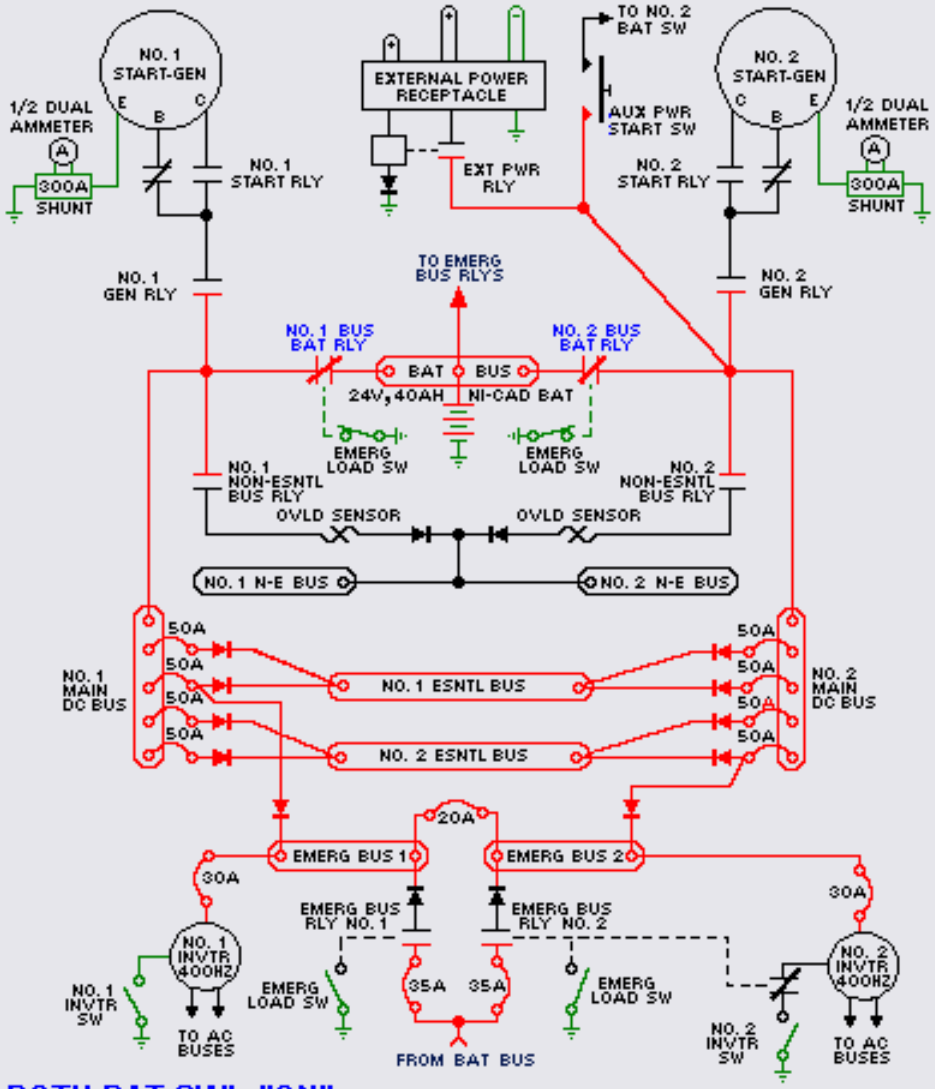

BOTH BAT SW's "ON"

Electrical Power System

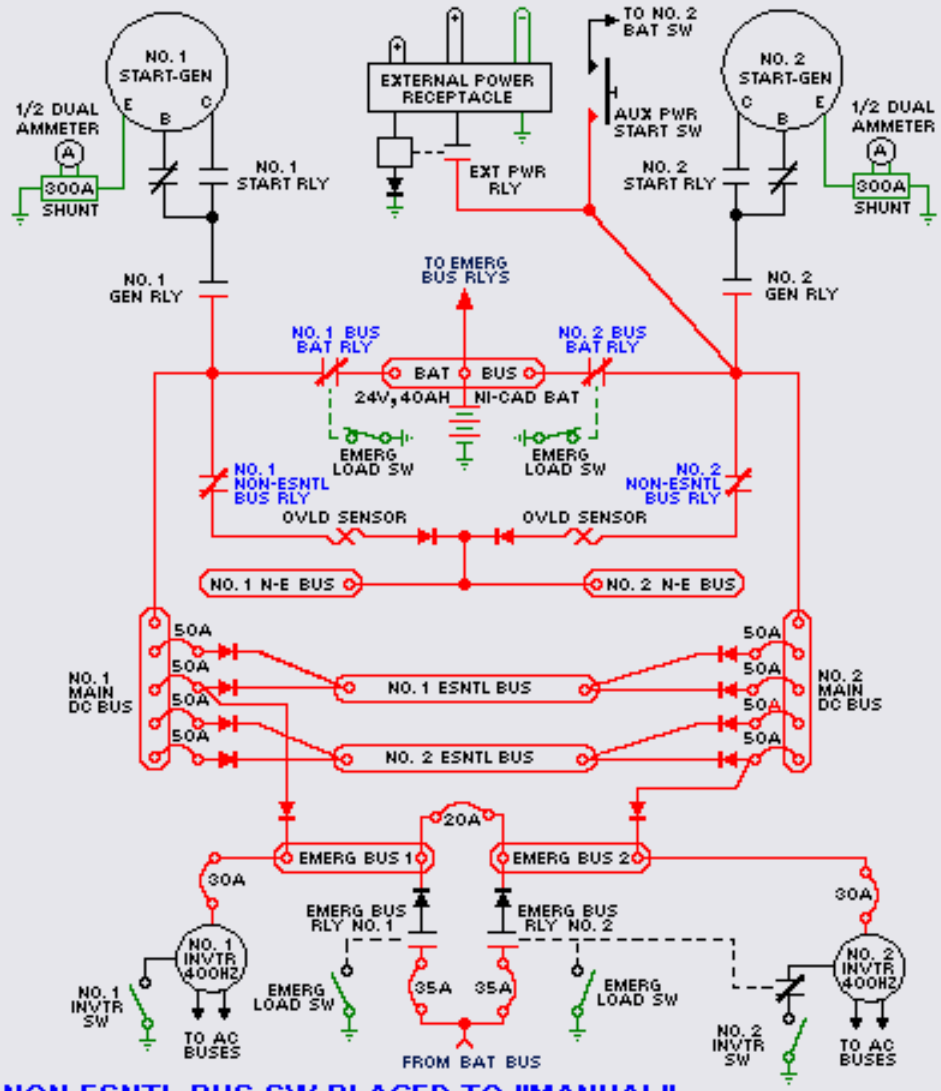

NON-ESNTL BUS SW PLACED TO "MANUAL"

Electrical Power System

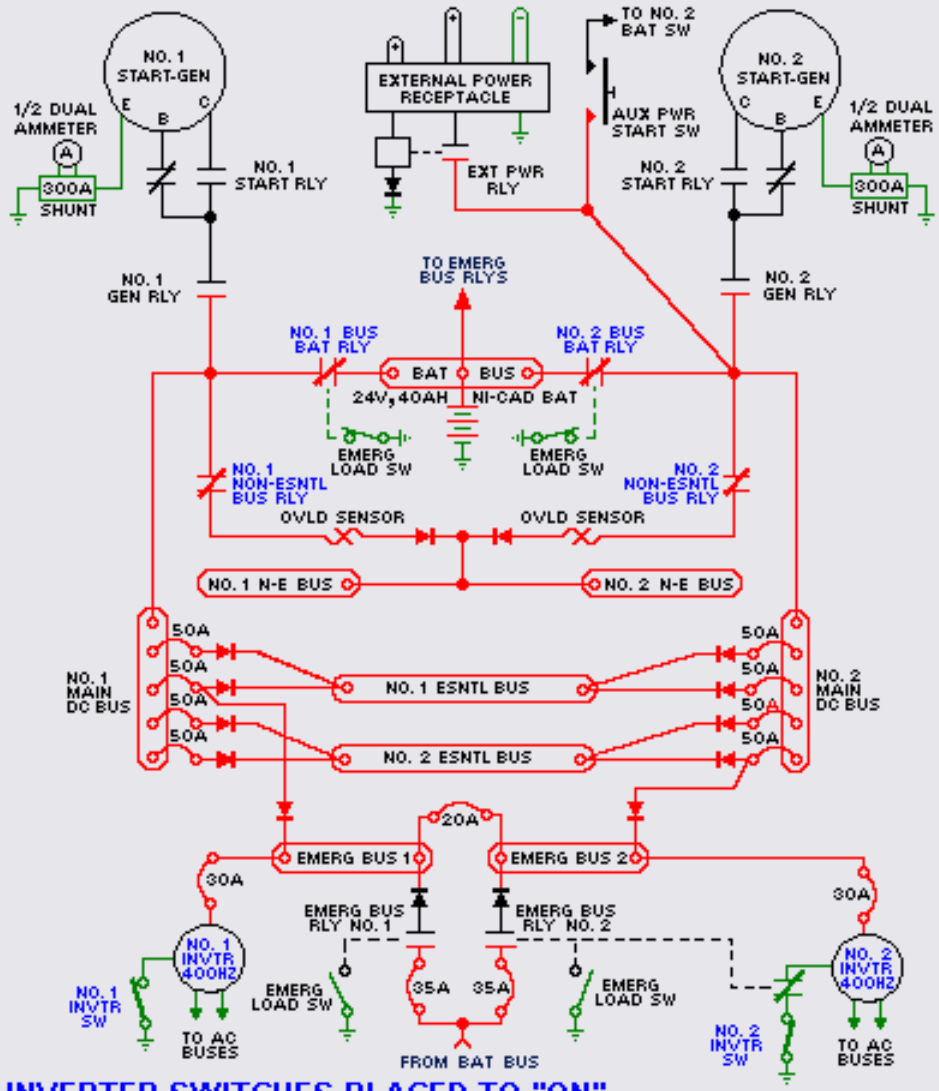

INVERTER SWITCHES PLACED TO "ON"

Electrical Power System

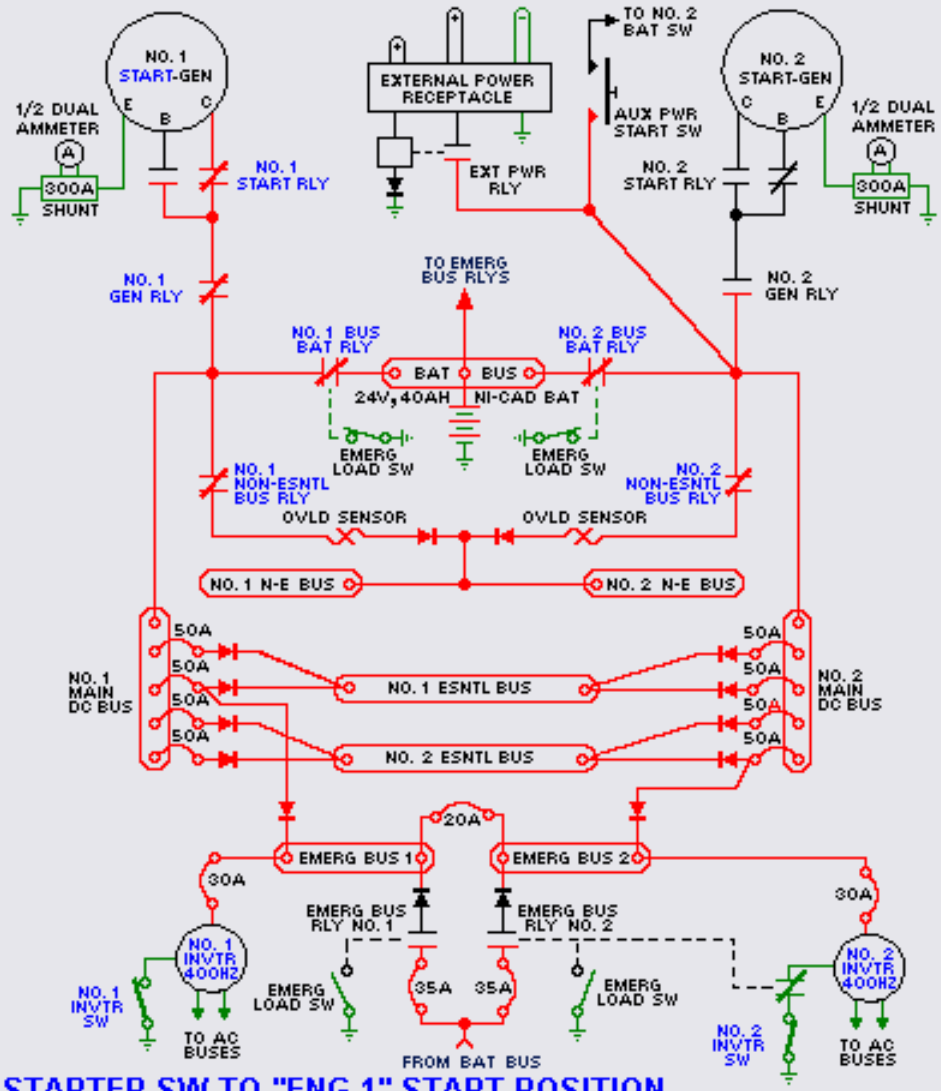

STARTER SW TO "ENG 1" START POSITION

(START SWITCH NOT SHOWN)

Electrical Power System

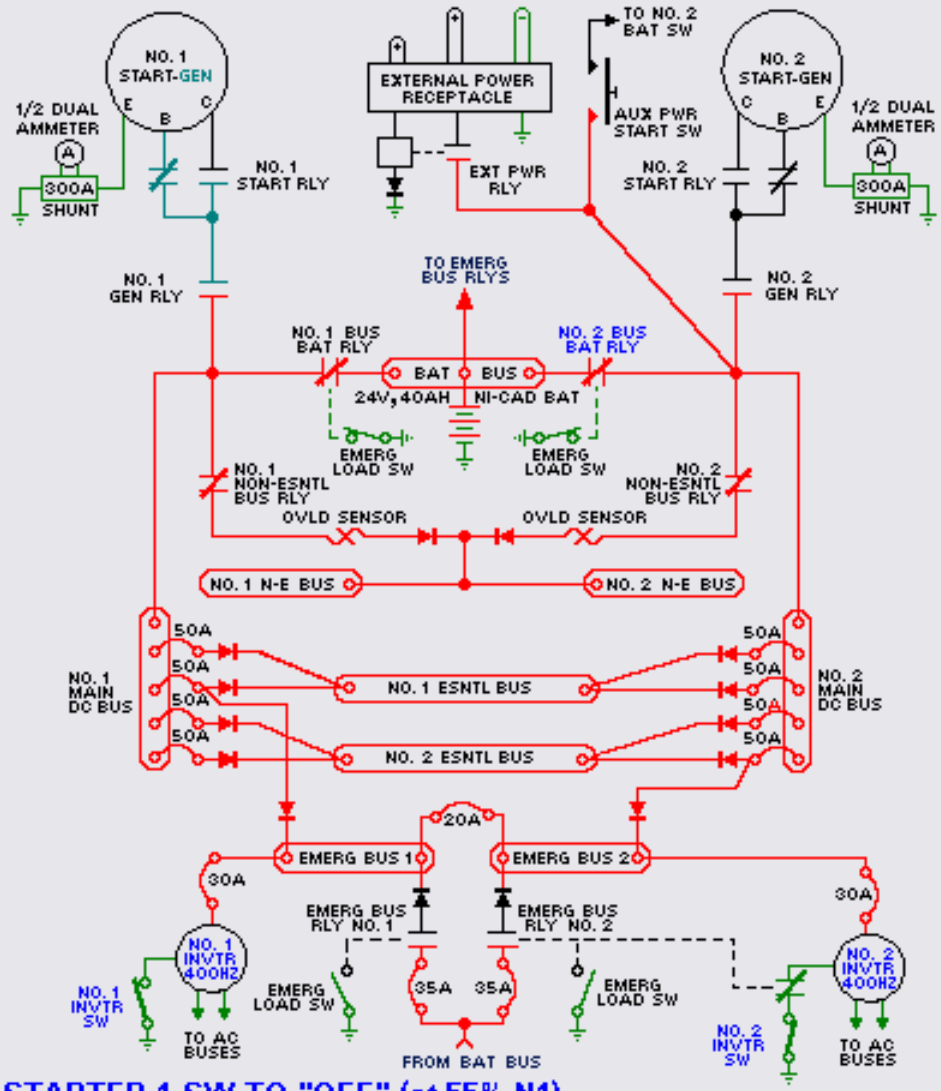

STARTER 1 SW TO "OFF" (at 55% N1)

Electrical Power System

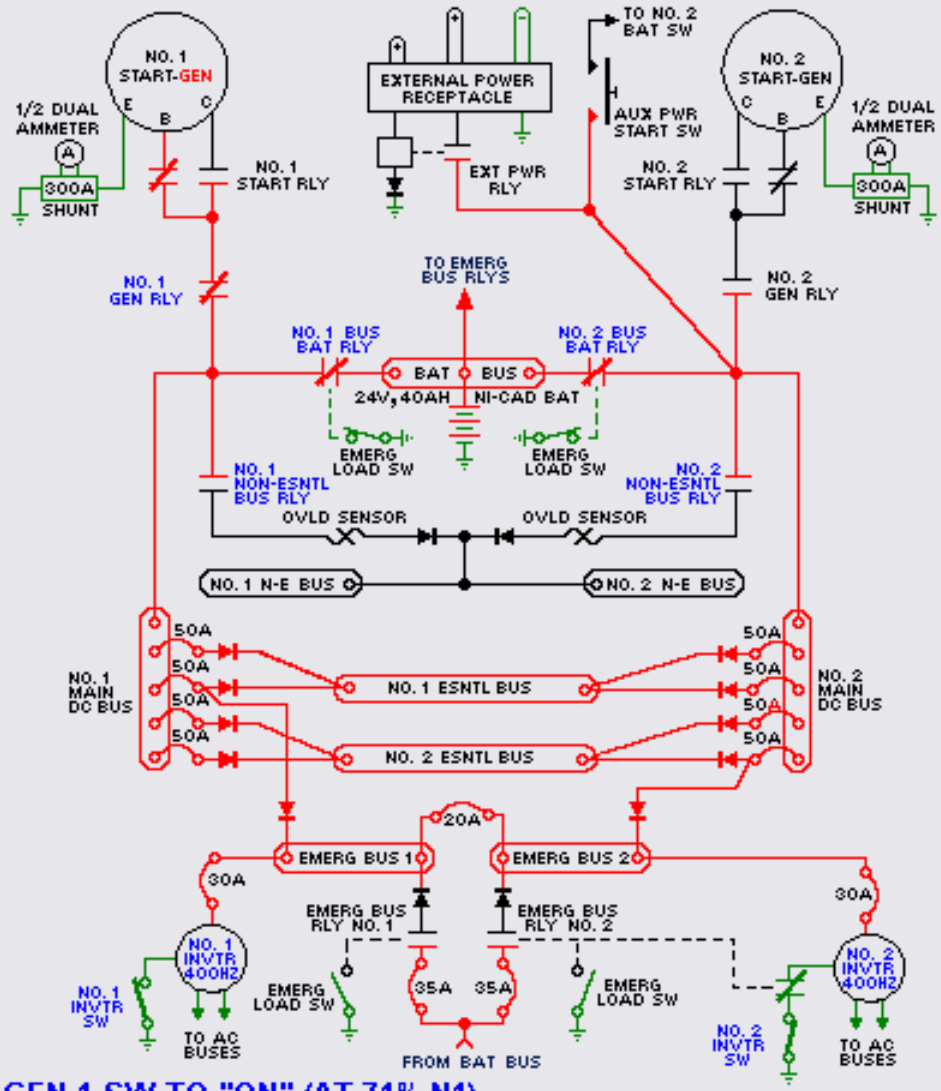

GEN 1 SW TO "ON" (AT 71% N1)

Electrical Power System

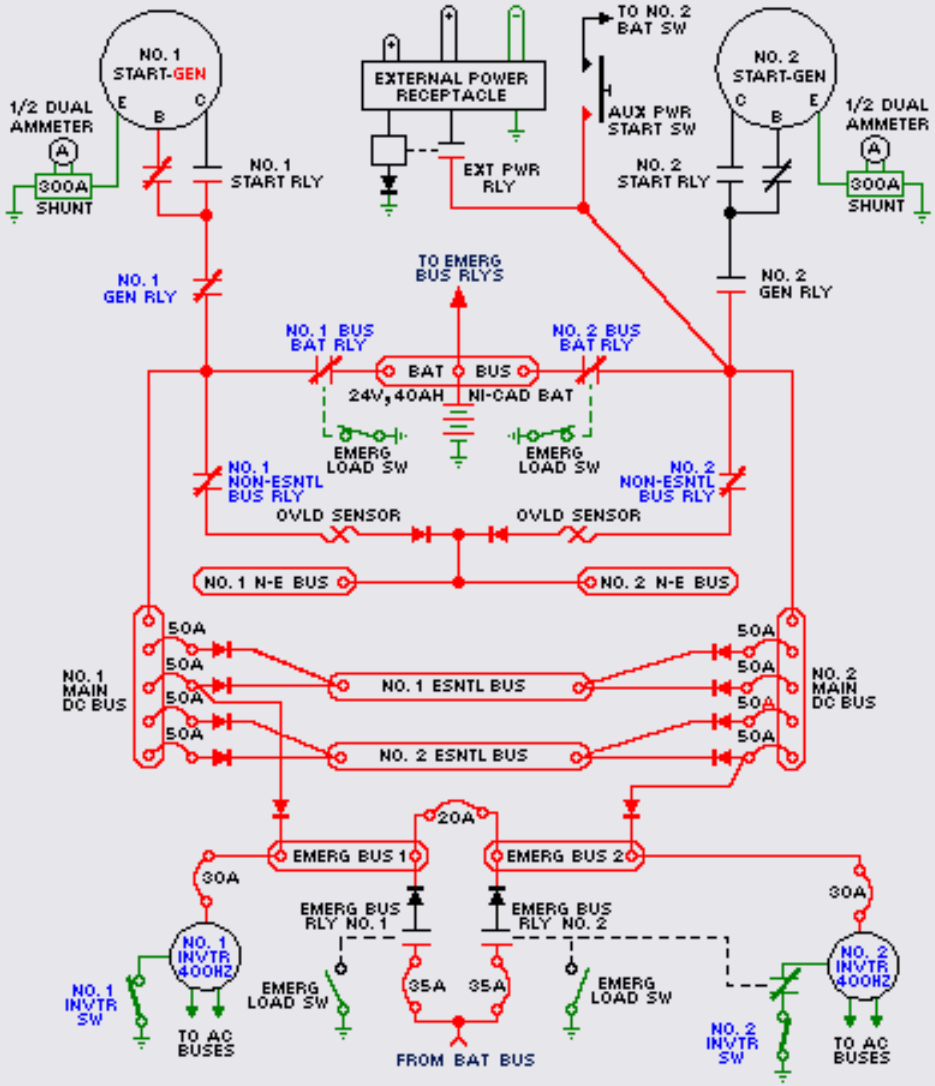

NON-ESNTL BUS SW BACK TO "MANUAL"

Electrical Power System

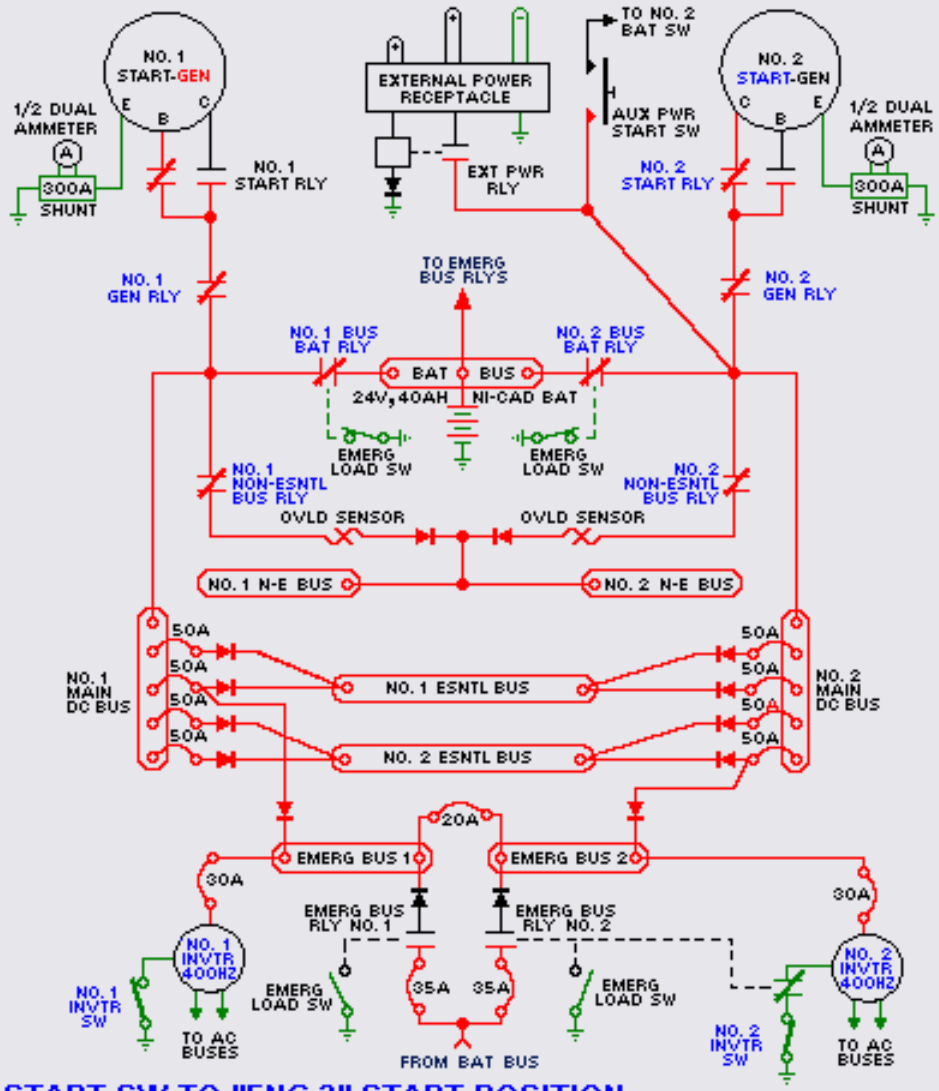

START SW TO "ENG 2" START POSITION

Electrical Power System

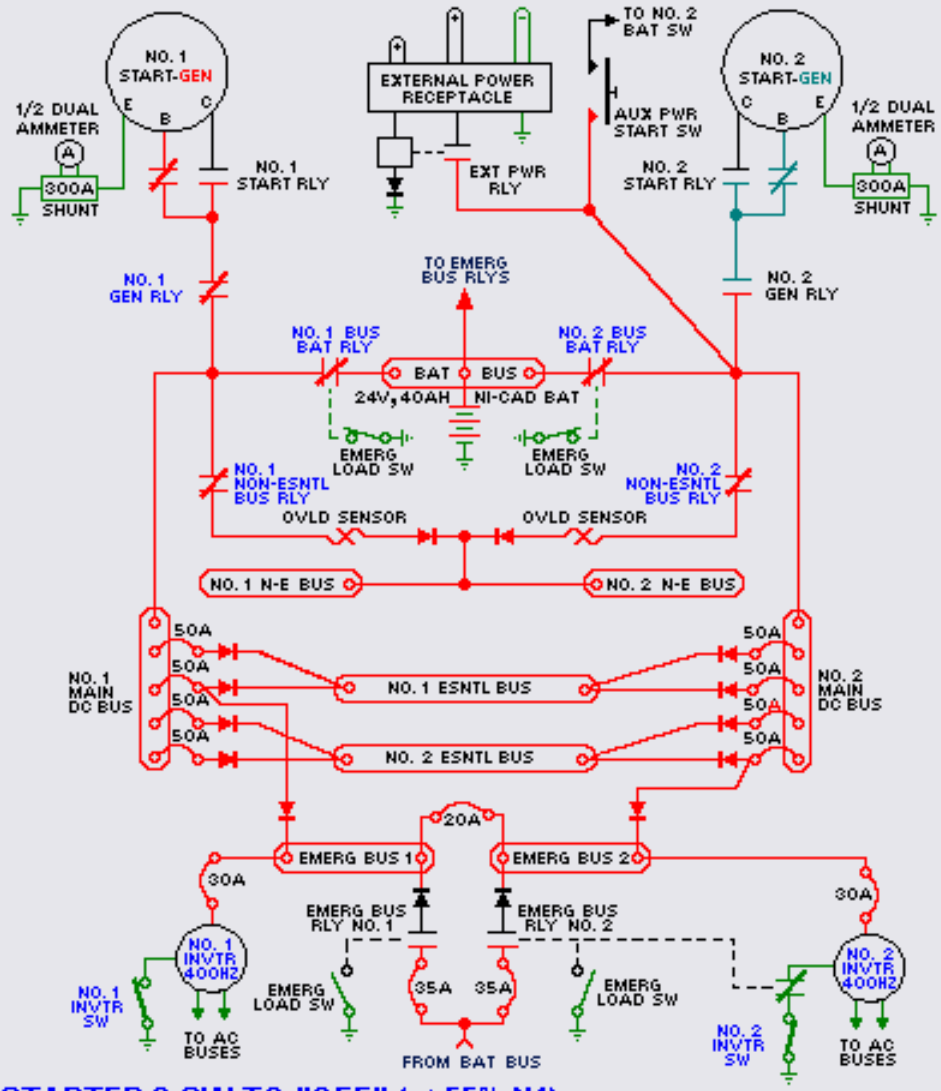

STARTER 2 SW TO "OFF" (at 55% N1)

Electrical Power System

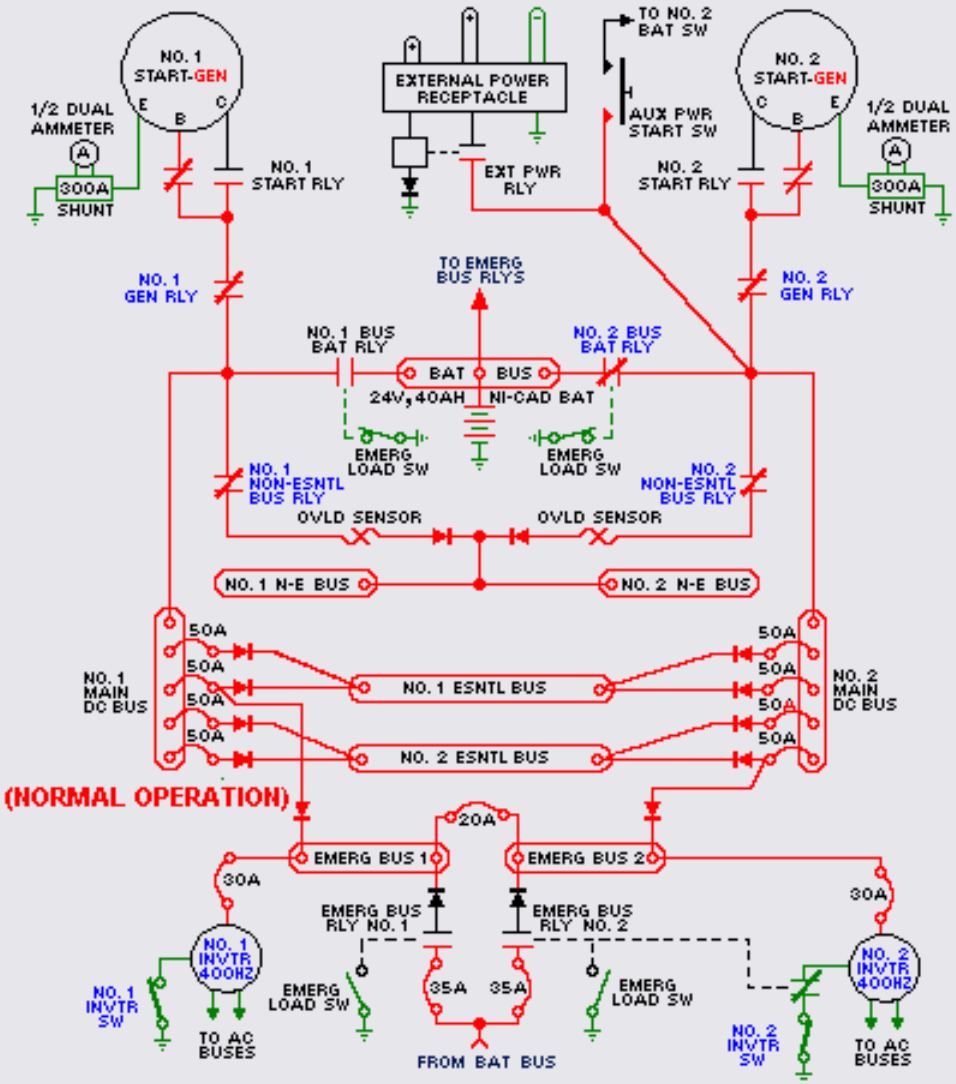

GEN 2 SW TO "ON": BAT 1 SW 'OFF'; & NEB SW TO 'NORMAL'

Electrical Power System

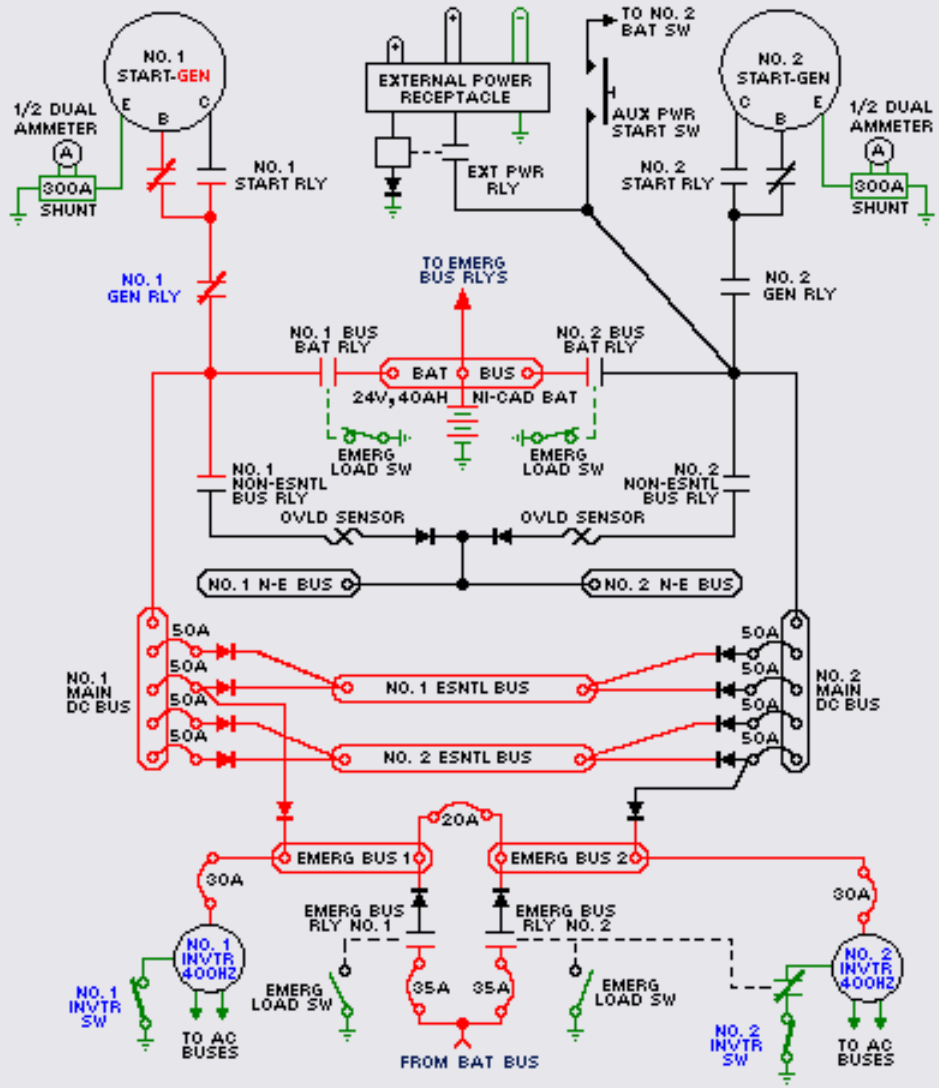

GEN 2 TRIPS OFF LINE. NON-ESNTL BUSES DROP OFF LINE.

Electrical Power System

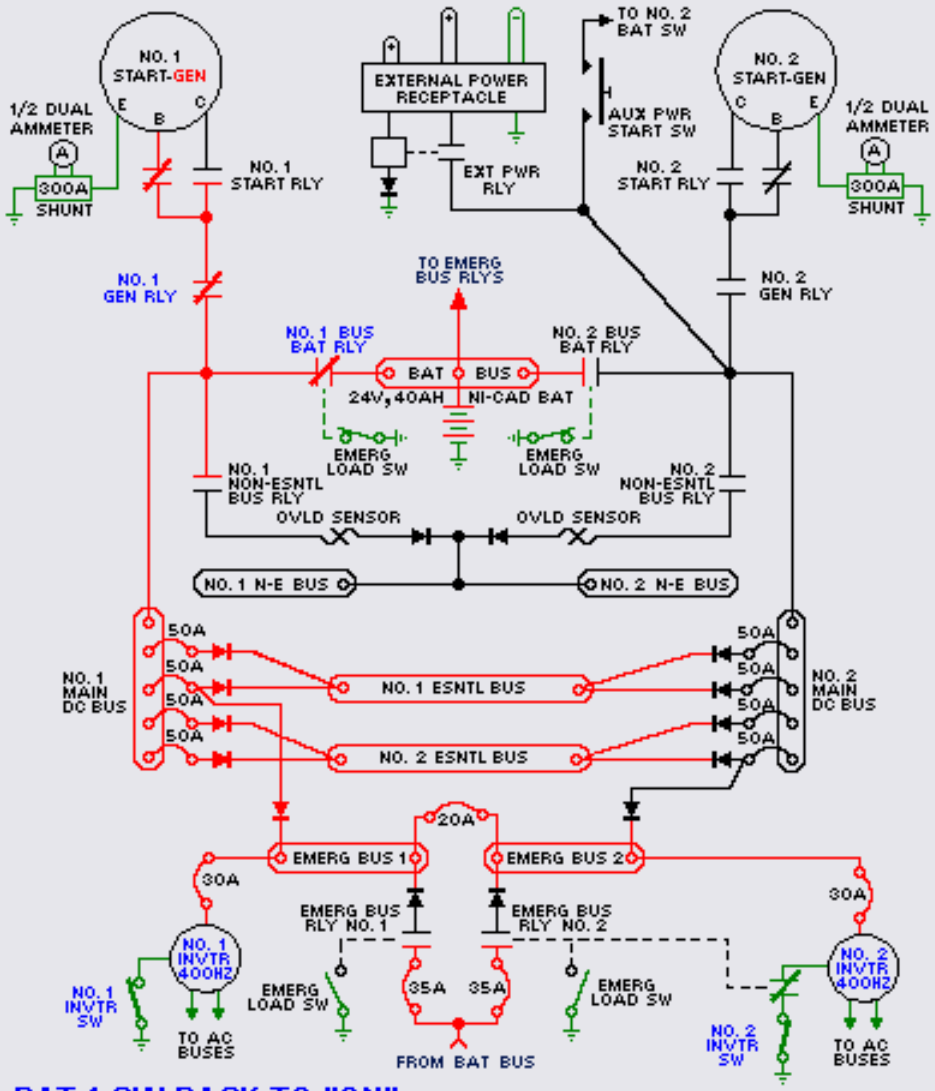

BAT 1 SW BACK TO "ON"

Electrical Power System

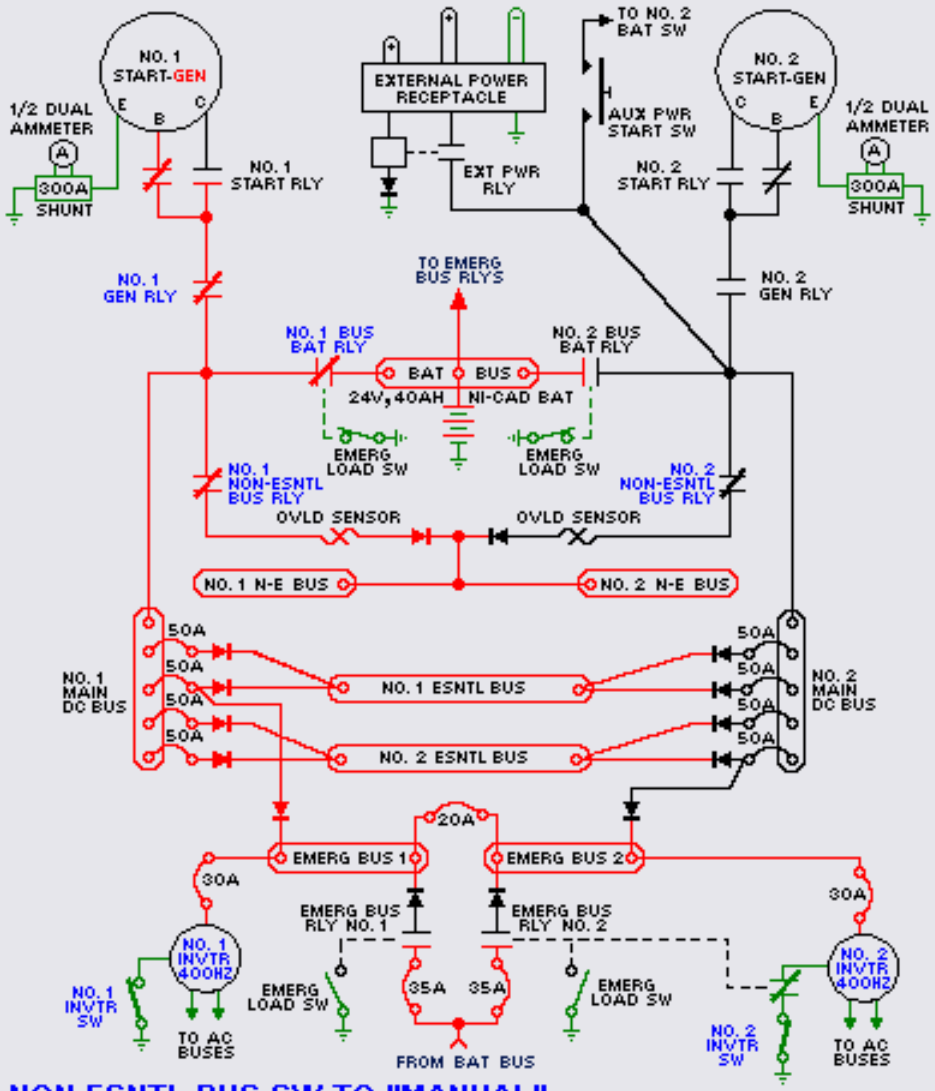

NON-ESNTL BUS SW TO "MANUAL"

Electrical Power System

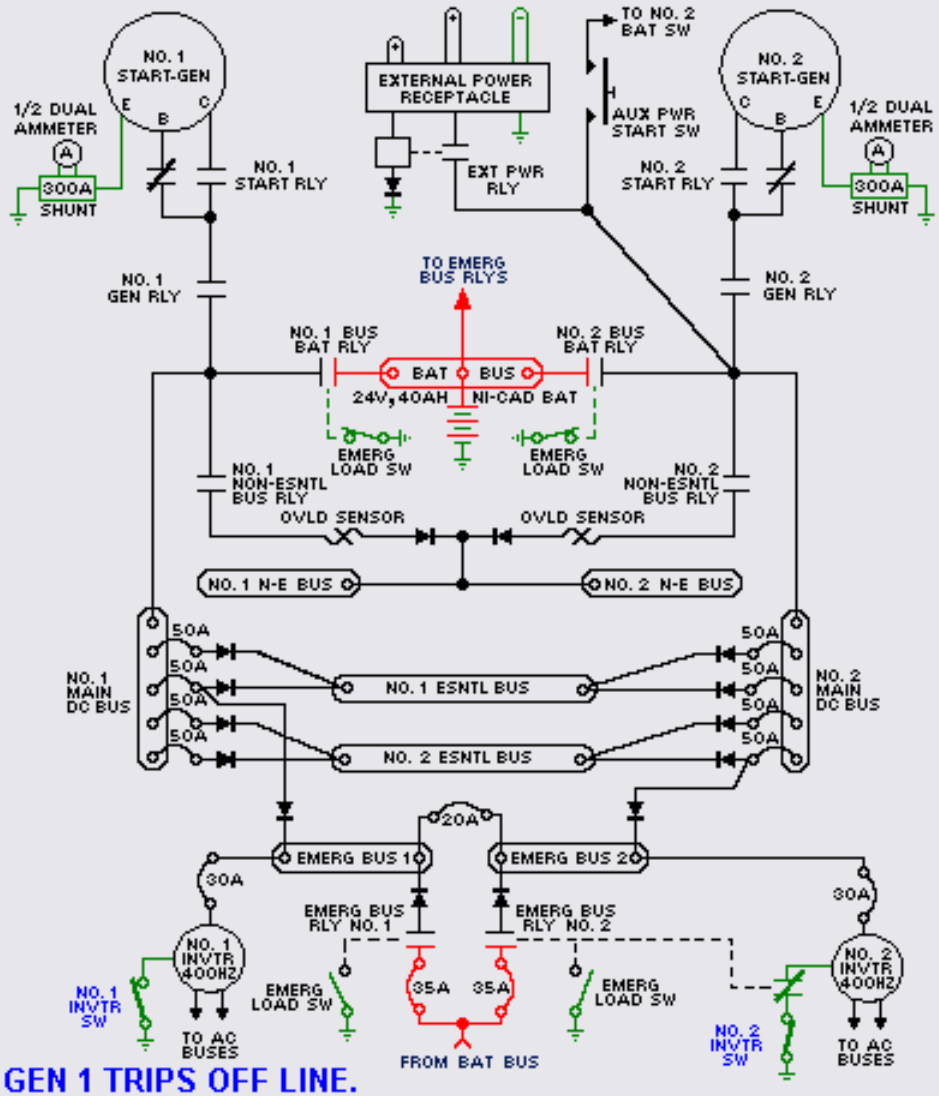

GEN 1 TRIPS OFF LINE.

(Bus voltages lost; Bat Sw(s) trip to "OFF"; and Non-Esntl Bus Sw trips to "NORMAL")

Electrical Power System

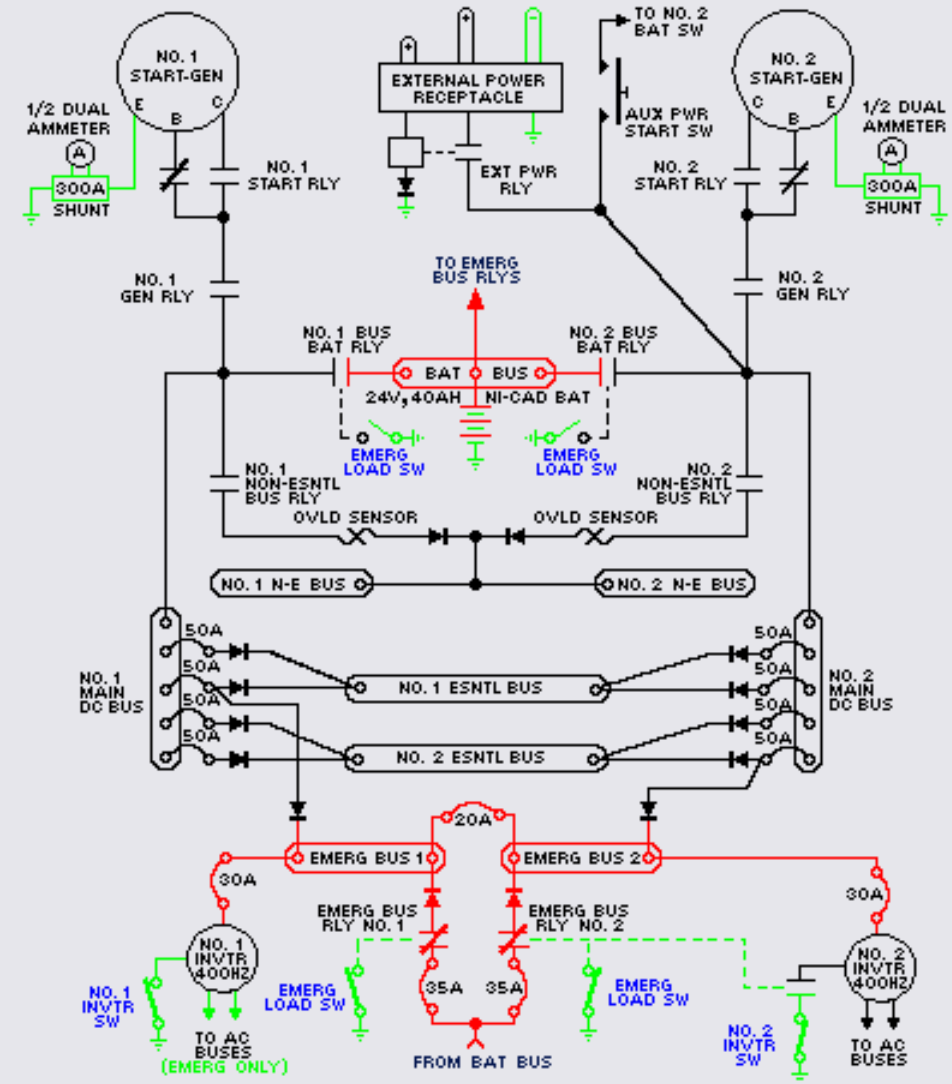

EMERG LOAD SW TO "EMERG LOAD". (Interlock Relay trips Inverter 2)

Electrical Power System

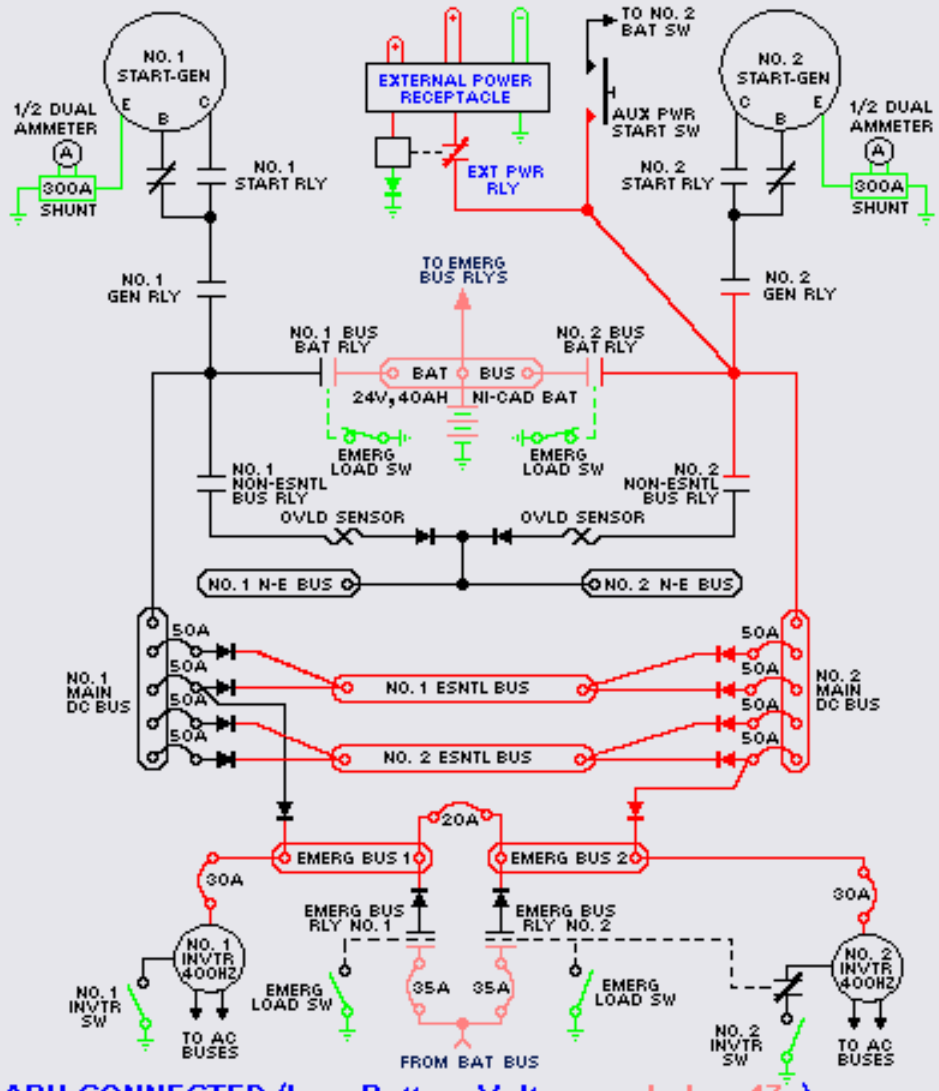

APU CONNECTED (Low Battery Voltage -- below 17v)

Electrical Power System

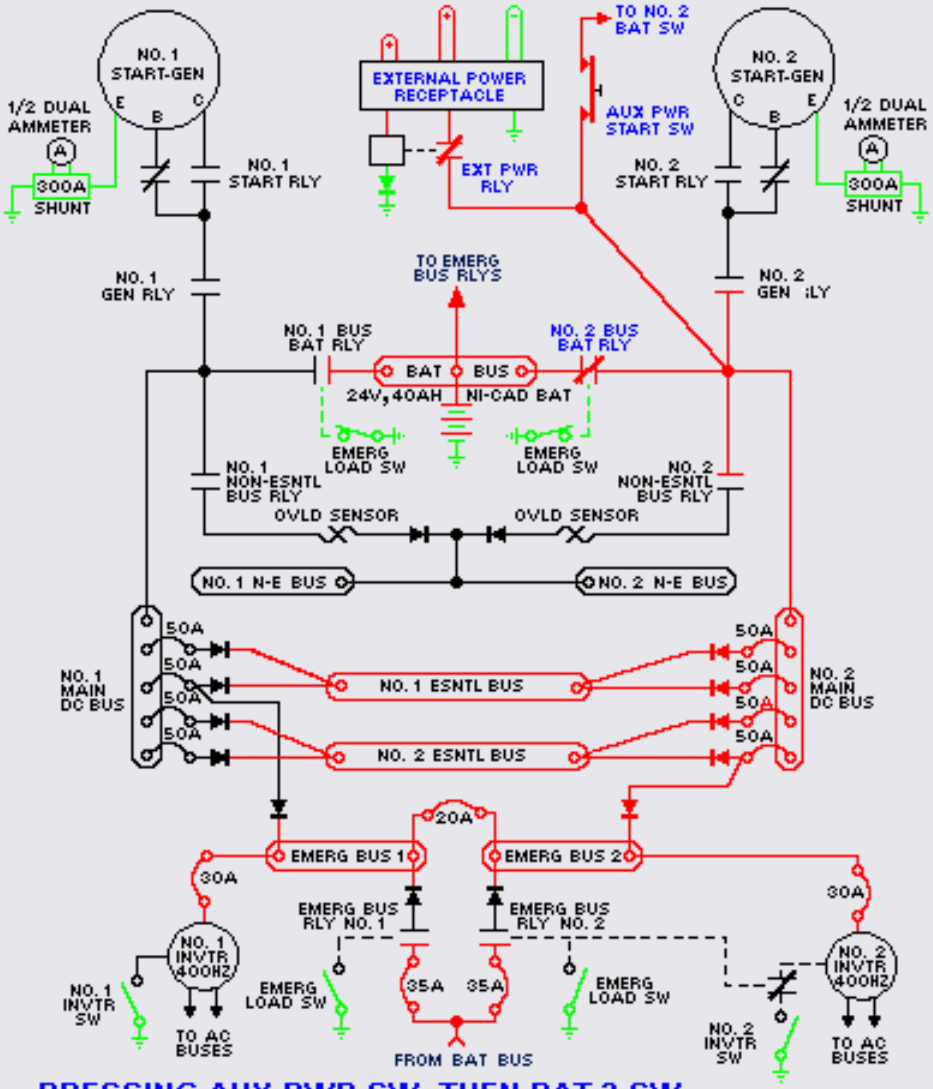

PRESSING AUX PWR SW; THEN BAT 2 SW

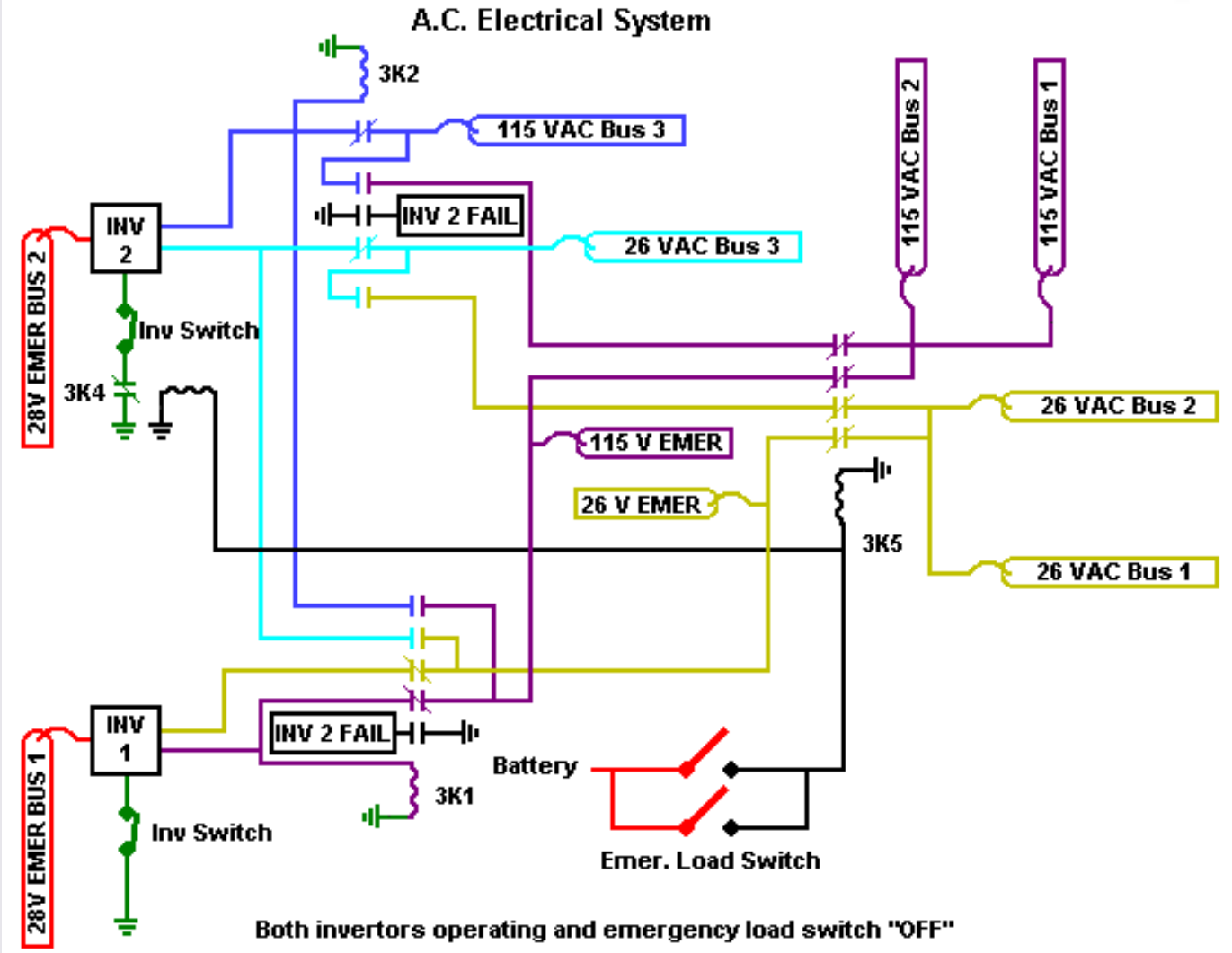
A.C. Electrical System
3K2
115 VAC Bus 3
INV 2 FAIL
26 VAC Bus 3
INV 2
28V EMER BUS 2
Inv Switch
3K4
115 VAC Bus 2
115 VAC Bus 1
26 VAC Bus 2
115 V EMER
26 V EMER
3K5
26 VAC Bus 1
INV 1
INV 2 FAIL
28V EMER BUS 1
Inv Switch
3K1
Battery
Emer. Load Switch
Both invertors operating and emergency load switch "OFF"

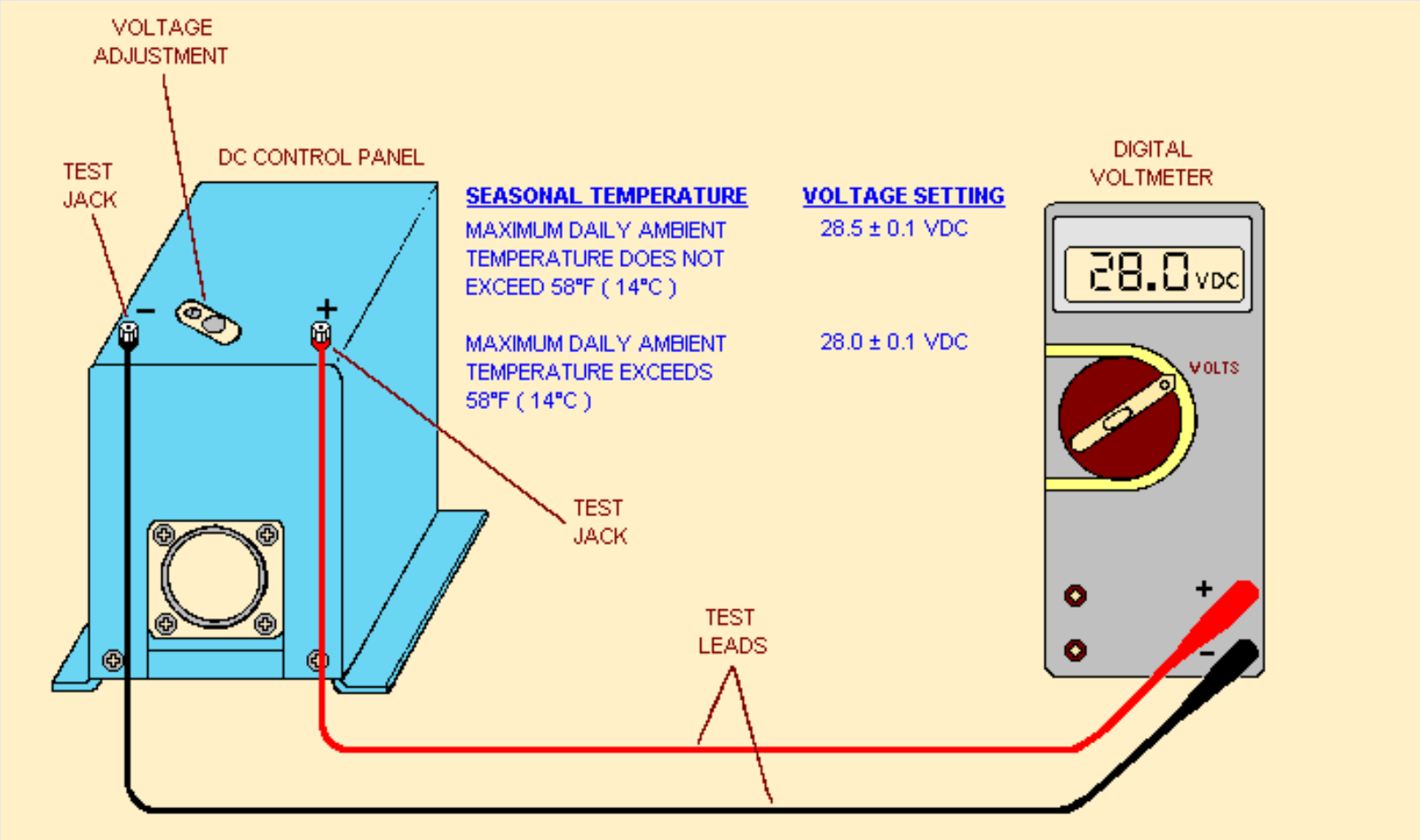
VOLTAGE ADJUSTMENT
DC CONTROL PANEL
TEST JACK
SEASONAL TEMPERATURE
VOLTAGE SETTING
MAXIMUM DAILY AMBIENT TEMPERATURE DOES NOT EXCEED 58°F (14°C)
28.5 ± 0.1 VDC
MAXIMUM DAILY AMBIENT TEMPERATURE EXCEEDS 58°F (14°C)
28.0 ± 0.1 VDC
DIGITAL VOLTMETER
28.0 VDC
VOLTS
TEST JACK
TEST LEADS

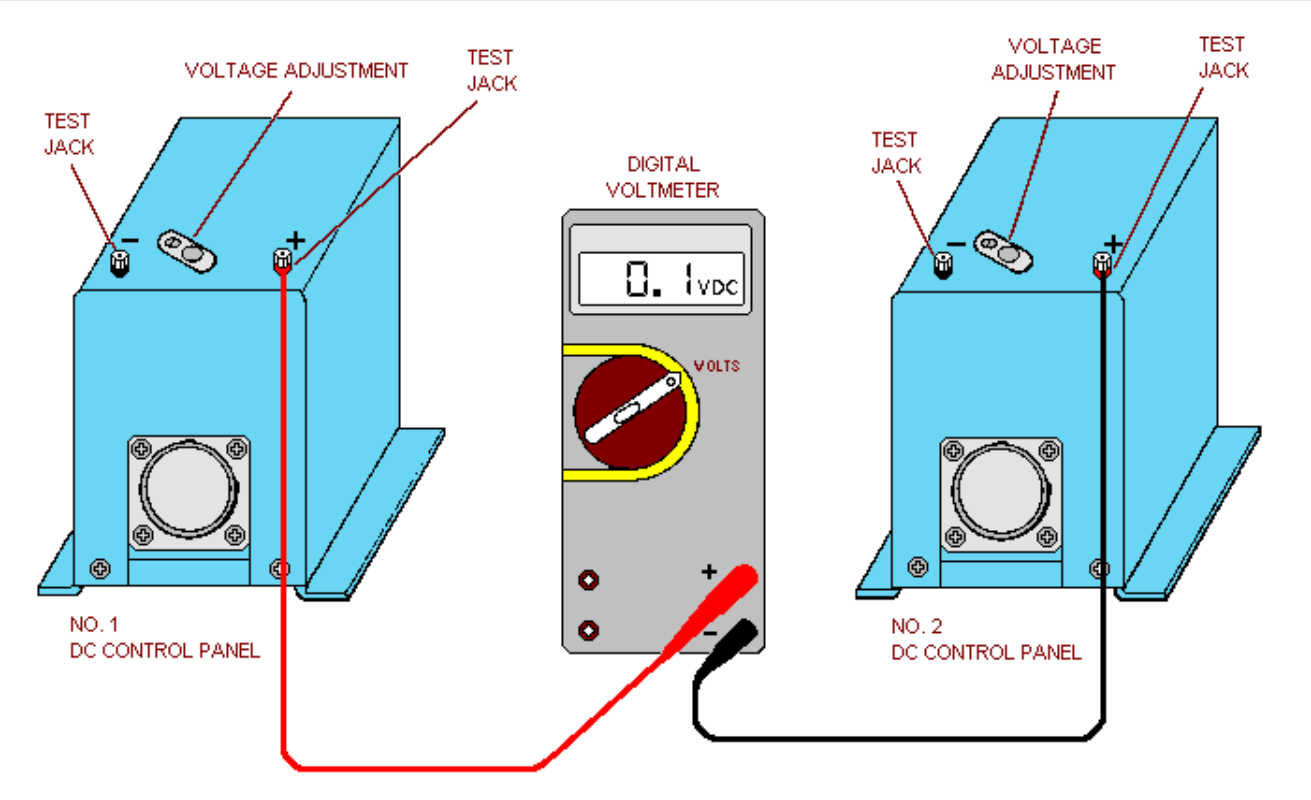
VOLTAGE ADJUSTMENT
TEST JACK
TEST JACK
DIGITAL VOLTMETER
0. 1VDC
VOLTS
VOLTAGE ADJUSTMENT
TEST JACK
TEST JACK
NO. 1 DC CONTROL PANEL
NO. 2 DC CONTROL PANEL

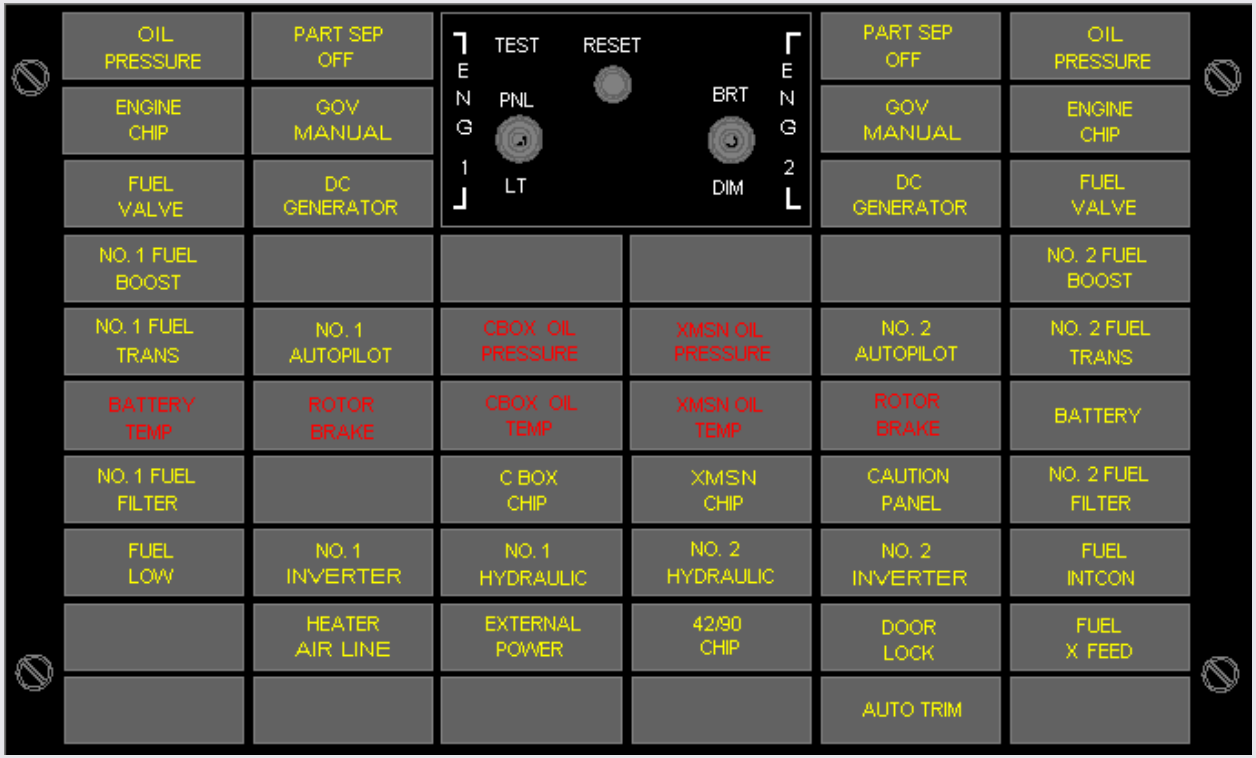
OIL PRESSURE
PART SEP OFF
ENGINE CHIP
GOV MANUAL
FUEL VALVE
DC GENERATOR
NO. 1 FUEL BOOST
NO. 1 FUEL TRANS
NO. 1 AUTOPILOT
BATTERY TEMP
ROTOR BRAKE
NO. 1 FUEL FILTER
FUEL LOW
NO. 1 INVERTER
HEATER AIR LINE
ENG 1
TEST
RESET
PNL
LT
BRT
DIM
ENG 2
CBOX OIL PRESSURE
XMSN OIL PRESSURE
CBOX OIL TEMP
XMSN OIL TEMP
C BOX CHIP
XMSN CHIP
NO. 1 HYDRAULIC
NO. 2 HYDRAULIC
EXTERNAL POWER
42/90 CHIP
PART SEP OFF
OIL PRESSURE
GOV MANUAL
ENGINE CHIP
DC GENERATOR
FUEL VALVE
NO. 2 FUEL BOOST
NO. 2 AUTOPILOT
NO. 2 FUEL TRANS
ROTOR BRAKE
BATTERY
CAUTION PANEL
NO. 2 FUEL FILTER
NO. 2 INVERTER
FUEL INTCON
DOOR LOCK
FUEL X FEED
AUTO TRIM

ELECTRICAL

412 REVIEW

1. The two basic modes of autopilot of the 412 are SAS and ATT.
2. The ATT mode provides long term stabilization for hands off flying.
3. All Autopilot and Flight Director functions are performed by the Digital Flight Control Computer.
4. When Autopilot No. 1 is engaged, the AP 1 annunciator light will be illuminated.
5. There are 2 linear (series) actuators located on each control rod assembly.
6. Each parallel trim actuator has 100 % control authority.
7. The Air Data Sensors are located in the Upper nose on the left side.
8. The Radio Altimeter Antennae are located on the lower side of the tailboom.
9. To engage the autopilot in ATT mode, the flight control computer must be powered up and the Force Trim switch must be "ON".
10. The schematic wiring diagrams for the 412 are located in chapter 98 of the maintenance manual.
11. In the wiring identification number, L15C20N, the wire size number is 20.
12. The primary electrical power of the 412 is supplied by two Starter generators, a battery or external power source.
13. The rating of the nicad battery in the 412 is 24 volts, and 40 ampere hours.
14. The primary function of the battery is for starting the engines and to be a backup D.C. power source.

412 REVIEW (cont.)

15. When fully charged, the electrolyte of the battery will be at the highest level.

16. A diode between the external power relay coil and ground prevents application of reverse polarity, D.C. external power, to the helicopter.

17. In normal in-flight operation, the D.C. buses that are powered would be the essential, Non-essential, and the emergency.

18. Each inverter is rated at 115/26 VAC, single phase, 400 Hertz, 450 volt-amps.

19. The two A.C. inverters are located in the Lower nose compartment.

20. During a dual generator failure in flight, the Emergency load switch is used to extend flight time.