INSPECTIONS - SECTION 2

TABLE OF CONTENTS

SUBJECT	PAGE
INSPECTIONS	2-2
TYPICAL BEARING INSTALLATION	2-5
TYPES OF ELASTOMERIC BEARINGS	2-7
SUBJECT REVIEW	2-9

These inspection requirements constitute an approved inspection program designed and recommended by Bell Helicopter Textron for the Model 412. They can be utilized by registered owners or operators who desire to develop a progressive inspection system to be used as part of the complete maintenance program for their aircraft. A written request for approval to use the progressive inspection system must be submitted to the governing civil aviation authority having jurisdiction over the area in which owner or operator is located.

The inspection intervals designated herein are the maximum allowable and should not be exceeded. When unusual local conditions, such a environmental conditions, utilization, etc., dictate, it is the responsibility of the operator to increase the scope and frequency of inspections as necessary to ensure safe operation.

Annual and Hourly Inspections shall be a visual and a thorough searching inspection to determine the airworthiness of the helicopter and components. The inspection must be conducted by qualified personnel and in accordance with quality standard aircraft practices and appropriate maintenance manuals. Comply with all applicable Alert Service Bulletins and Airworthiness Directives (A.D.)

Prior to inspection, remove or open as necessary, cowling, fairing, inspection doors and panels.

Lubrication and service requirements are in addition to those stated herein.

For detailed inspection requirements of installed kits not found in the maintenance or the component repair and overhaul manuals, refer to the appropriate Service Instruction (S.I.).

A schedule of the maintenance inspections as they appear in 412-MM Chapter 5 are as follows:

Scheduled Inspections

1. Part A Inspection Program.

a. Daily Inspection - Accomplish prior to first flight of the day.
b. 100 Hour/12 Month Inspection - Accomplish each 100 hours of flt. operation or each 12 calendar months, which ever comes first.
c. 1000 Hour Inspection - Accomplish each 1000 hours of flight operation.
d. 3000 Hour/5 year Inspection - Accomplish each 3000 hours of flt. operation or each 60 calendar months, which ever comes first.

2. Part B Inspection Program.

a. 25 Hour Inspection - Accomplish each 25 hours of flight operation
b. 300 Hour/180 Day Inspection - Accomplish each 300 hours of flight operation or after 180 calendar days, whichever comes first.
c. 600 Hour/Annual Inspection - Accomplish each 600 hours of flight operation or each 12 calendar months, whichever comes first.

d. 3000 Hour/5-year Inspection - Accomplish each 3000 hours of flight operation or each 60 calendar months, whichever comes first.

Either series of inspections may be utilized. However, once a helicopter has been started on either inspection program, it shall be maintained on that program except as follows:

If a helicopter is being inspected on the Part A inspection program and it is desired to change to the Part B inspection program, a complete Part A 1000 hour inspection shall be accomplished. The helicopter may then be changed to the Part B inspection program beginning with the 25 hour inspection

If a helicopter is being inspected on the Part B inspection program and it is desired to change to the Part A inspection program, a complete Part B 600 hour inspection shall be accomplished. The helicopter may then be changed to the Part A inspection program beginning with the Daily inspection

Unscheduled Inspections

1. **Special Inspections** - Required for certain systems or components at other than normal time intervals.

2. **Conditional Inspections** - Required for certain systems, and/or components after unusual events, such as hard landings or sudden stoppage of rotor, etc.

NOTE: Refer to engine manufacturer's requirements for Conditional Inspections that apply only to the engine.

Airworthiness Limitations - Replace components in accordance with Airworthiness Limitations Schedule. Refer to Chapter 4. The airworthiness limitations schedule summarizes the maximum hours (life) or retirement index number (RIN LIFE) various components may be used before retiring from service. Parts not listed on the schedule have an unlimited airworthiness life, and are replaced based on condition.

CAUTION: AIRWORTHINESS LIFE OF SOME KIT (S.I.) COMPONENTS ARE NOT COVERED IN THIS SCHEDULE. REFER TO APPLICABLE SERVICE INSTRUCTIONS FOR KIT COMPONENT SCHEDULE.

Overhaul Limitations - Overhaul components in accordance with overhaul schedule. Refer to paragraph 5-34

WARNING: SOME PARTS ARE INSTALLED AS ORIGINAL EQUIPMENT ON MILITARY HELICOPTERS AND MAY HAVE A LOWER AIRWORTHINESS LIFE AND/OR OVERHAUL SCHEDULE THAN WHEN USED ON A COMMERCIAL HELICOPTER. CONSEQUENTLY, PARTS THAT HAVE BEEN USED ON MILITARY HELICOPTERS SHOULD NOT BE USED ON COMMERCIAL HELICOPTERS.

TYPICAL BEARING INSTALLATION

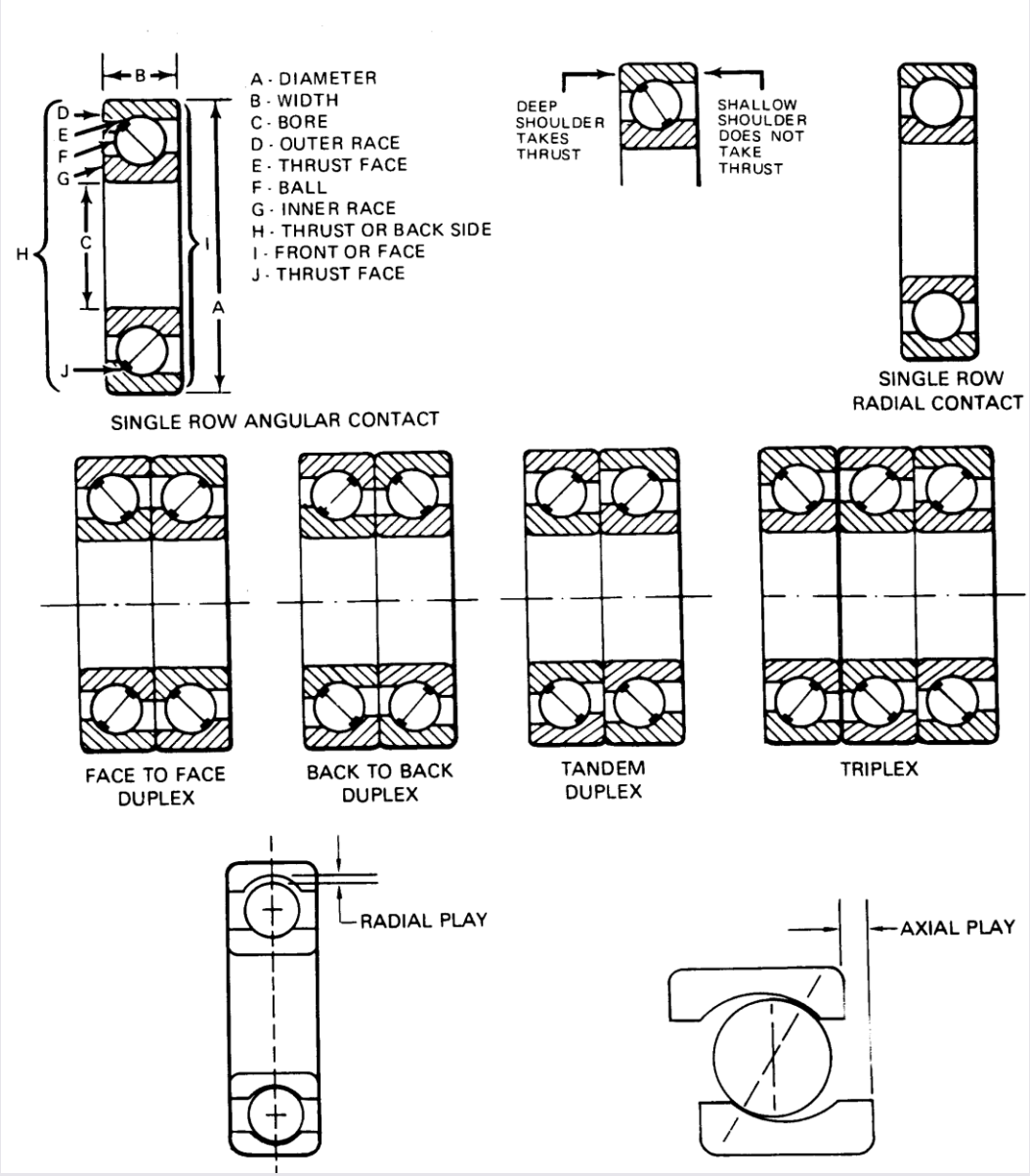

BEARING INSPECTION TERMINOLOGY

a. Brinelling: Surface depressions produced by a severe blow, extremely heavy pressure, or rollers skidding or sliding instead of rolling.

b. Galling: Aggravated condition of wear, generally caused by rubbing action with little or no lubrication.

c. Pitting: Small holes or indentations, generally caused by rust, corrosion, high compressive stresses or metal to metal pounding.

d. Scoring: Very deep scratches caused by foreign particles between surfaces that are moving, or between one moving and one stationary surface. Scores follow the direction of travel of the part.

e. Scratching: Narrow shallow lines resulting from movement of foreign particles across a surface.

f. Spalling: Chipped or flake surface caused by the breaking away of the hardened surface layer of the metal. A surface fatigue condition which occurs from the undermining of the hardened metal and separation of the case from the core.

TYPES OF ELASTOMERIC BEARINGS

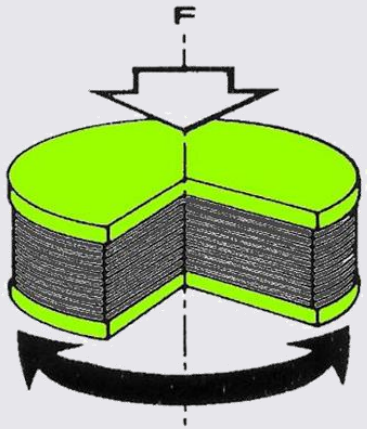

DAMPER SET TYPE BEARING

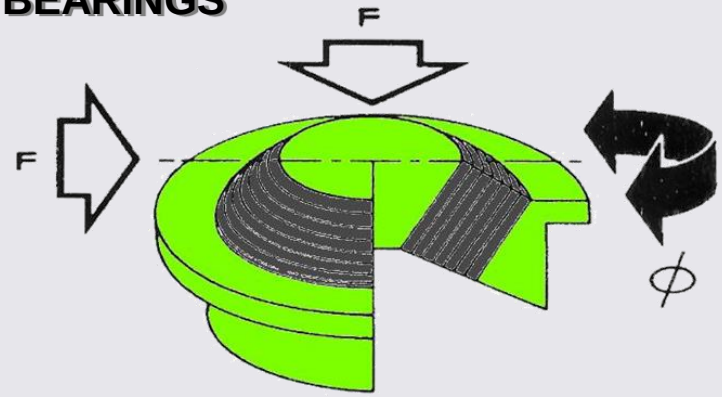

PIVOT BEARING

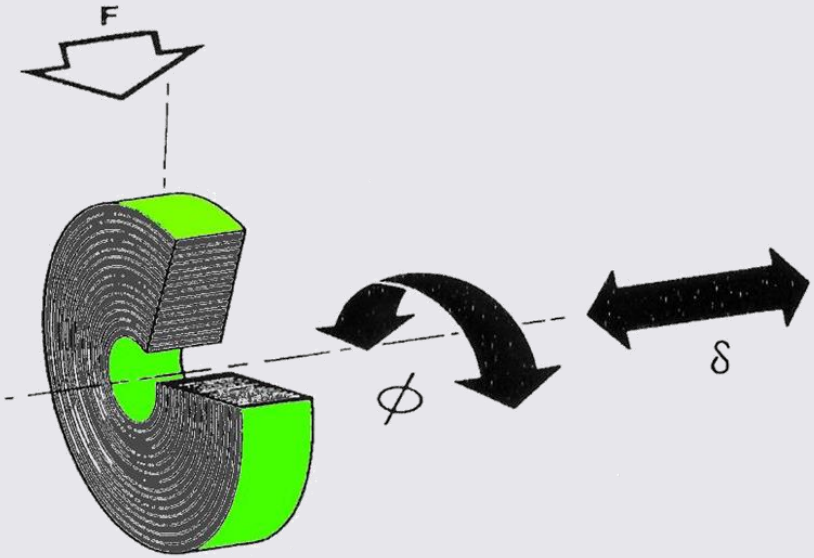

SPINDLE / DAMPER BEARING

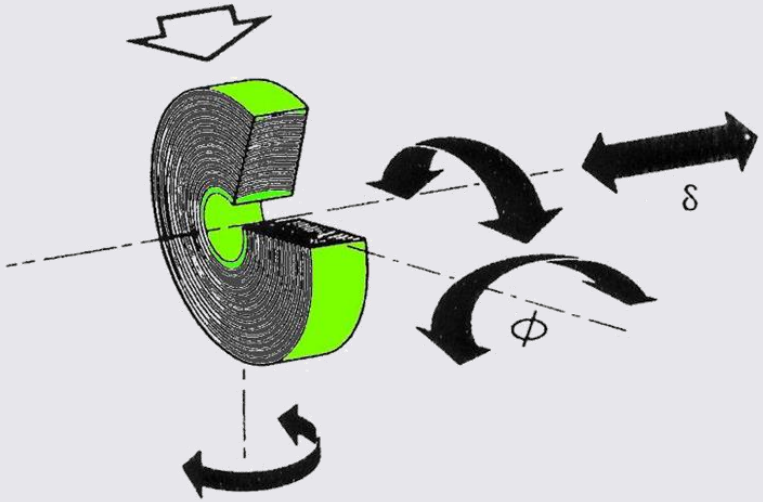

ROD END BEARING

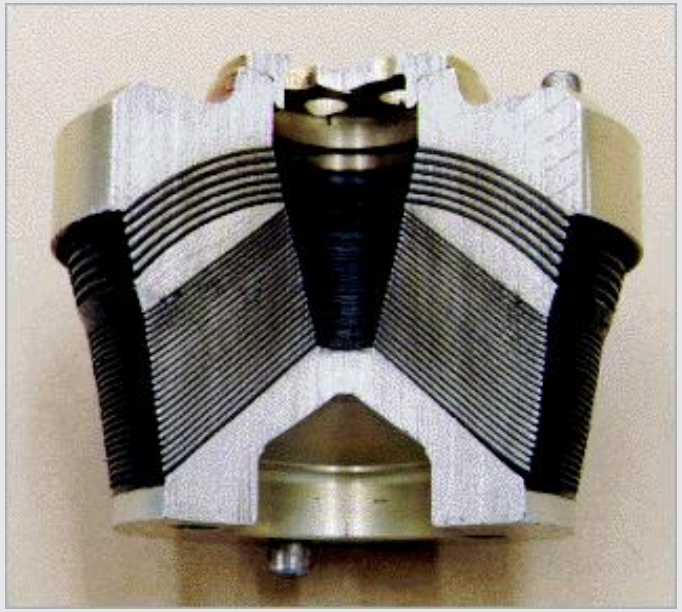

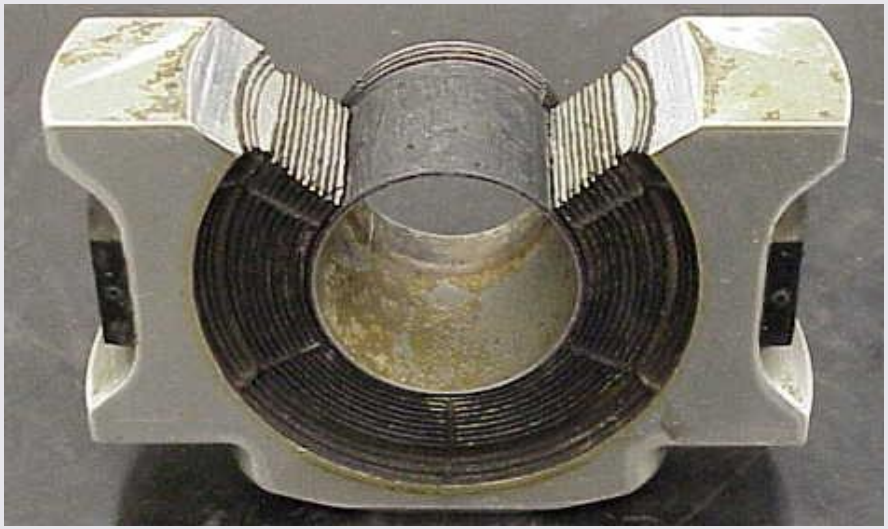

INSPECTIONS

BEARING INSPECTION TERMINOLOGY

a. Sheeting: Layer of elastomer rubber protruding from component.

b. Crumbling: Small eraserlike dust particles of elastomer separating from component.

c. Extruding: Strings of elastomer rubber being produced by component.

d. Delamination: bond line failure or separation, requires a strong light to inspect.

ELASTOMERIC BEARINGS

An elastomeric bearing consists of bonded or vulcanized layers of elastomer and metal shims. The different sizes and shapes are determined by the loads imposed upon the bearing. Various configurations have been designed to accommodate different modes of static and/or oscillatory loads and motions. The elastomer is bonded to the metal shims as well as to the attaching major metal components. These major metal components may be considered the bearing races and in many bearings are critical structural helicopter rotor or fuselage parts. The layers of elastomer used in these bearings may be either natural rubber or synthetic elastomer and may be designed as thin as .015" with corresponding shims of the same thickness. The shim material normally is an alloy steel, stainless steel or aluminum but may be any material with sufficient strength to handle the bearing shim stresses.

There are four basic types of elastomeric bearings used in the 412 rotor and controls. The first type is the Conventional Thrust Bearing (Damper Set) designed to carry high axial loads in compression while accommodating torsional motions through shear loading of the elastomer. The second type involves the Conical Bearing (Pivot Bearing) which can carry high loads in both the axial and radial directions while accommodating torsional motions. The third type is the Radial-Journal Bearing (Damper / Spindle Bearing). It carries high radial loads while accommodating torsional and axial motions in the shear mode. The fourth type is the Rod-End Bearing. It carries high radial loads while accommodating motions in the torsional and misalignment directions as well as some axial motions depending on the actual shim geometry. Special variations or combinations of any of the above basic configurations can be incorporated into one bearing depending on need. Elastomeric bearings should be cleaned with mild soap and water only.

412 REVIEW INSPECTIONS

1. A _____SPECIAL_____ inspection is required for systems or components requiring attention at other than the normal time intervals.

2. Checking the torque of the tail rotor retaining nut after 1 - 10 hours of flight is a _____SPECIAL_____ inspection.

3. If the 300 hour / 180 day inspection is completed at 150 calendar days, it will have to be accomplished again in _____300_____ hrs or _____180_____ days.

4. To find the maximum allowable play limits of most ball type bearings you would check the _____STANDARD PRACTICES_____ Manual.

5. To extend the life of elastomeric bearings, you should wash them periodically with mild _____SOAP_____and water.