STATION DIAGRAM #1

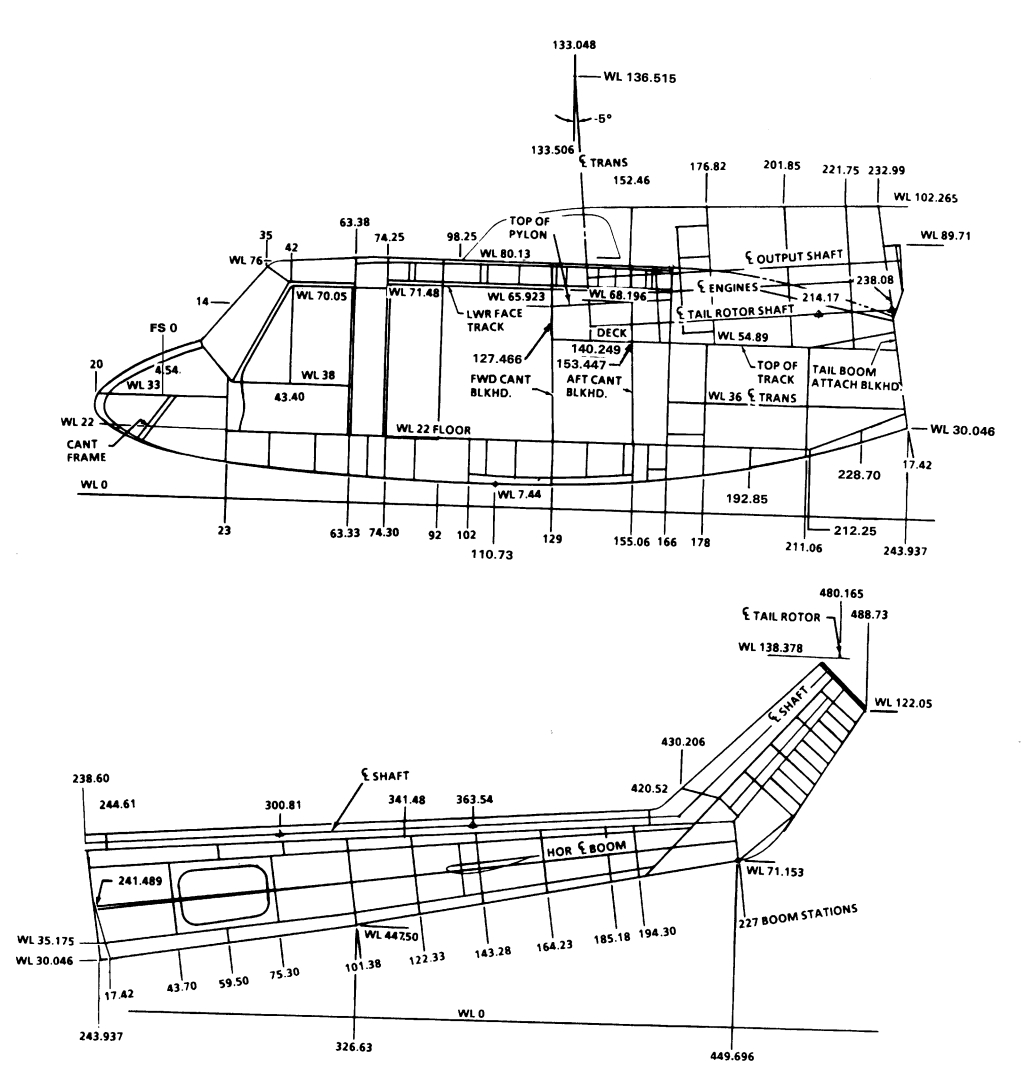

Fuselage stations, water lines, and butt lines are used to locate specific points on the airframe. This information is utilized in weight and balance, component location, and repair or replacement of airframe structure parts. All numbers are in inches, fuselage stations numbers begin at station number zero, called the reference datum line, and run vertically thru the fuselage. Station numbers forward of the reference datum line are minus numbers and numbers aft of the datum line are plus numbers. Fuselage station zero is located 20" aft of the tip of the standard nose. Water lines begin below the fuselage and run horizontally thru the fuselage numbered from bottom to top.

STATION DIAGRAM #2

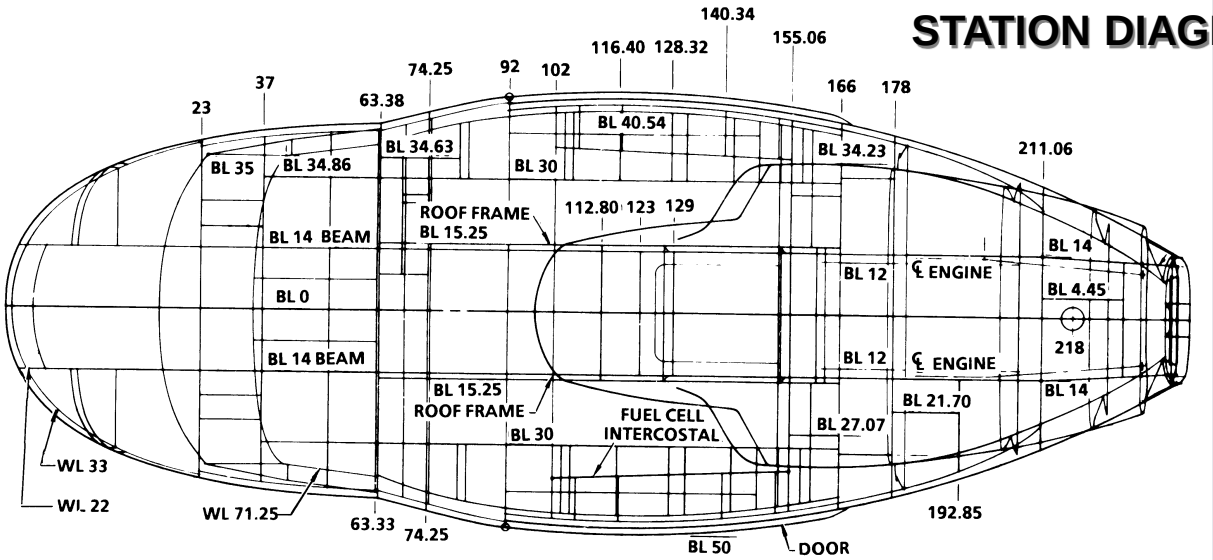

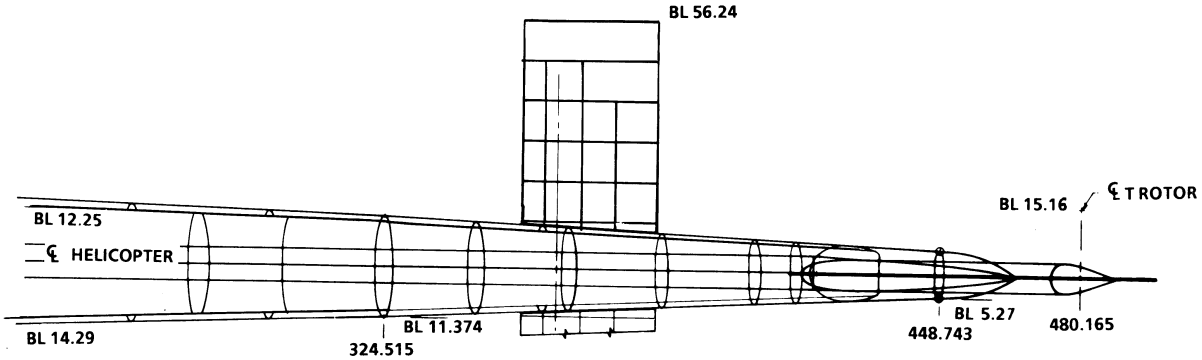

Butt lines begin at the center line of the fuselage and run left and right of the center line in a horizontal plane. Butt lines right are plus numbers and butt lines left are minus numbers.

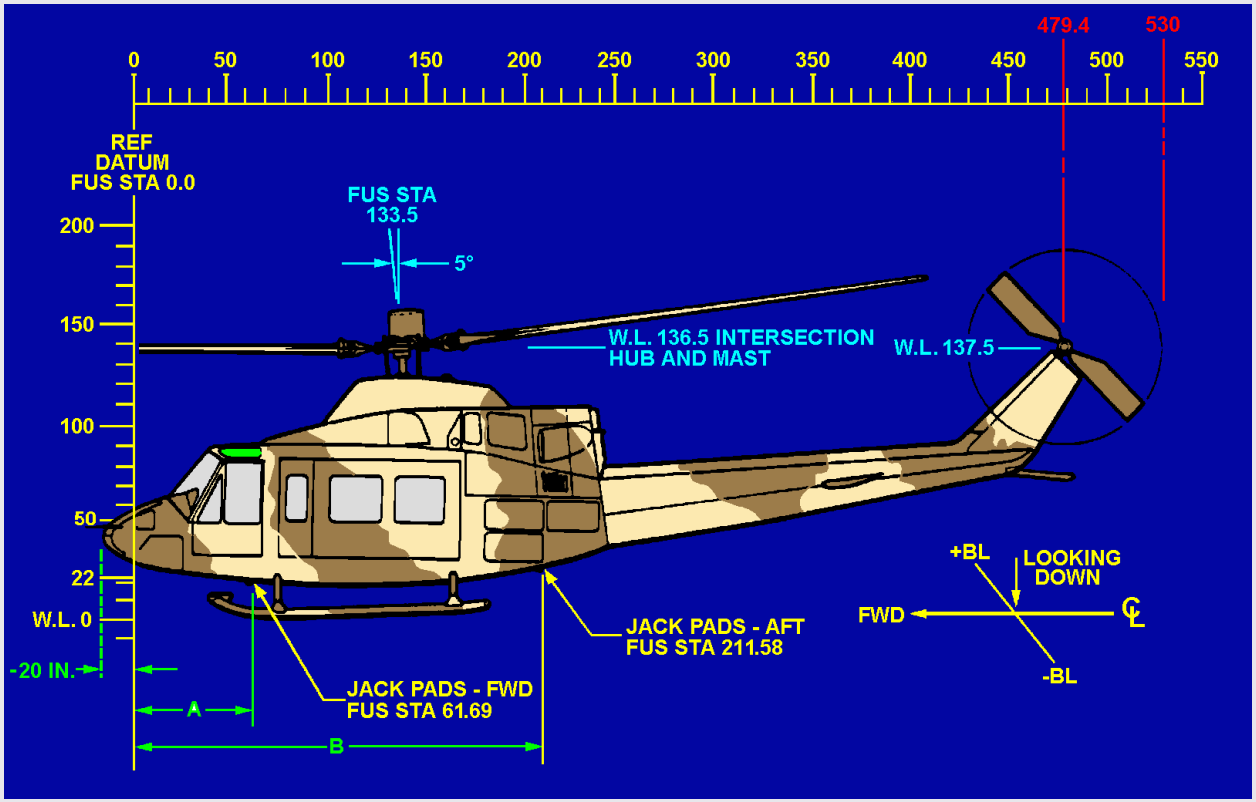

Forward Jackpoint F.S. 61.69 B.L. ± 30.0
Aft Jackpoint F.S. 211.58 B.L. ± 14.53

$$\text{As weighed CG} = \frac{(\text{Net Wt. Fwd Scales})(61.69) + (\text{Net Wts. Aft Scales})(211.58)}{\text{Total Net(As Weighed) Weight}}$$

The center of gravity (CG) is considered to be the balancing point of a body for weight and balance purposes. The helicopter can be compared to a pendulum, the point of suspension being where the main rotor hub intersects the mast and the pendulum weight being the helicopter. If the pendulum weight is allowed to stop, it will come to rest directly below the suspension point. For example: If the CG of a helicopter is aft of the hub mast intersection, the helicopter will be tail down in flight. The pilot can correct this condition by moving the cyclic control stick forward. If the required movement of the stick is great enough, the pilot will have used all available control, thus limiting maneuverability and forward speed. Since such loss of maneuverability is unsafe, care must always be taken to keep the helicopter center of gravity within specified limits. Moving the C.G. is accomplished by adding or subtracting ballast.

JACKING AND LEVELING

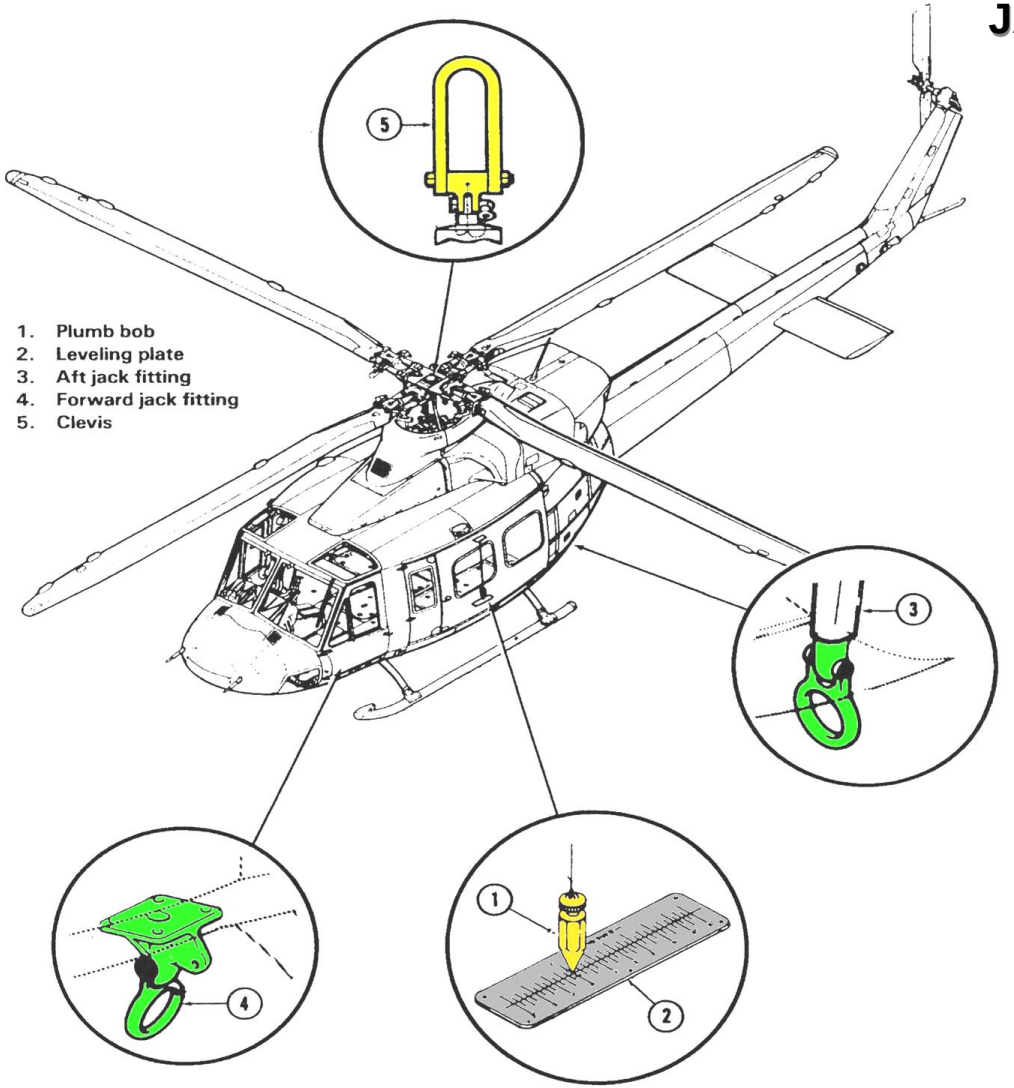

The helicopter has four jack pads, two just forward of the forward cross tube and two aft of the rear cross tube. Standard aircraft jacks may be used to raise and level the helicopter. Located on the cabin floor just inside of the left passenger-cargo door is the leveling plate graduated in one quarter of a degree increments. A slotted hole in the upper frame of the left sliding door is provided for suspension of a plumb bob.

SAMPLE WEIGHT RECORD

BELL HELICOPTER TEXTRON
ACTUAL WEIGHT RECORD
MODEL 412
33108 & SUB

DATE WEIGHED 11-1-83 SERIAL NUMBER SAMPLE

SCALE READINGS (LBS.)	EMER. FLOAT CONFIGURATION		SCALE	TARE	NET
FORWARD JACKPOINT, F.S. 61.69	B.L. - 30.0		550.0	0	550.0
FORWARD JACKPOINT, F.S. 61.69	B.L. + 30.0		2521.5	1.0	2520.5
AFT JACKPOINT, F.S. 211.58	B.L. ± 14.53		3916.6	1.0	3915.6
		TOTAL	6988.1	2.0	6986.1

*IN LATERAL CALCULATIONS
– IS LEFT
+ IS RIGHT

LONGITUDINAL C.G., AS WEIGHED

$$C.G. = \frac{61.69\ (3070.5) + 211.58\ (3915.6)}{\text{TOTAL WEIGHT}} = \frac{1017881}{6986.1} = 145.70 \text{ IN.}$$

LATERAL C.G., AS WEIGHED*

$$C.G. = \frac{-30.0\ (550.0) + 30.0\ (2520.5) - 14.53\ (3915.6)}{\text{TOTAL WEIGHT}} = \frac{+2221}{6986.1} = +0.32 \text{ IN.}$$

WEIGHT EMPTY DERIVATION	WEIGHT	LONGITUDINAL ARM	LONGITUDINAL MOMENT	LATERAL* ARM	LATERAL* MOMENT
AS WEIGHED	6986.1	145.70	1017881	+ 0.3	+ 2221
REMOVE: PLUMB BOB	– 1.0	117.5	– 118	– 44.1	+ 44
ADD: UNUSABLE FUEL	+ 47.6	128.0	+ 6093	+ 0.6	+ 29
UNDRAINABLE OIL	+ 7.1	230.7	+ 1638	0	0
PASSENGER SEATS	+ 271.4	112.0	+ 30397	0	0
(DERIVED WEIGHT)	7311.2	144.42	1055891	+ 0.3	+ 2294
BALLAST	+ 88.0	– 4.3	– 378	0	0
WEIGHT EMPTY, EMER. FLOAT CONFIG.	7399.2	142.65	1055513	+ 0.3	+ 2294

MOST FORWARD C.G.

WEIGHT EMPTY					
+ PILOT AND COPILOT	+ 340.0	47.0	+ 15980	0	0
+ PASSENGERS (4), CENTER SEAT, FACING AFT	+ 680.0	87.0	+ 59160	0	0
+ PASSENGERS (5), BACK SEAT, FACING FWD.	+ 850.0	117.0	+ 99450	0	0
+ OIL, ENGINE	+ 24.5	169.1	+ 4146	0	0
+ FUEL, MOST FORWARD (JP-5)	+ 397.0	139.9	+ 55540	0	0
	9690.7	133.1	1289789	+ 0.2	+ 2294

MOST AFT C.G.

WEIGHT EMPTY					
+ PILOT	+ 170.0	47.0	+ 7990	+ 22.0	+ 3740
+ OIL, ENGINE	+ 24.5	169.1	+ 4146	0	0
+ FUEL (JP-5) 330.5 GALLONS	+ 2247.0	151.5	+ 340421	– 0.38	– 854
	9840.7	143.1	1408070	+ 0.5	+ 5180

MODEL 412
WEIGHT EMPTY CG CHART

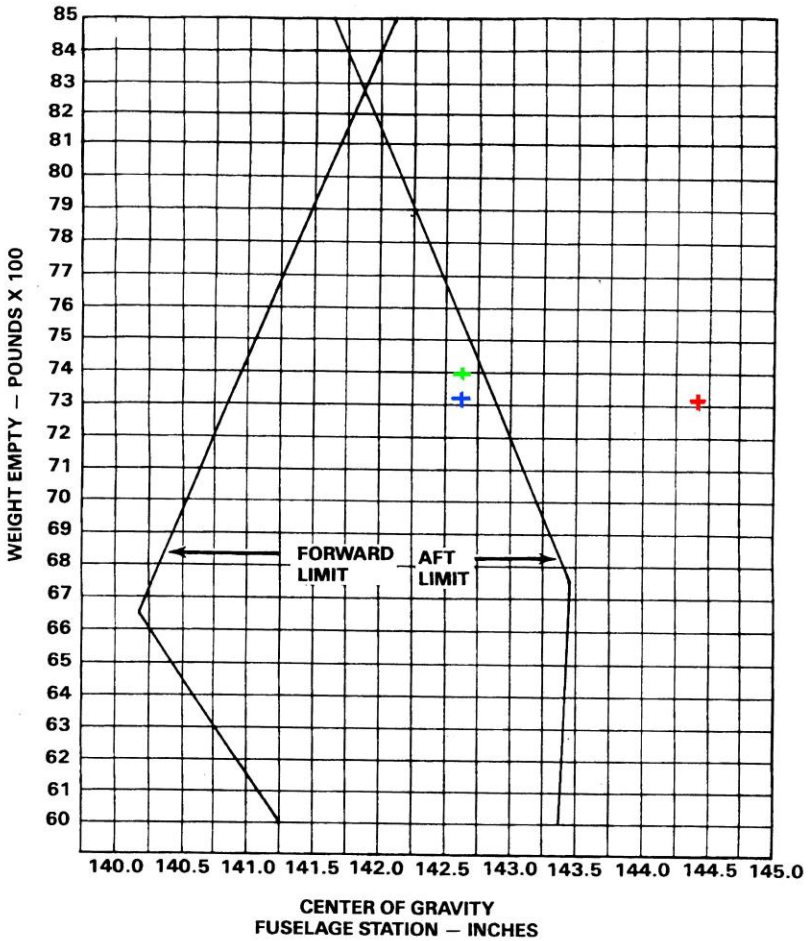

NOTE: THIS CHART TO BE USED FOR S/N 33108 AND SUBSEQUENT EXCEPT WHEN THE FOLLOWING KITS ARE INSTALLED.

1. 412-706-007-113 AUXILIARY FUEL
2. 412-706-007-114 AUXILIARY FUEL
3. 412-706-007-113 & -114 AUXILIARY FUEL

DERIVED CG
REQUIRED CG
ADJUSTED CG

CALCULATING BALLAST REQUIRED

EXAMPLE: For 412 Helicopter S/N 33108 or subsequent with no auxiliary fuel kits installed.

DETERMINE AMOUNT OF BALLAST REQUIRED AS FOLLOWS:

Derived (Total) Weight	=	7311.2 lbs.
Derived CG	=	144.42
Required (Charted) CG	=	142.65
Ballast Arm	=	-4.3 inches (Sta. -4.3) Approx.

$$\text{BALLAST} = \frac{\text{Derived Weight X (Required CG - Derived CG)}}{\text{Ballast Arm - Required CG}}$$

$$\text{BALLAST} = \frac{7311.2 \text{ X } (142.65 - 144.42)}{-4.3 - 142.65}$$

$$\text{BALLAST} = \frac{7311.2 \text{ X } (-1.77)}{-146.95} = \frac{-12940.82}{-146.95} = 88 \text{ lbs.}$$

BALLAST INSTALLED		WEIGHT	ARM	MOMENTS
2 each -015 (@ 19 lb)		38 lbs	-4.7	-178
4 each -013 (@ 8 lb)		32 lbs	-4.1	-131
2 each -011 (@ 4 lb)		16 lbs	-4.1	- 65
2 each -007 (@ 1 lb)		2 lbs	-1.8	- 4
	TOTAL:	88 lbs	-4.3	-378

	WEIGHT	ARM	MOMENTS
Derived (Total)	7311.2	144.42	1055891
Ballast Installed	88.0	-4.3	-378
EMPTY WEIGHT	7399.2	142.65	1055513

BALLAST PART NUMBERS:

212-030-173-009 = 75.5 lb. (Average)
212-030-245-015 = 19.0 lb.
212-030-245-007 = 1.0 lb.
212-030-245-009 = 2.5 lb.
212-030-245-011 = 4.0 lb.
212-030-245-013 = 8.0 lb.

FORWARD BALLAST LOCATION

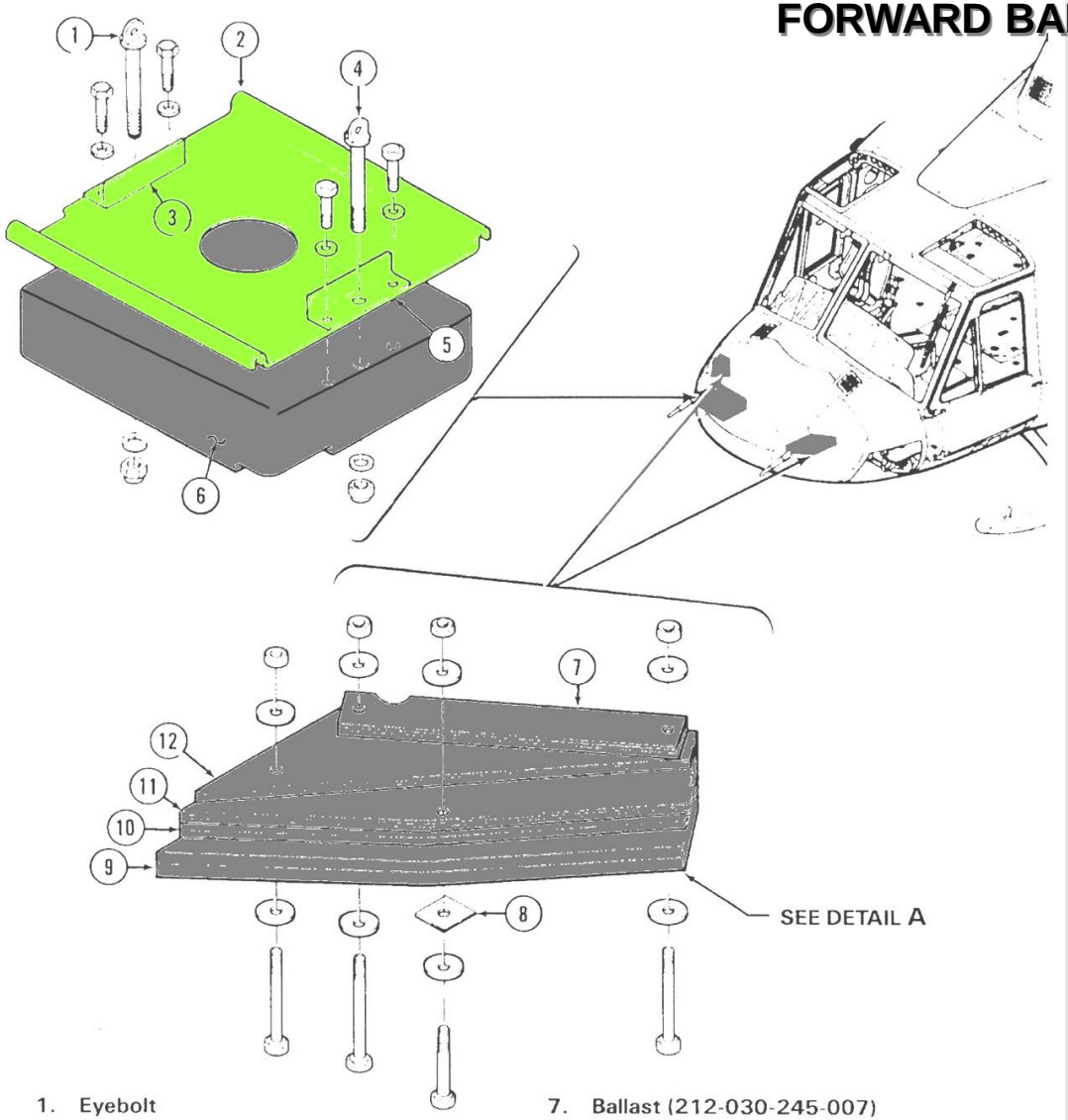

1. Eyebolt
2. Pan
3. Bracket
4. Eyebolt
5. Bracket
6. Ballast (212-030-173-009)
7. Ballast (212-030-245-007)
8. Block
9. Ballast (212-030-245-015)
10. Ballast (212-030-245-013)
11. Ballast (212-030-245-011)
12. Ballast (212-030-245-009)

FORWARD BALLAST WEIGHTS

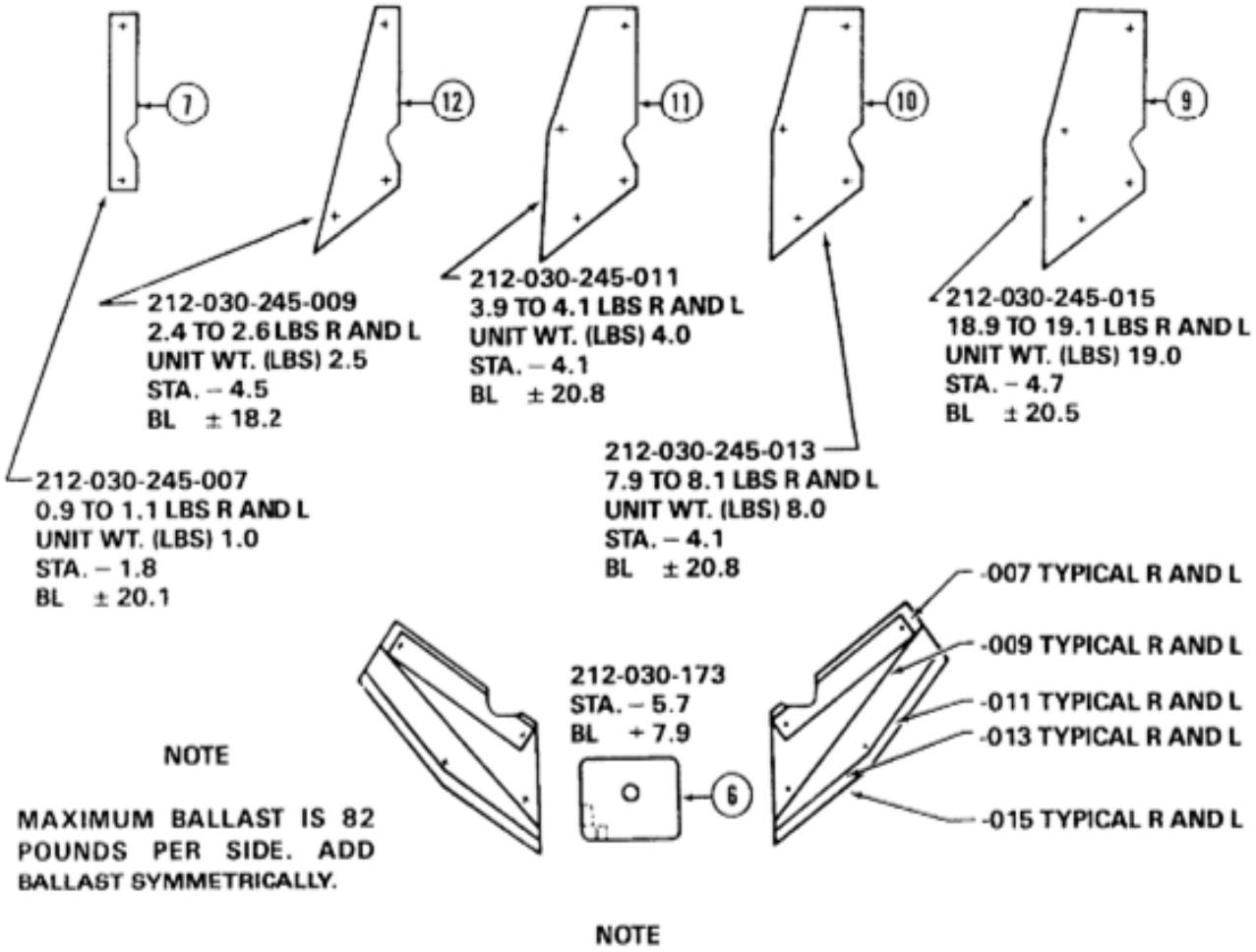

NOTE

MAXIMUM BALLAST IS 82 POUNDS PER SIDE. ADD BALLAST SYMMETRICALLY.

NOTE

ITEM 12 212-030-173-9 BALLAST NOT INCLUDED IN 164 POUND MAXIMUM WEIGHT.

ACTUAL WEIGHT IS STAMPED ON EACH 212-030-173 WEIGHT

NOTE: MAXIMUM ALLOWABLE NUMBER OF BALLAST (WEIGHTS) ARE ILLUSTRATED.

AFT BALLAST LOCATION

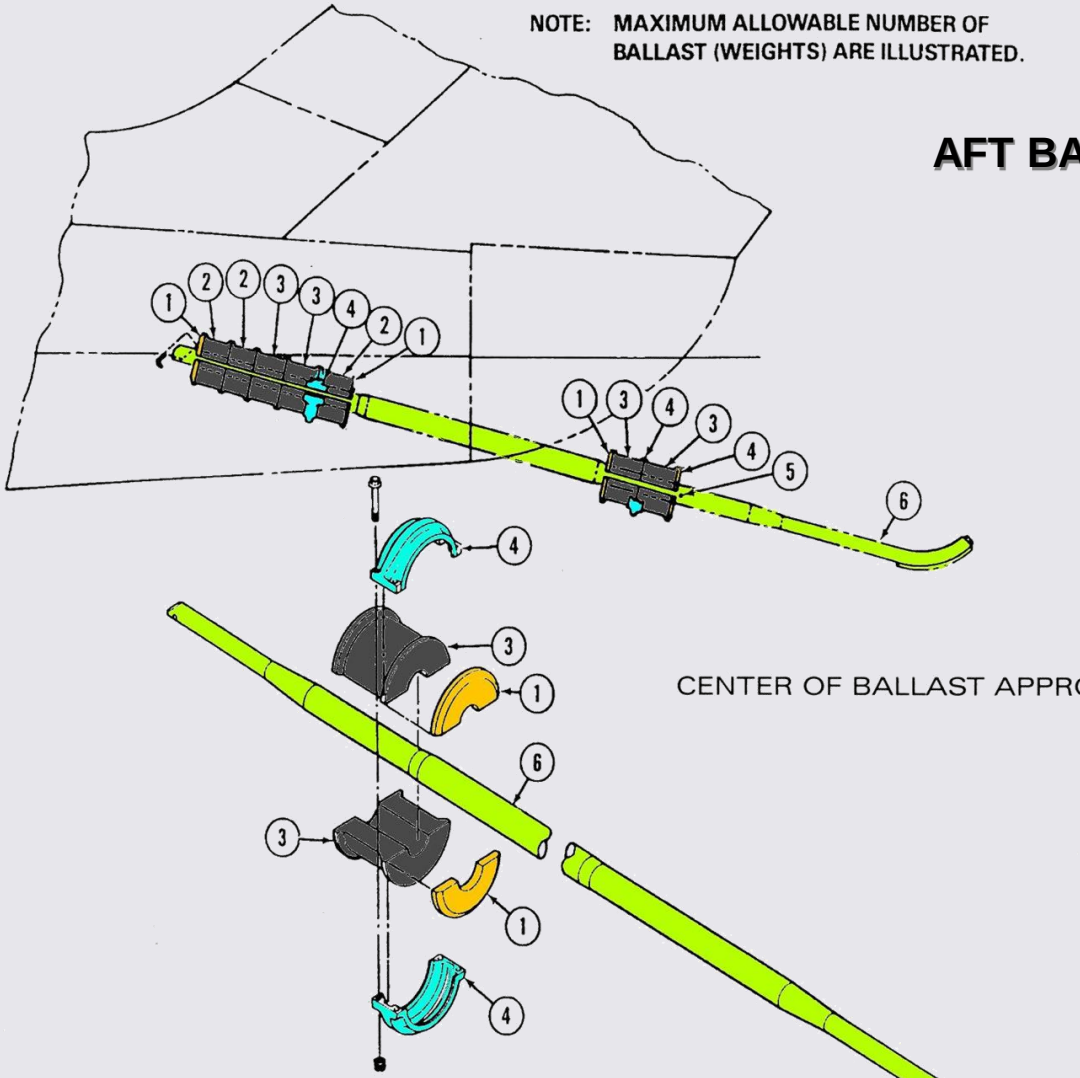

1. Washer half 204-071-566-5
2. Ballast (weight) half 204-071-566-3
3. Ballast (weight) half 204-071-566-1
4. Clamp half 204-040-811-1
5. Roll pin
6. Tail skid

The helicopter is chartered to transport nine passengers and 180 pounds of baggage on a trip that will require approximately 260 U.S. gallons of JP-4 fuel one way. The helicopter will be refueled and the 190 pound pilot will return alone. Determine extreme CG condition for both flights.

		LONGITUDINAL			LATERAL
OUTBOUND FLIGHT	WEIGHT	CG	MOMENT	CG	MOMENT
Empty Weight	7399		1055513		+ 2294
+Oil	25		4146	0	
+Pilot	190		8930	+22.0	+4180
+Passengers (5 man seat)	850		99450	0	
+Passengers (4 man seat)	680		59160	0	
+Baggage	180		46980	0	
Base Operating Weight + Payload	9324		1274179		+6474
+Critical Fuel (330 Gal.)	2145		324753		- 815
TAKEOFF CONDITION	11469	139.4	1598932	+0.5	+5659
Basic Operating Weight + Payload	9324		1274179		+6474
+Critical Forward Fuel (58.3 Gal)	379		53022		0
MOST FORWARD CONDITION	9703	136.8	1327201	+0.7	+6474
Basic Operating Weight + Payload	9324		1274179		+6474
+Landing Fuel (70 Gal)	455	137.1	66430		-27
LANDING CONDITION	9779	137.1	1340609	+0.7	+6447
RETURN FLIGHT					
Weight empty	7399		1055513		+2294
+Oil	25		4146	0	
+Pilot	190		8930	+22.0	+ 180
Basic Operating Weight + Payload	7614		1068589		+6474
+Takeoff Fuel (330 Gal)	2145		324753		-815
TAKEOFF CONDITION	9759	142.8	1393342	+0.8	+5659
Basic Operating Weight + Payload	7614		1068589		+6474
+Critical Forward Fuel (58.3 Gal)	379		53022	0	
MOST FORWARD CONDITION	7993	140.3	1121611	+0.8	+6474
Basic Operating Weight + Payload	7614		1068589		+6474
+Landing Fuel (70 Gal)	455		66430		-27
LANDING CONDITION	8069	140.7	1135019	+0.8	+6447

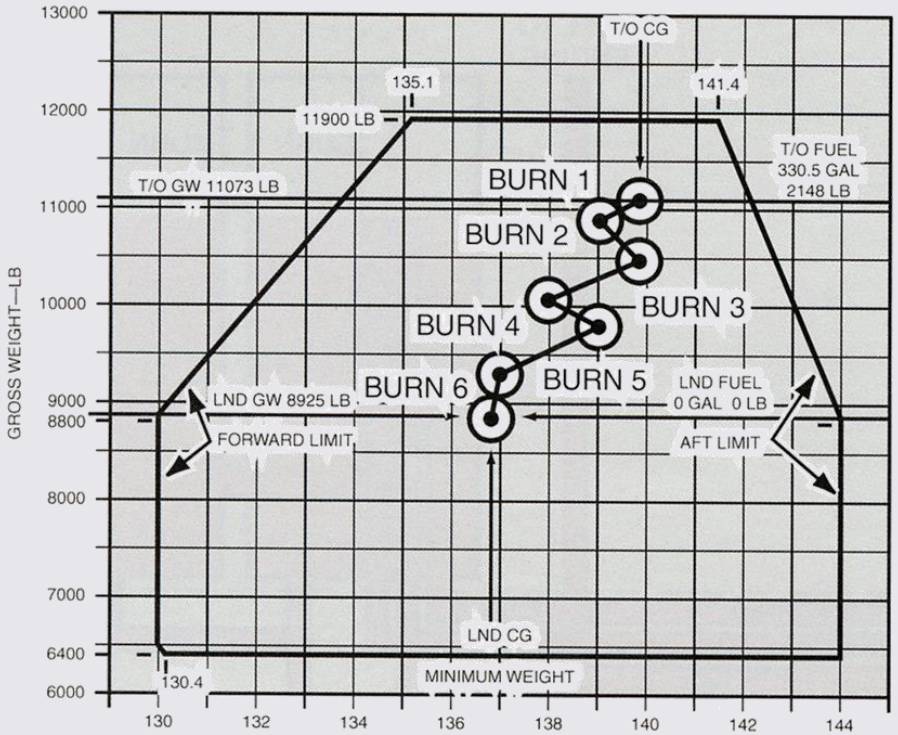

FUEL WEIGHT @ 6.49 PER GALLON

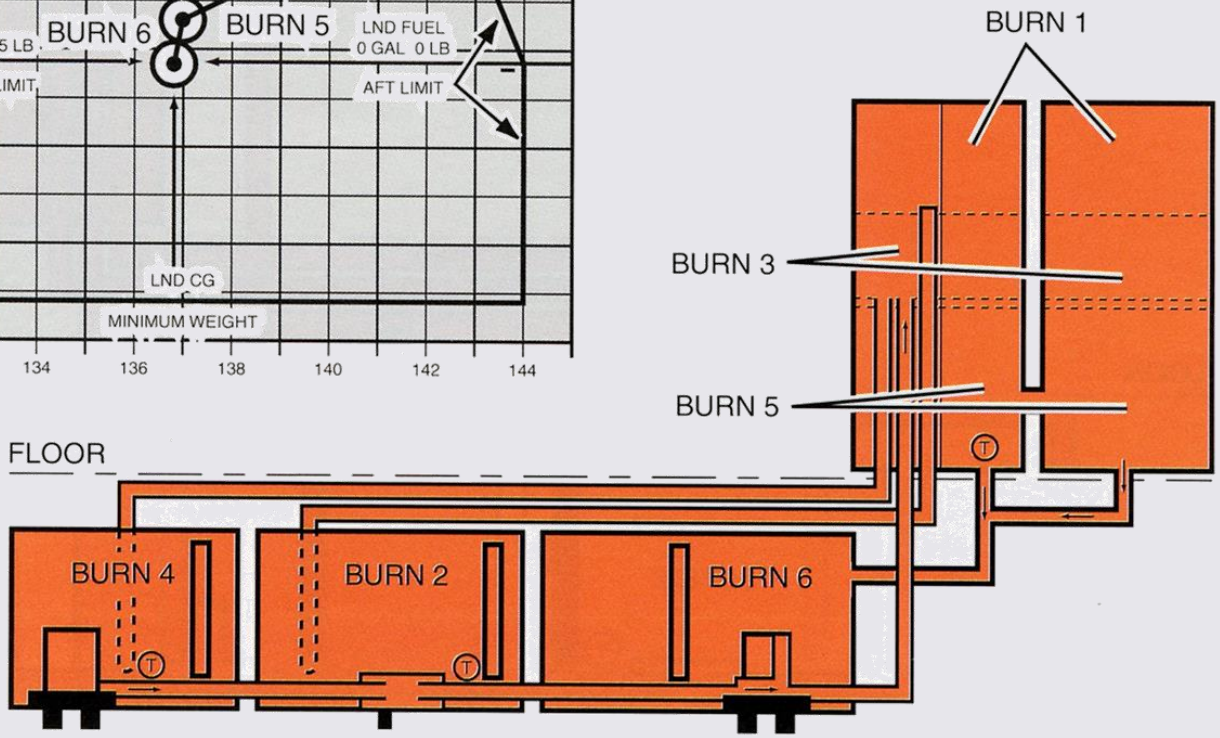

Fuel Burn Sequence

412 REVIEW
WEIGHT AND BALANCE

1. The reference datum line is fuselage station ZERO and is ___20”___ aft of the nose of the helicopter. (Standard nose)

2. Station numbers are used as reference for the longitudinal axis, ___BUTTOCK___lines for the lateral axis and ___WATER___ lines for the vertical axis.

3. If empty weight C.G. is forward of the forward limit, ___BALLAST___ must be removed from the nose or added to the aft location.

4. Leveling of the 412 may be accomplished with a ___PLUMB BOB___ placed over the leveling plate located on the left side cabin floor.

5. Ballast in the nose area is limited to ___82___ pounds on either side of the upper shelf with a total ballast of ___164___ pounds.

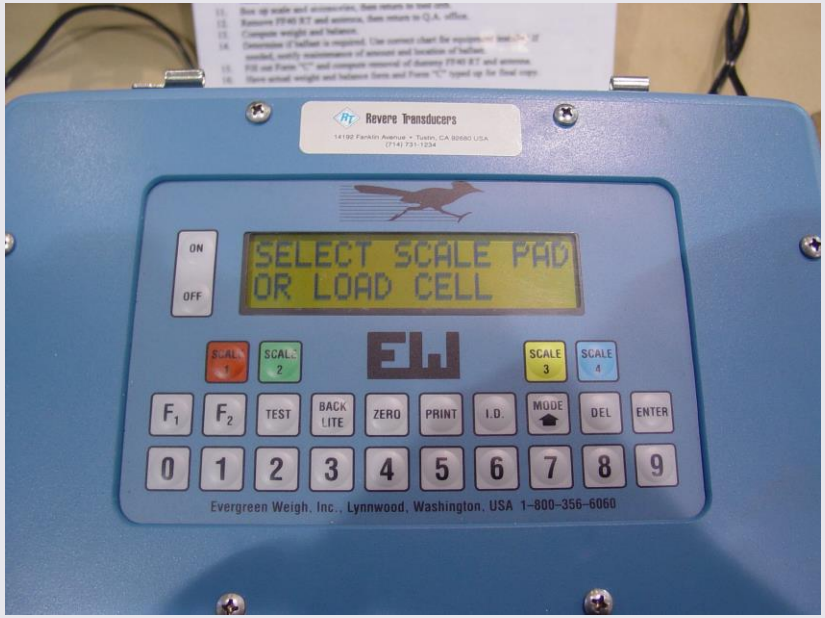

WEIGHT AND BALANCE

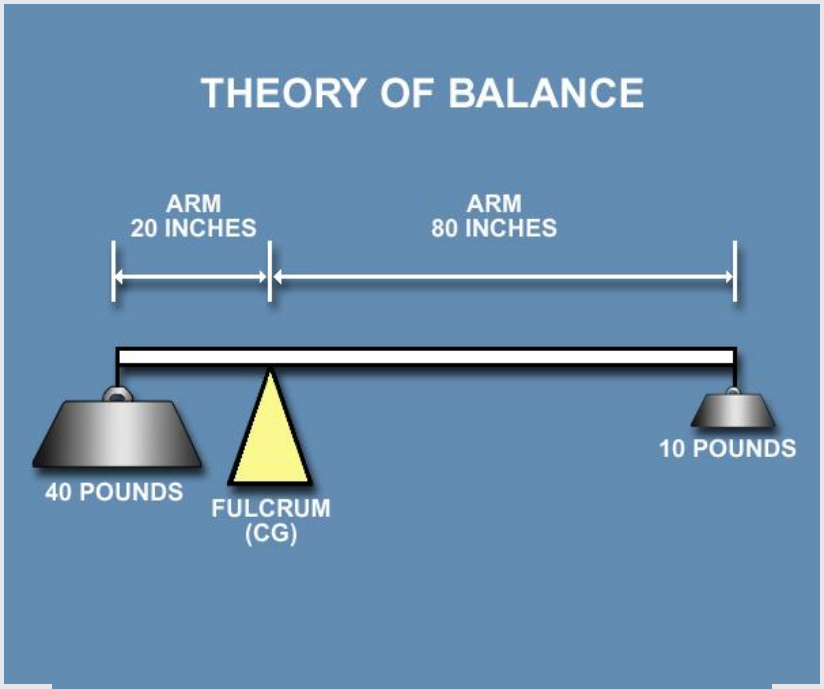
THEORY OF BALANCE
ARM
20 INCHES
ARM
80 INCHES
40 POUNDS
FULCRUM
(CG)
10 POUNDS

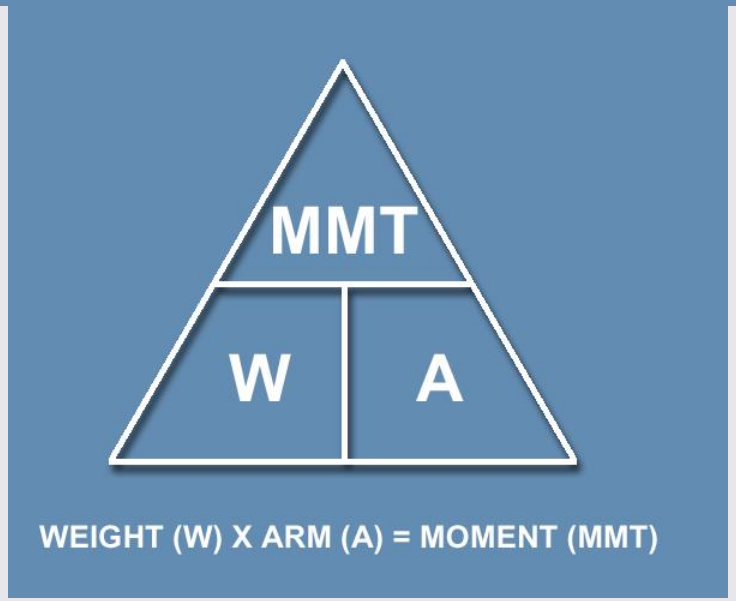
MMT
W
A
WEIGHT (W) X ARM (A) = MOMENT (MMT)