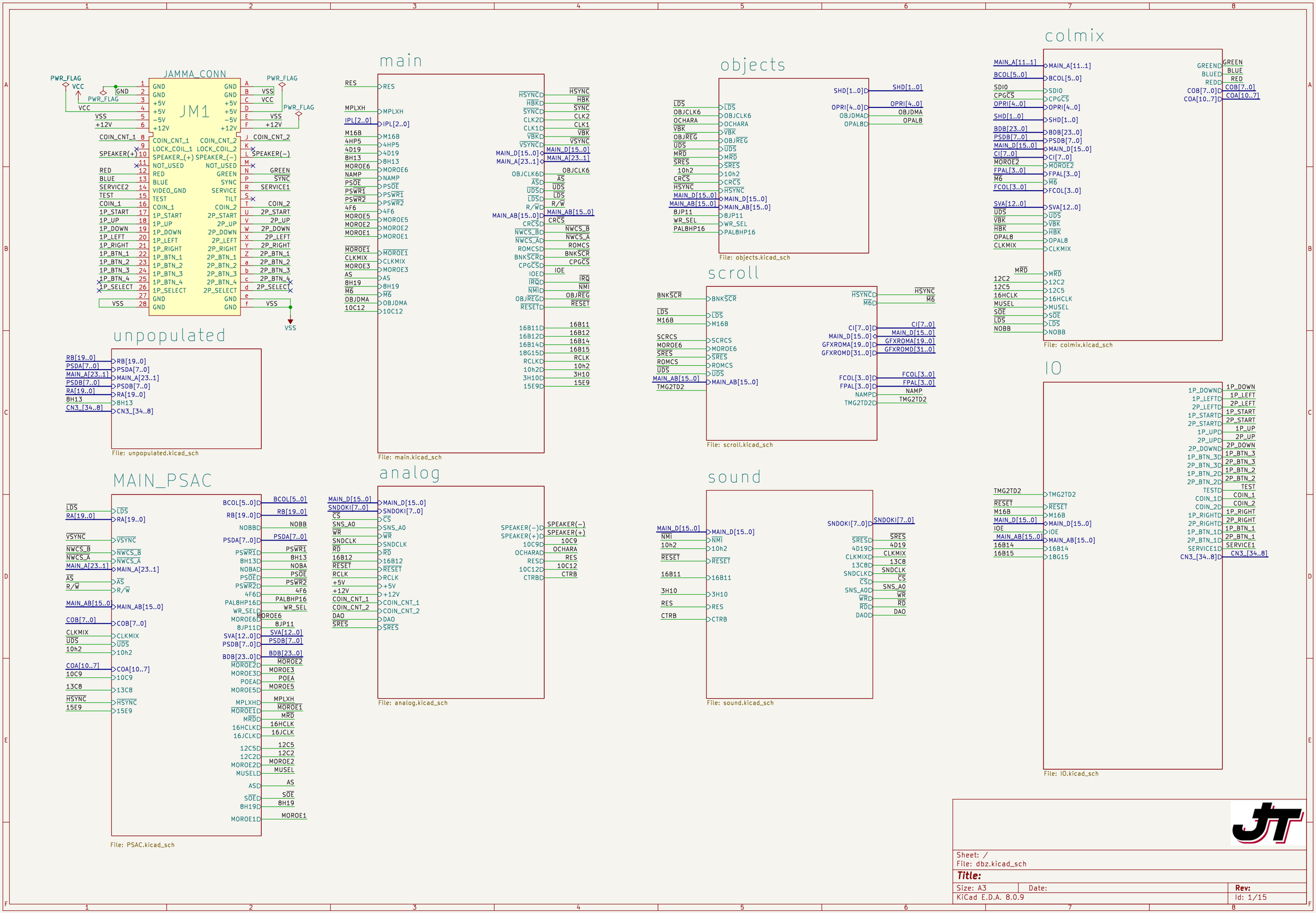
JAMMA_CONN
JM1
PWR_FLAG
VCC
GND
VSS
+12V
COIN_CNT_1
SPEAKER(+)
RED
BLUE
SERVICE2
TEST
COIN_1
1P_START
1P_UP
1P_DOWN
1P_LEFT
1P_RIGHT
1P_BTN_1
1P_BTN_2
1P_BTN_3
1P_BTN_4
1P_SELECT
LOCK_COIL_1
SPEAKER_(+)
NOT_USED
VIDEO_GND
TILT
COIN_CNT_2
LOCK_COIL_2
SPEAKER_(−)
GREEN
SYNC
SERVICE1
COIN_2
2P_START
2P_UP
2P_DOWN
2P_LEFT
2P_RIGHT
2P_BTN_1
2P_BTN_2
2P_BTN_3
2P_BTN_4
2P_SELECT
main
File: main.kicad_sch
objects
File: objects.kicad_sch
colmix
File: colmix.kicad_sch
unpopulated
File: unpopulated.kicad_sch
scroll
File: scroll.kicad_sch
IO
File: IO.kicad_sch
MAIN_PSAC
File: PSAC.kicad_sch
analog
File: analog.kicad_sch
sound
File: sound.kicad_sch
Sheet: /
File: dbz.kicad_sch
Title:
Size: A3
Date:
Rev:
KiCad E.D.A. 8.0.9
Id: 1/15

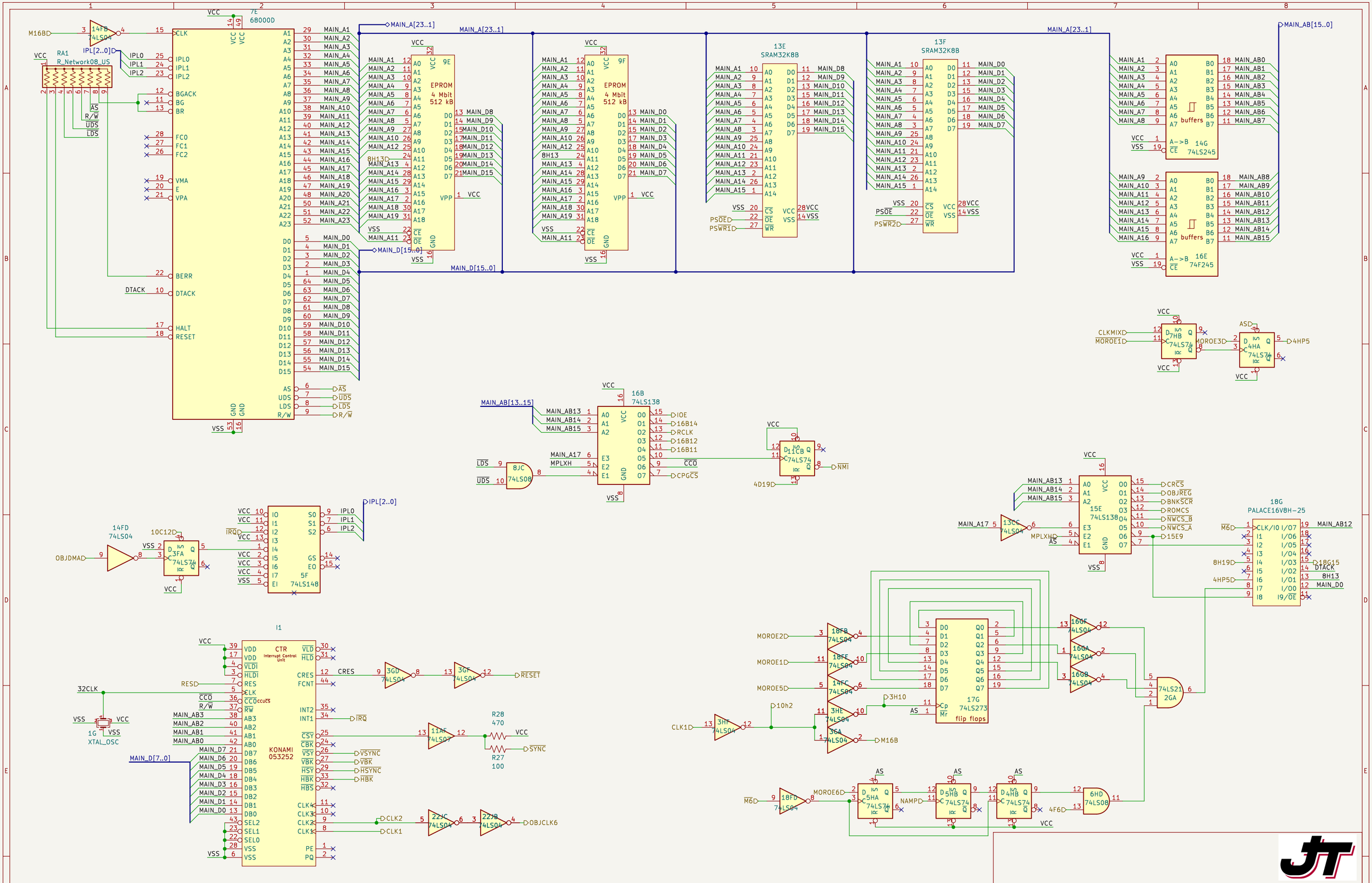
7E
68000D
RA1
R_Network08_US
14FB
74LS04
M16B
IPL[2..0]
MAIN_A[23..1]
MAIN_D[15..0]
9E
EPROM
4 Mbit
512 kB
8H13
9F
13E
SRAM32K8B
13F
SRAM32K8B
buffers
14G
74LS245
16E
74F245
MAIN_AB[15..0]
CLKMIX
MOROE1
MOROE3
4HP5
16B
74LS138
MAIN_AB[13..15]
IOE
16B14
RCLK
16B12
16B11
CCO
CPGCS
NMI
4D19
14FD
74LS04
OBJDMA
10C12
IRQ
5F
74LS148
13CC
74LS04
15E
74LS138
CRCS
OBJREG
BNKSCR
ROMCS
NWCS_B
NWCS_A
15E9
18G
PALACE16V8H-25
18G15
DTACK
8H13
MAIN_D0
I1
KONAMI
053252
CTR
Interrupt Control Unit
CRES
RESET
IRQ
VSYNC
VBK
HSYNC
HBK
CLK2
CLK1
OBJCLK6
R28
470
R27
100
SYNC
32CLK
1G
XTAL_OSC
MAIN_D[7..0]
17G
74LS273
flip flops
MOROE2
MOROE1
MOROE5
CLK1
10h2
3H10
M16B
MOROE6
NAMP
4F6
6HD
74LS08
74LS21
2GA
Sheet: /main/
File: main.kicad_sch
Title:
Size: A3
Date:
Rev:
KiCad E.D.A. 8.0.9
Id: 2/15

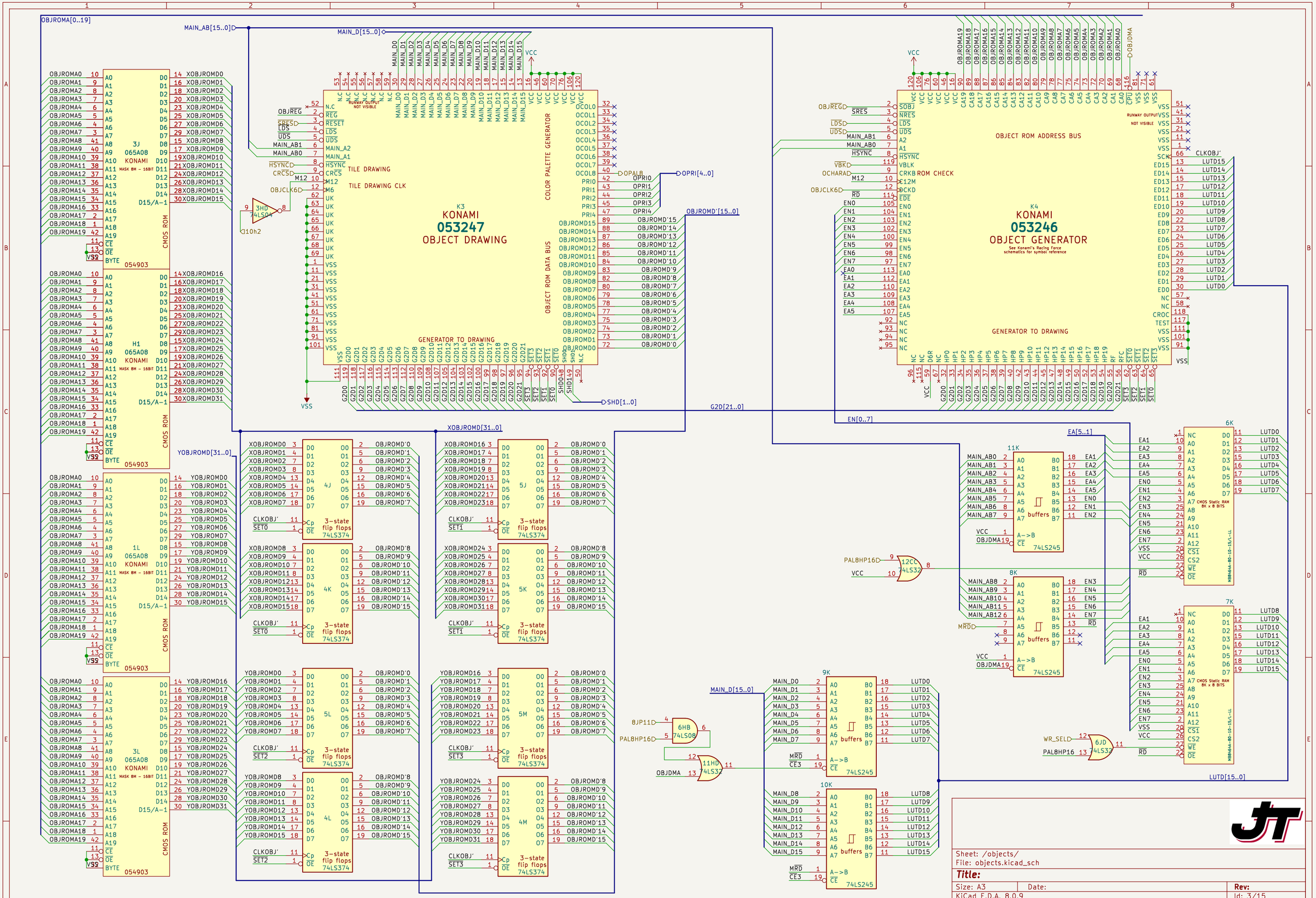

Sheet: /objects/
File: objects.kicad_sch

Title:

Size: A3 | Date: | Rev:

KiCad E.D.A. 8.0.9 | Id: 3/15

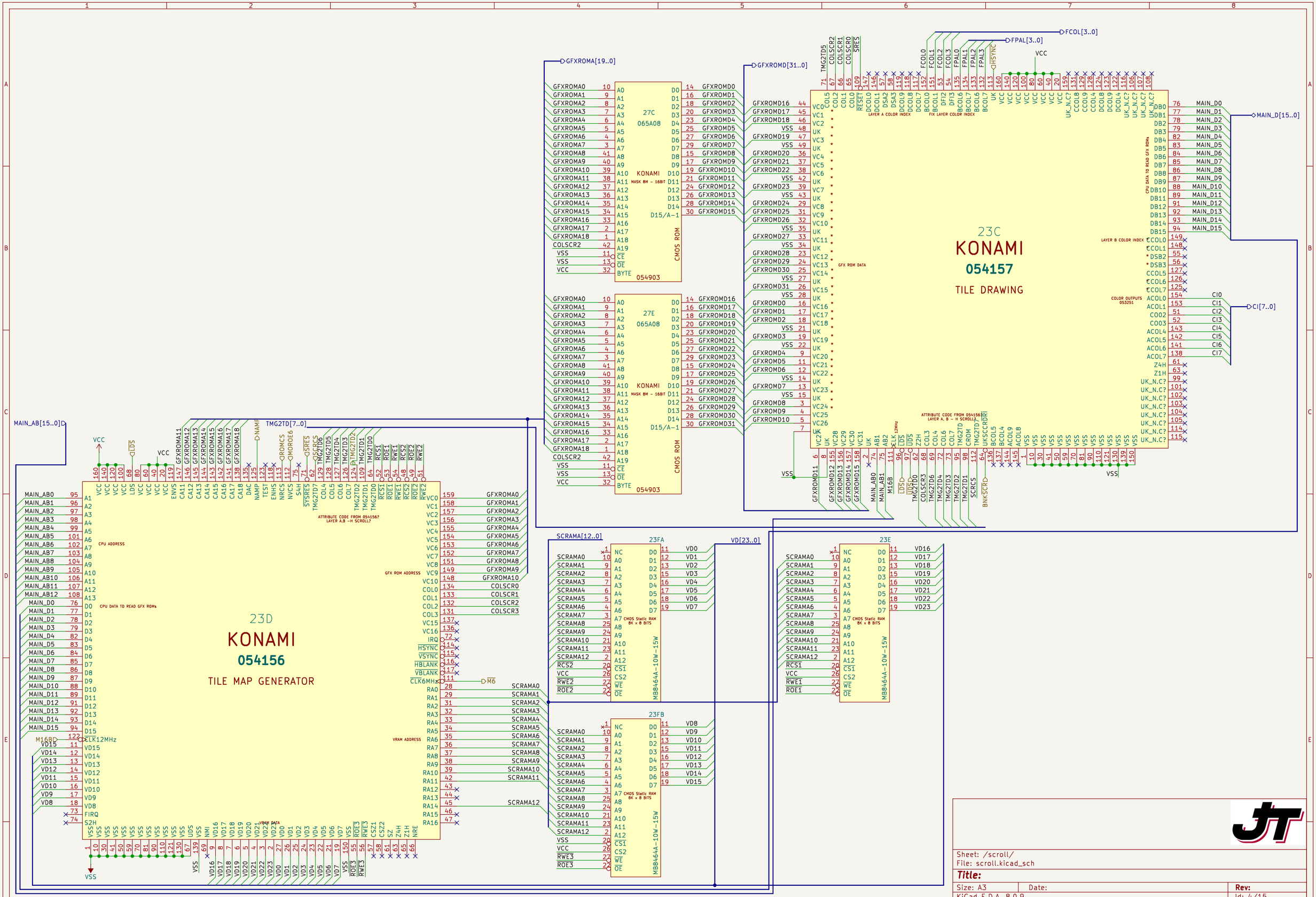

Sheet: /scroll/
File: scroll.kicad_sch

Title:

Size: A3	Date:	Rev:
KiCad E.D.A. 8.0.9		Id: 4/15

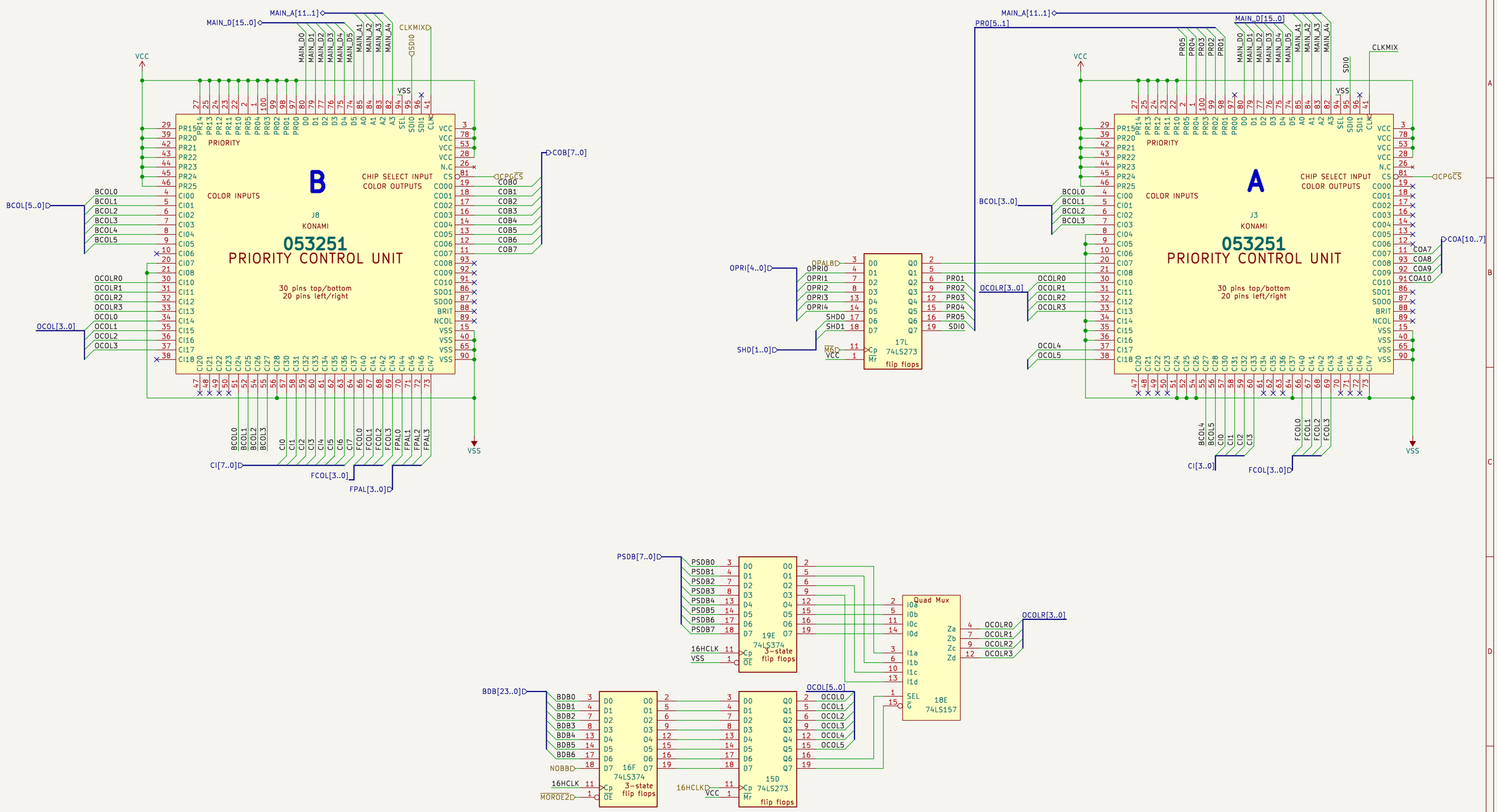

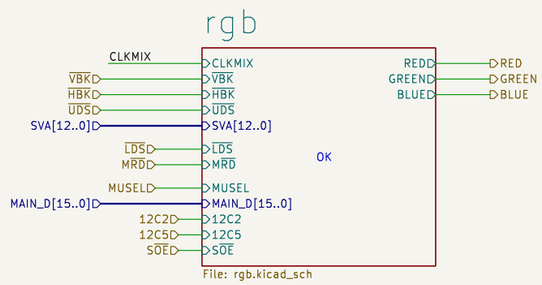

Sheet: /colmix/
File: colmix.kicad_sch

Title:

Size: A3	Date:	Rev:
KiCad E.D.A. 8.0.9		Id: 5/15

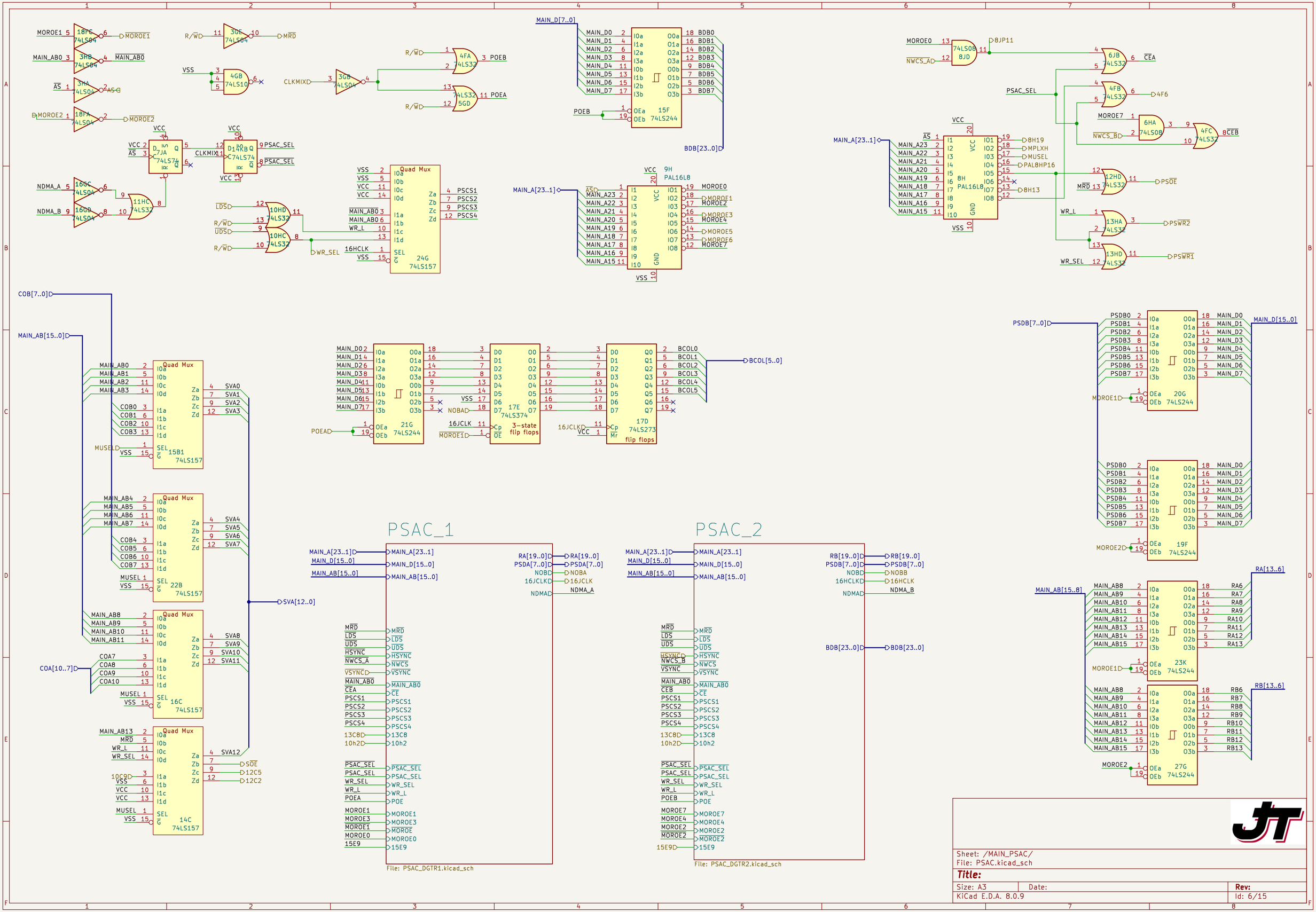
PSAC_1
PSAC_2
Quad Mux
74LS157
74LS244
74LS374
74LS273
74LS32
74LS04
74LS10
74LS08
74LS74
PAL16L8
MAIN_D[7..0]
MAIN_D[15..0]
BDB[23..0]
BCOL[5..0]
COB[7..0]
MAIN_AB[15..0]
COA[10..7]
SVA[12..0]
PSDB[7..0]
RA[13..6]
RB[13..6]
File: PSAC_DGTR1.kicad_sch
File: PSAC_DGTR2.kicad_sch
Sheet: /MAIN_PSAC/
File: PSAC.kicad_sch
Title:
Size: A3
Date:
Rev:
KiCad E.D.A. 8.0.9
Id: 6/15

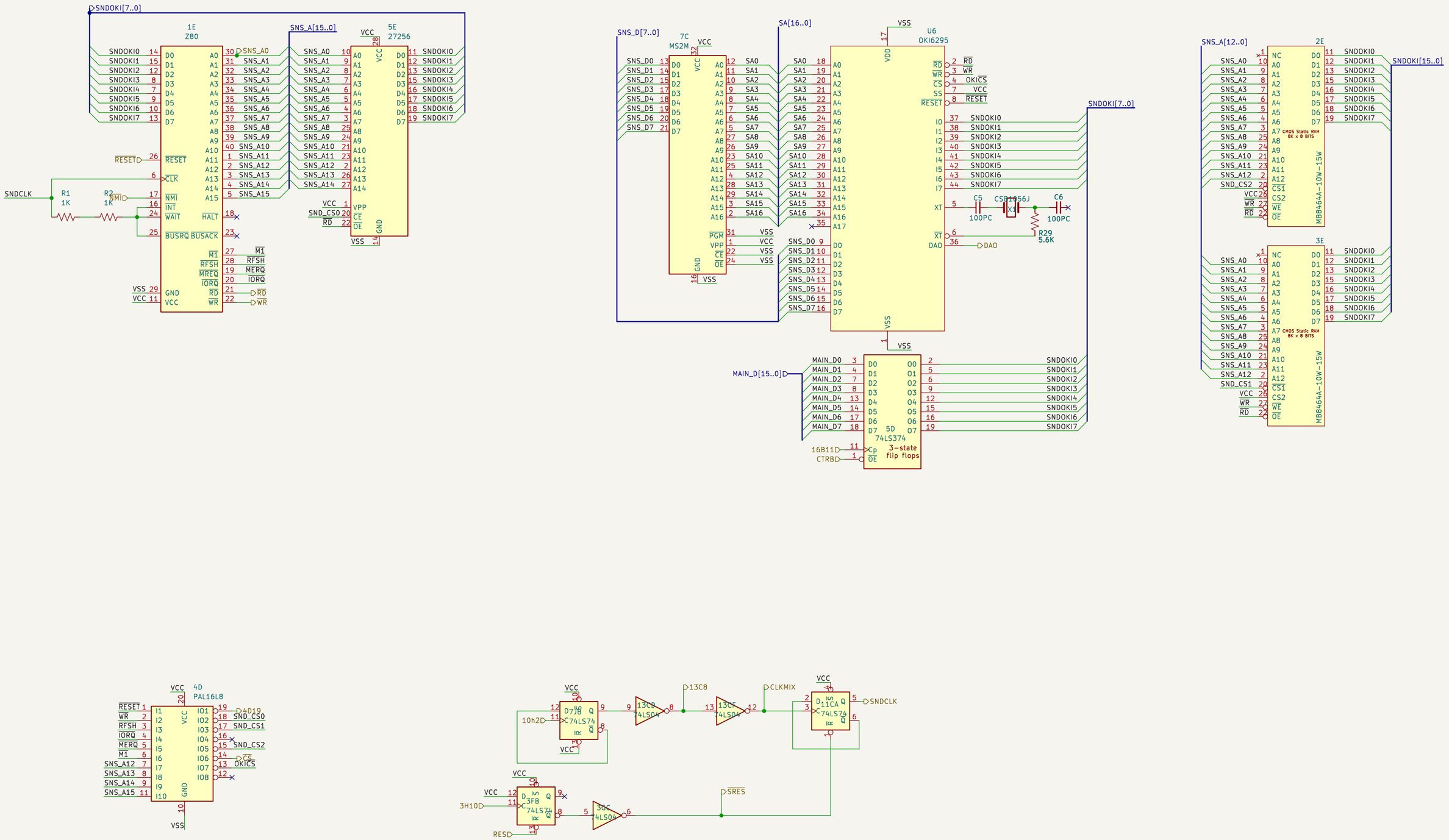

Sheet: /sound/
File: sound.kicad_sch

Title:

Size: A3	Date:	Rev:
KiCad E.D.A. 8.0.9		Id: 7/15

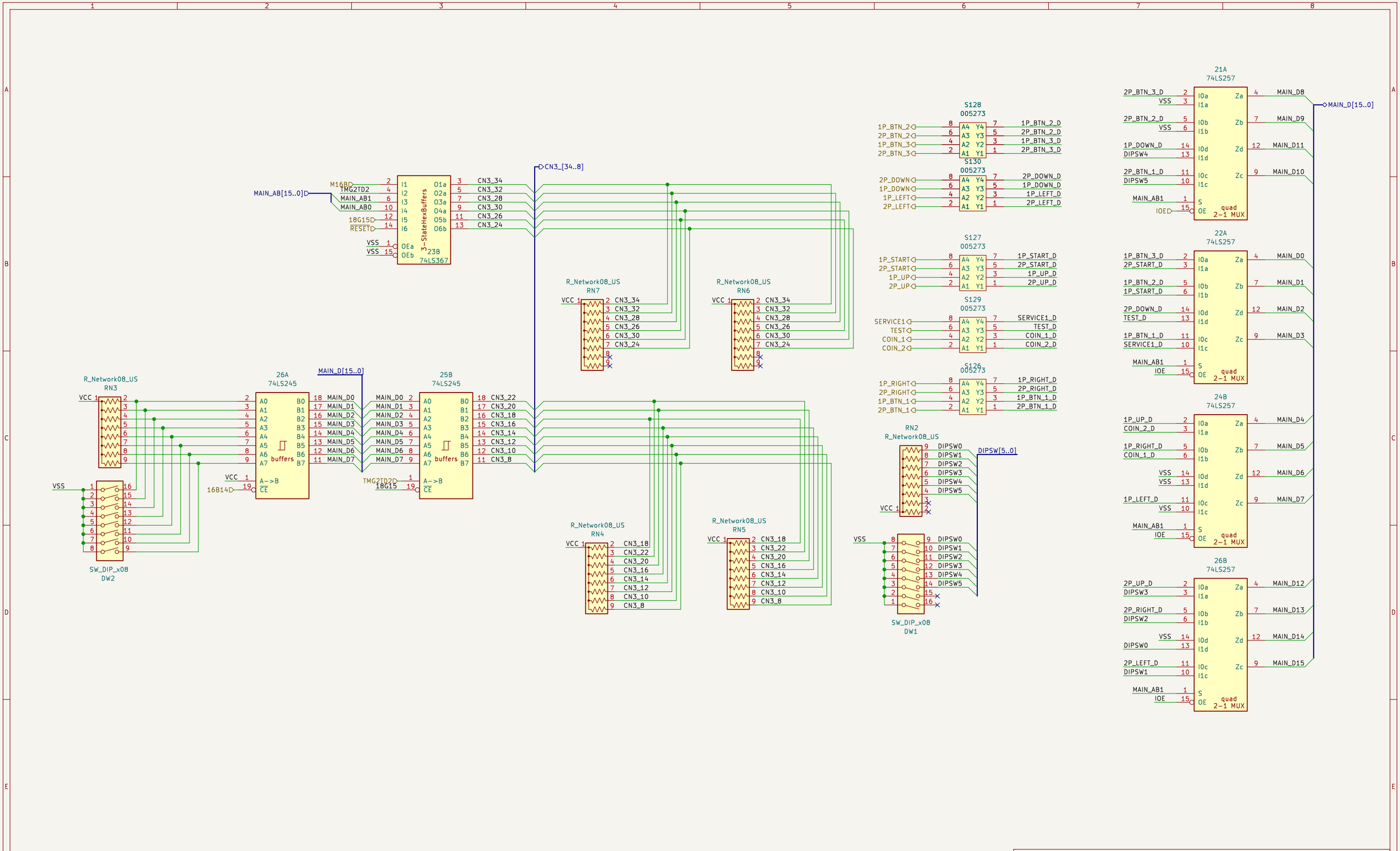

Sheet: /IO/
File: IO.kicad_sch

Title:

Size: A3	Date:	Rev:
KiCad E.D.A. 8.0.9		Id: 8/15

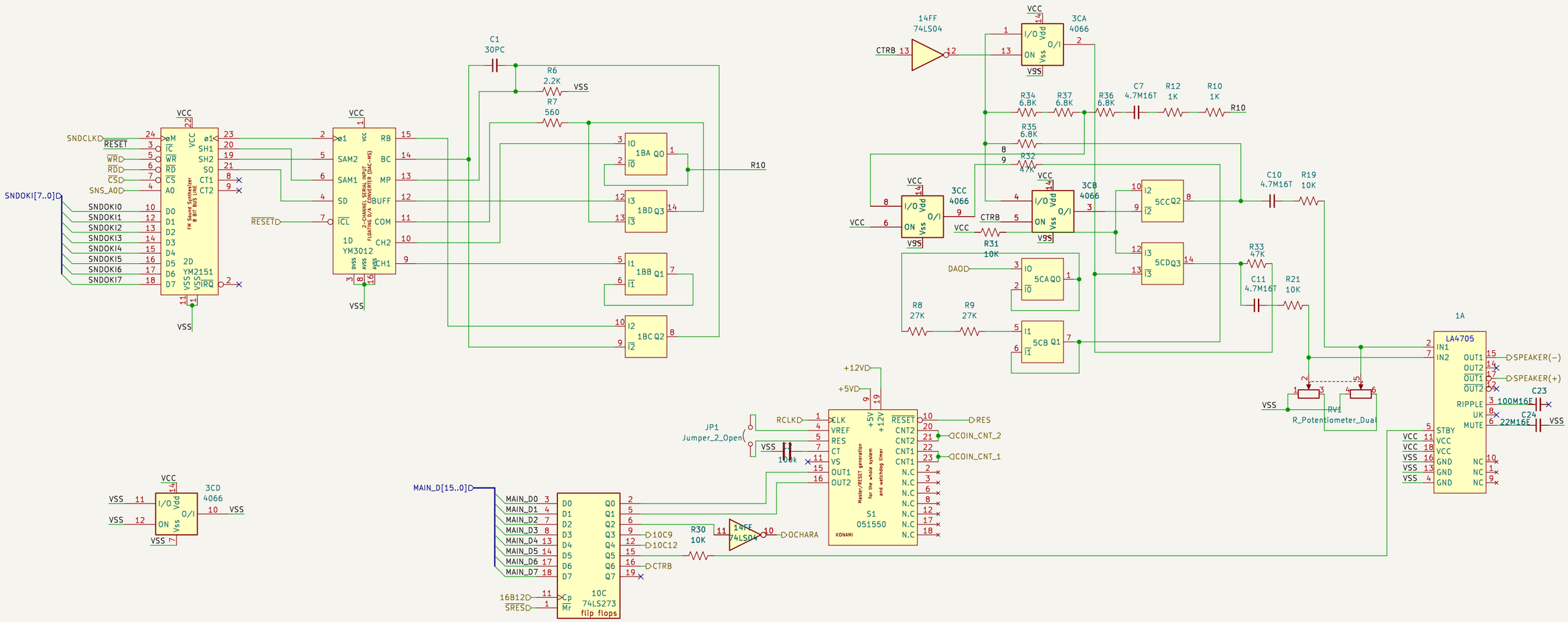

Banpresto/Konami

Sheet: /analog/
File: analog.kicad_sch

Title: DBZ

Size: A3	Date:	Rev:
KiCad E.D.A. 8.0.9		Id: 9/15

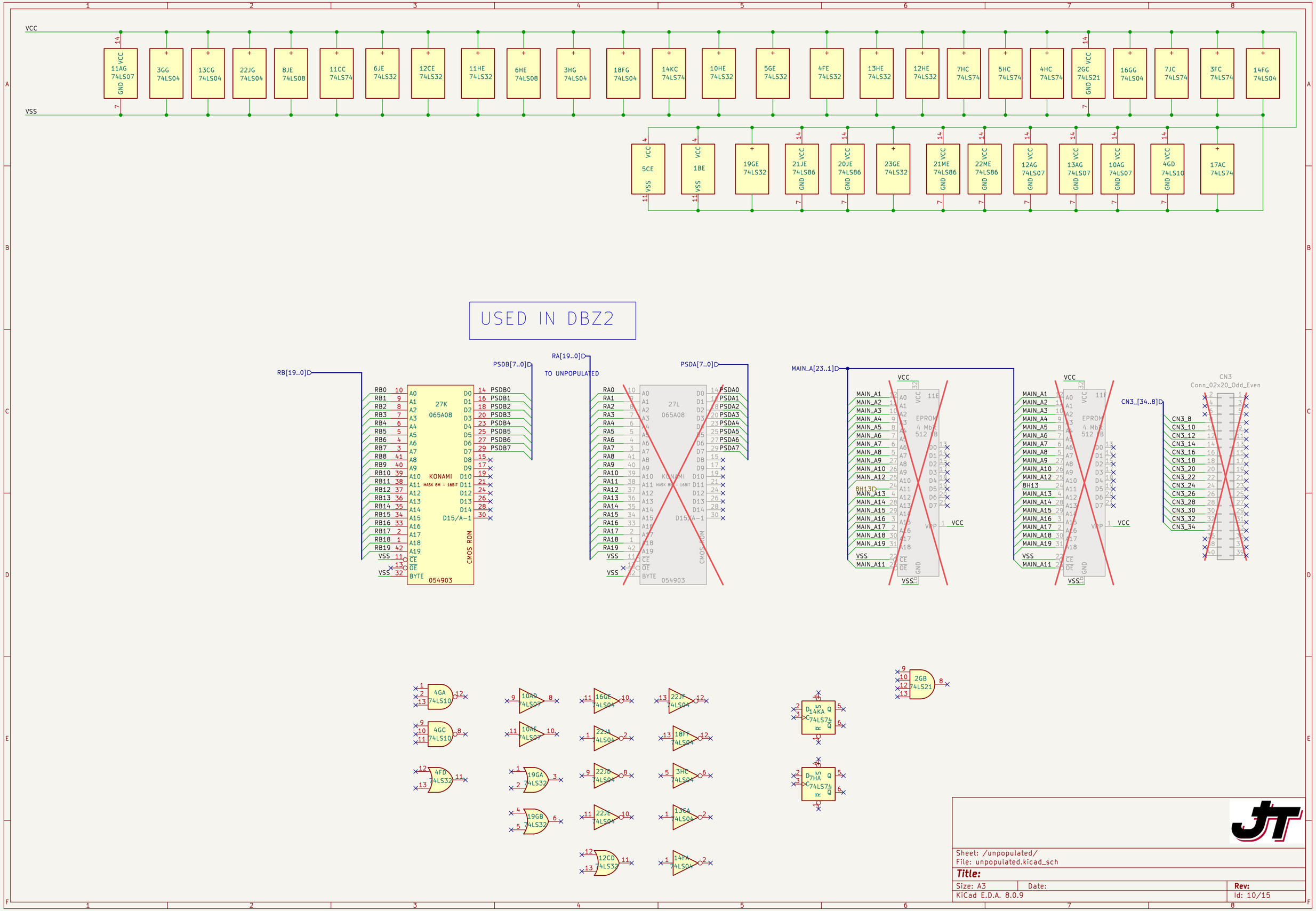

Sheet: /unpopulated/
File: unpopulated.kicad_sch

Title:

Size: A3	Date:	Rev:
KiCad E.D.A. 8.0.9		Id: 10/15

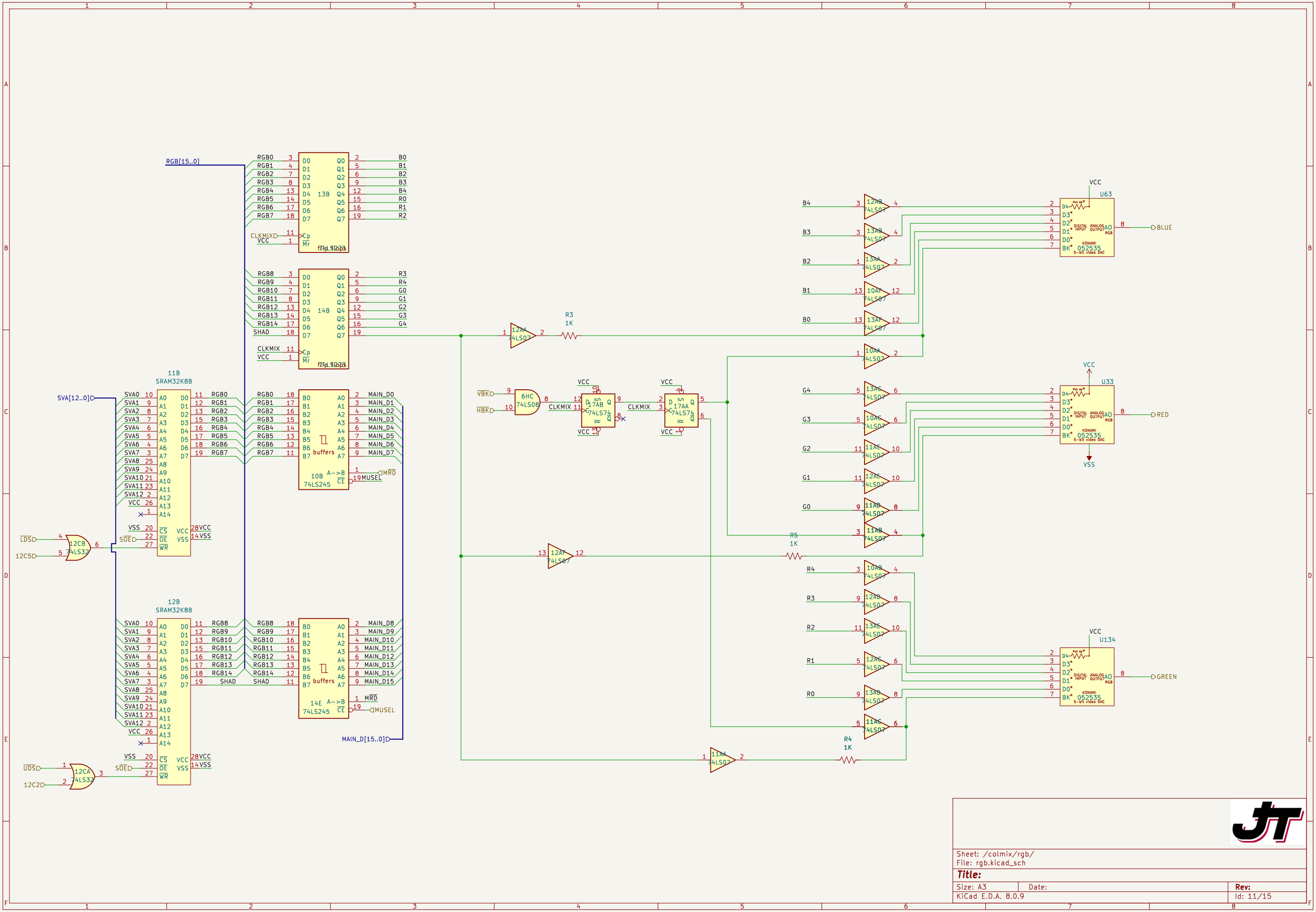

Sheet: /colmix/rgb/
File: rgb.kicad_sch

Title:

Size: A3	Date:	Rev:
KiCad E.D.A. 8.0.9		Id: 11/15

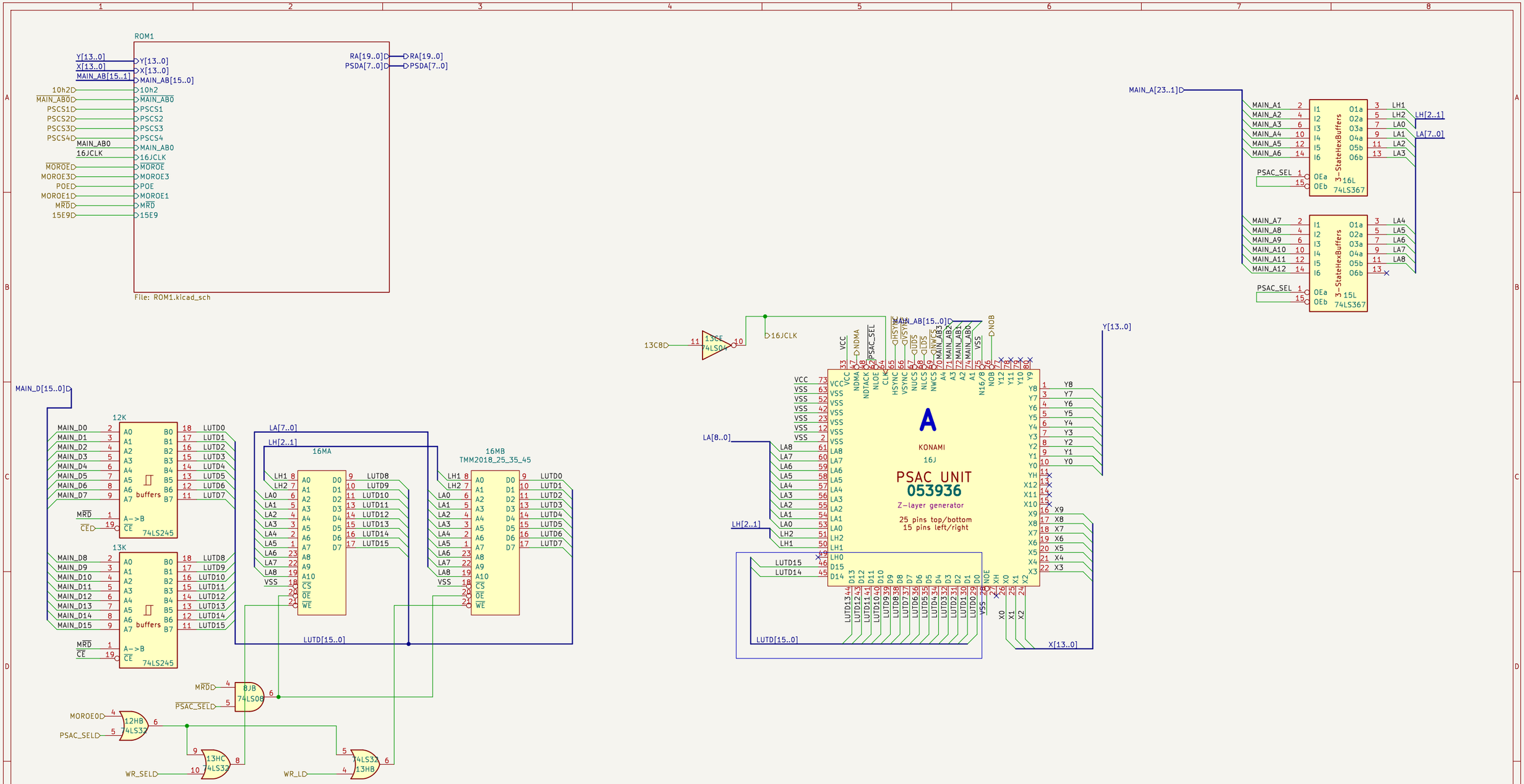

Sheet: /MAIN_PSAC/PSAC_1/
File: PSAC_DGTR1.kicad_sch

Title:

Size: A3	Date:	Rev:
KiCad E.D.A. 8.0.9		Id: 12/15

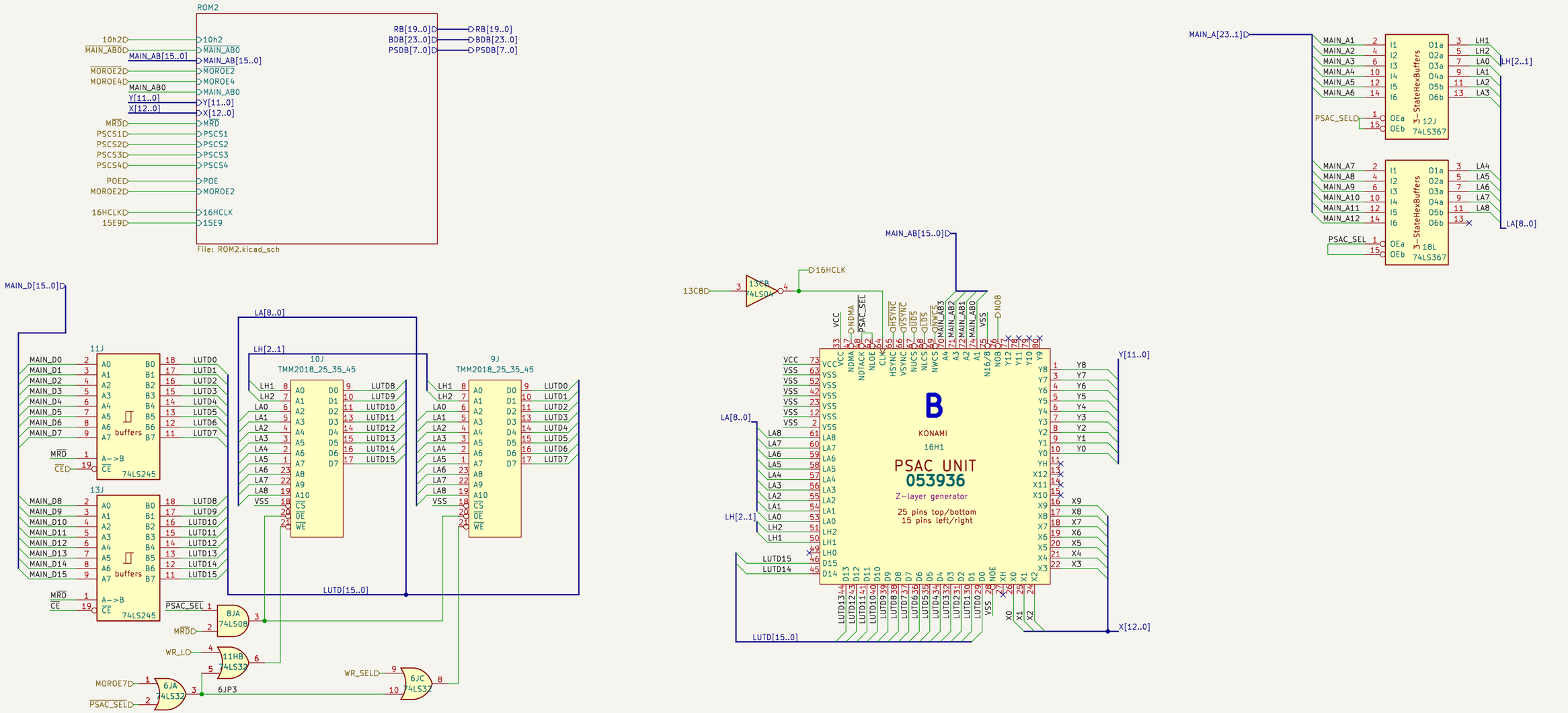

Sheet: /MAIN_PSAC/PSAC_2/
File: PSAC_DGTR2.kicad_sch

Title:

Size: A3	Date:	Rev:
KiCad E.D.A. 8.0.9		Id: 13/15

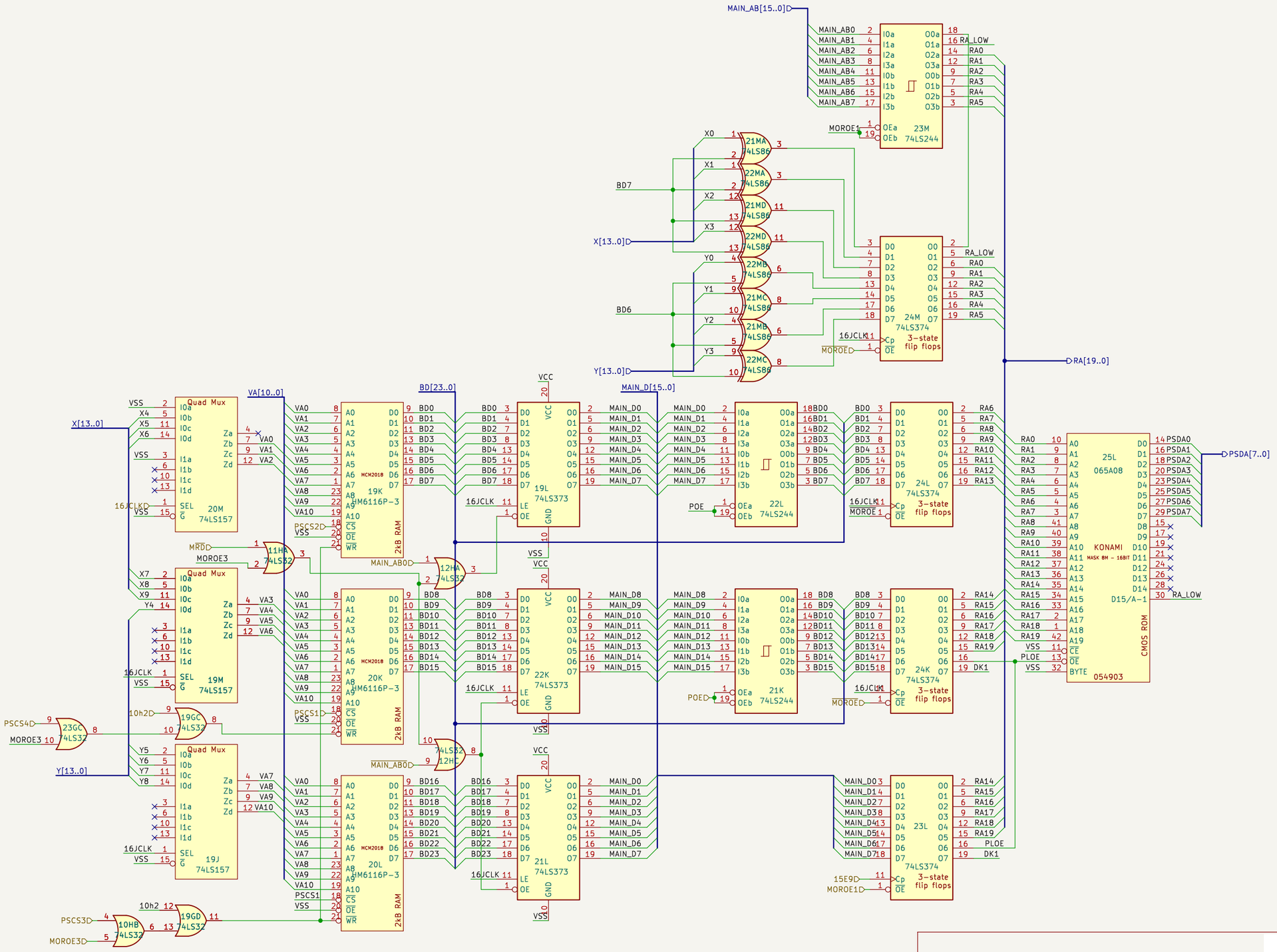

Sheet: /MAIN_PSAC/PSAC_1/ROM1/
File: ROM1.kicad_sch

Title:

Size: A3	Date:	Rev:
KiCad E.D.A. 8.0.9		Id: 14/15

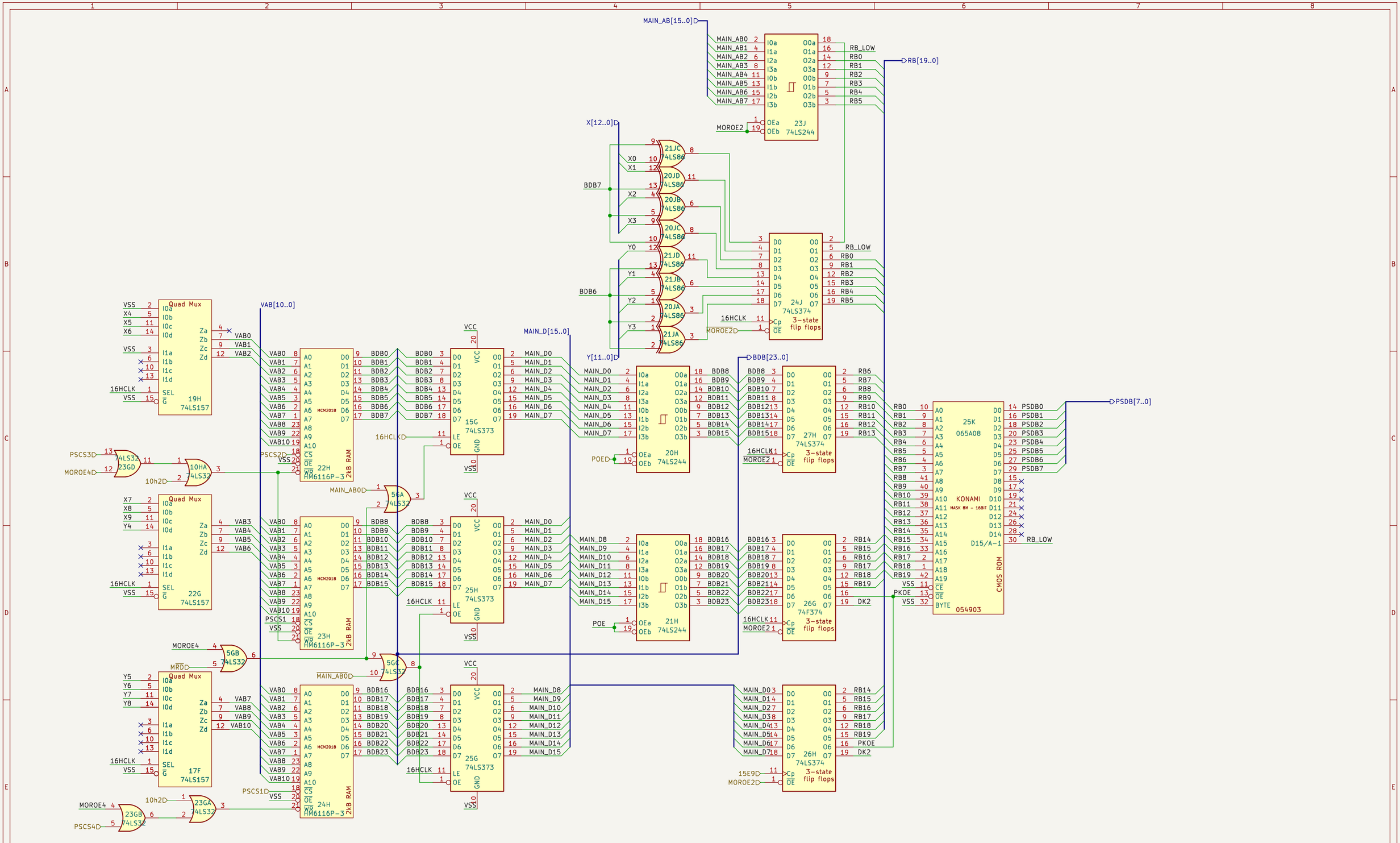

Sheet: /MAIN_PSAC/PSAC_2/ROM2/
File: ROM2.kicad_sch

Title:

Size: A3	Date:	Rev:
KiCad E.D.A. 8.0.9		Id: 15/15