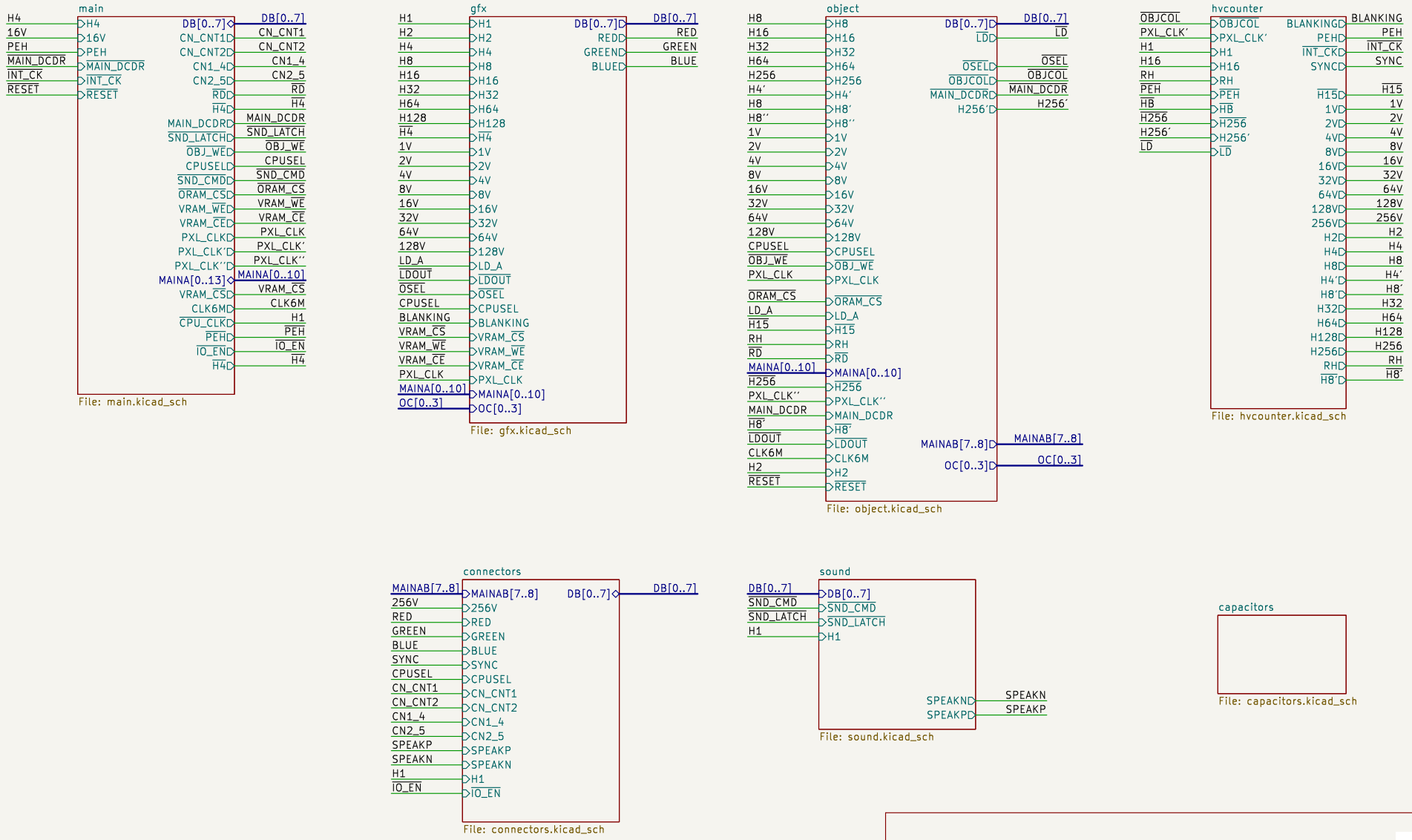

JOTEGO
Ping Pong
JOTEGO

Sheet: /
File: pingpong.kicad_sch

GX555

Title: Ping Pong

Size: A4	Date: 2022-03-28	**Rev: J. Tejada**
KiCad E.D.A. 8.0.9		Id: 1/11

MAIN PROGRAM ROM

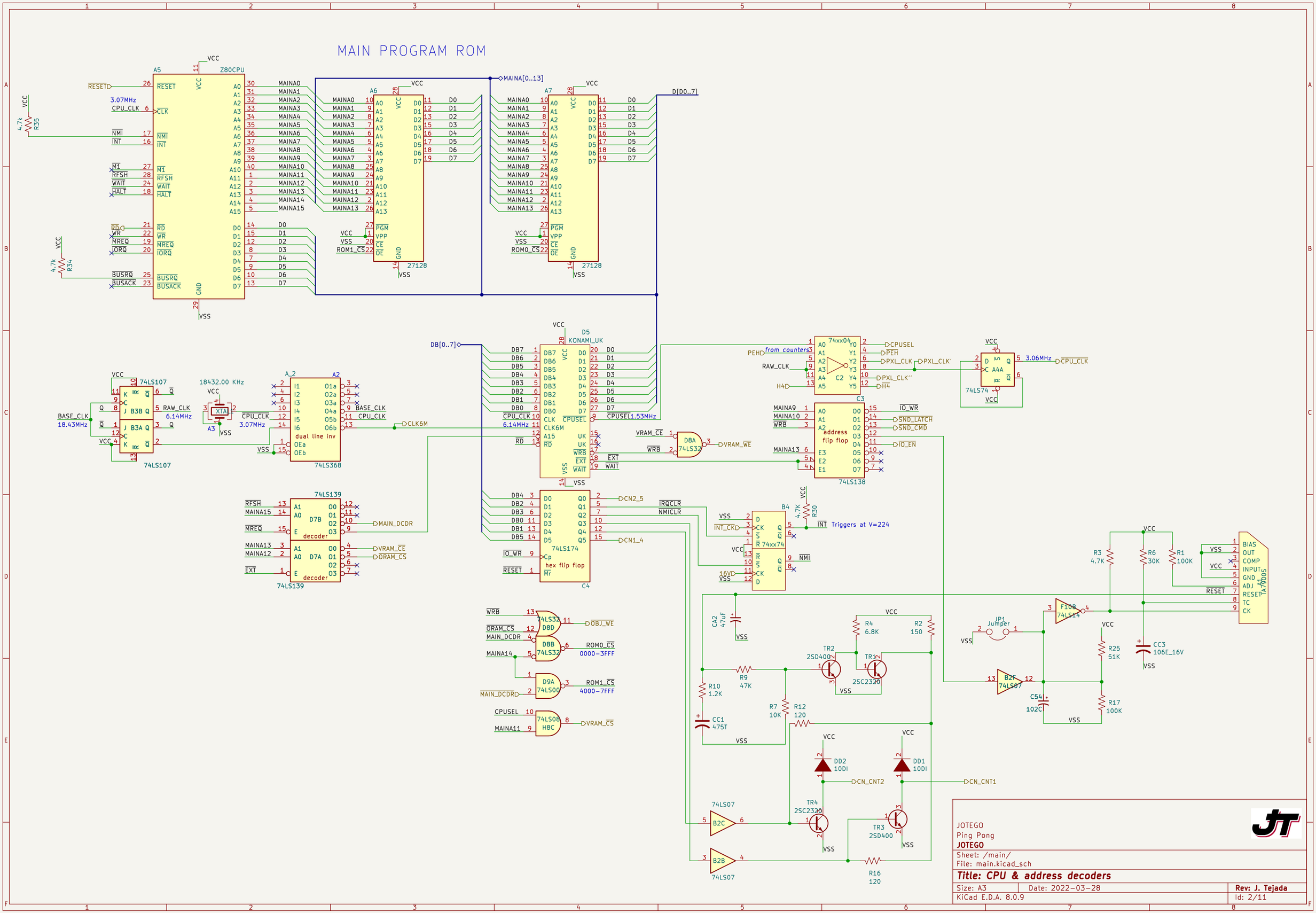

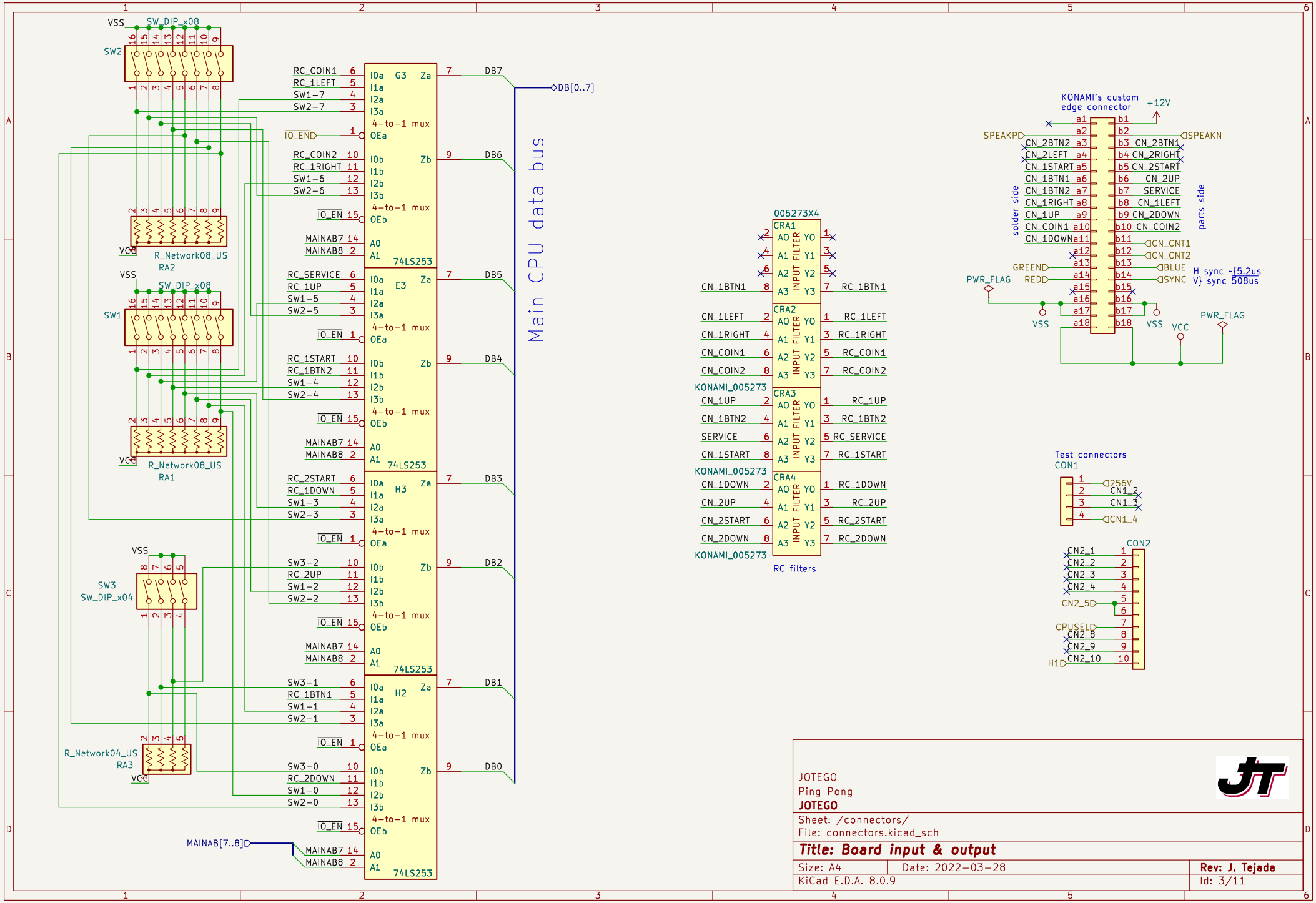

JOTEGO
Ping Pong
JOTEGO

Sheet: /connectors/
File: connectors.kicad_sch

Title: Board input & output

Size: A4	Date: 2022-03-28	**Rev: J. Tejada**
KiCad E.D.A. 8.0.9		Id: 3/11

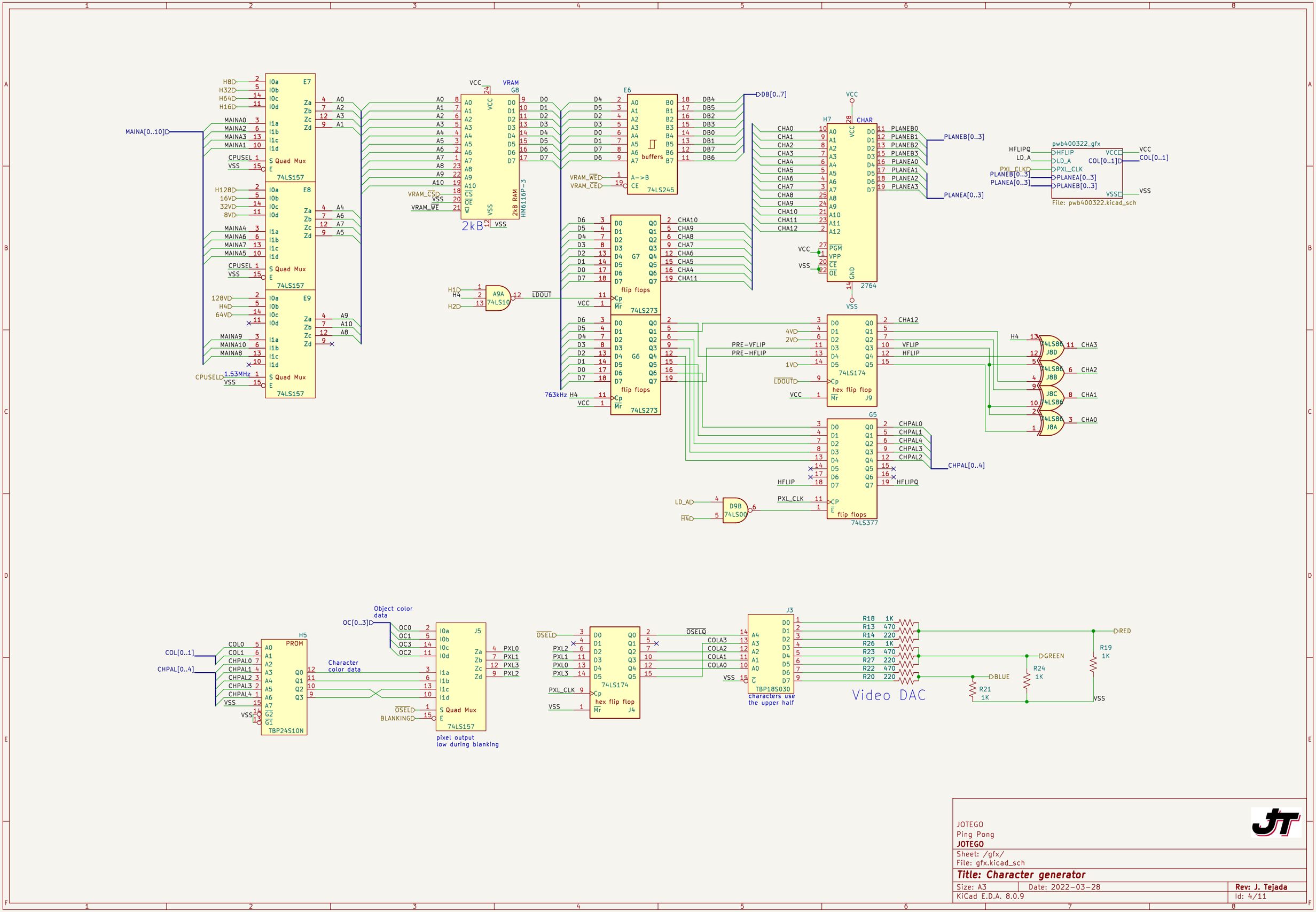

JOTEGO
Ping Pong
JOTEGO

Sheet: /gfx/
File: gfx.kicad_sch

Title: Character generator

Size: A3	Date: 2022-03-28	**Rev: J. Tejada**
KiCad E.D.A. 8.0.9		Id: 4/11

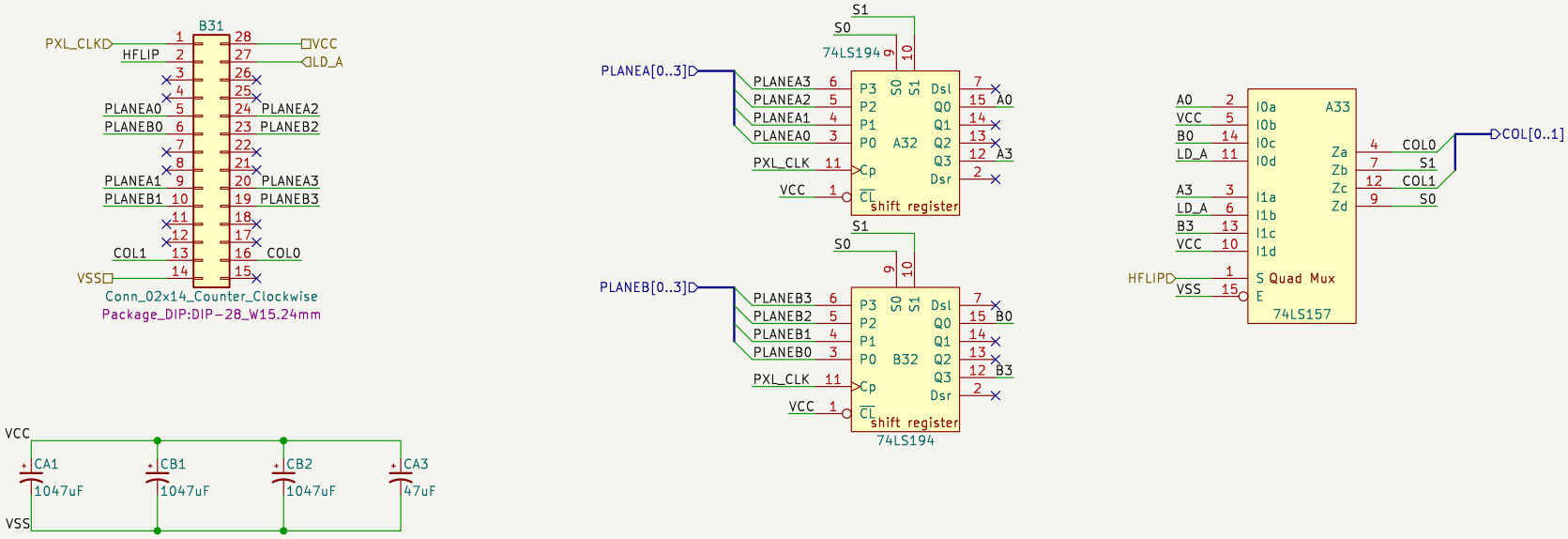

This is a small board soldered to a DIP-28 footprint. It appears twice in the design

PWB-400322

JOTEGO
Ping Pong
JOTEGO

Sheet: /gfx/pwb400322_gfx/
File: pwb400322.kicad_sch

Title: Pixel shift register

Size: A4	Date: 2022-03-28	**Rev: J. Tejada**
KiCad E.D.A. 8.0.9		Id: 5/11

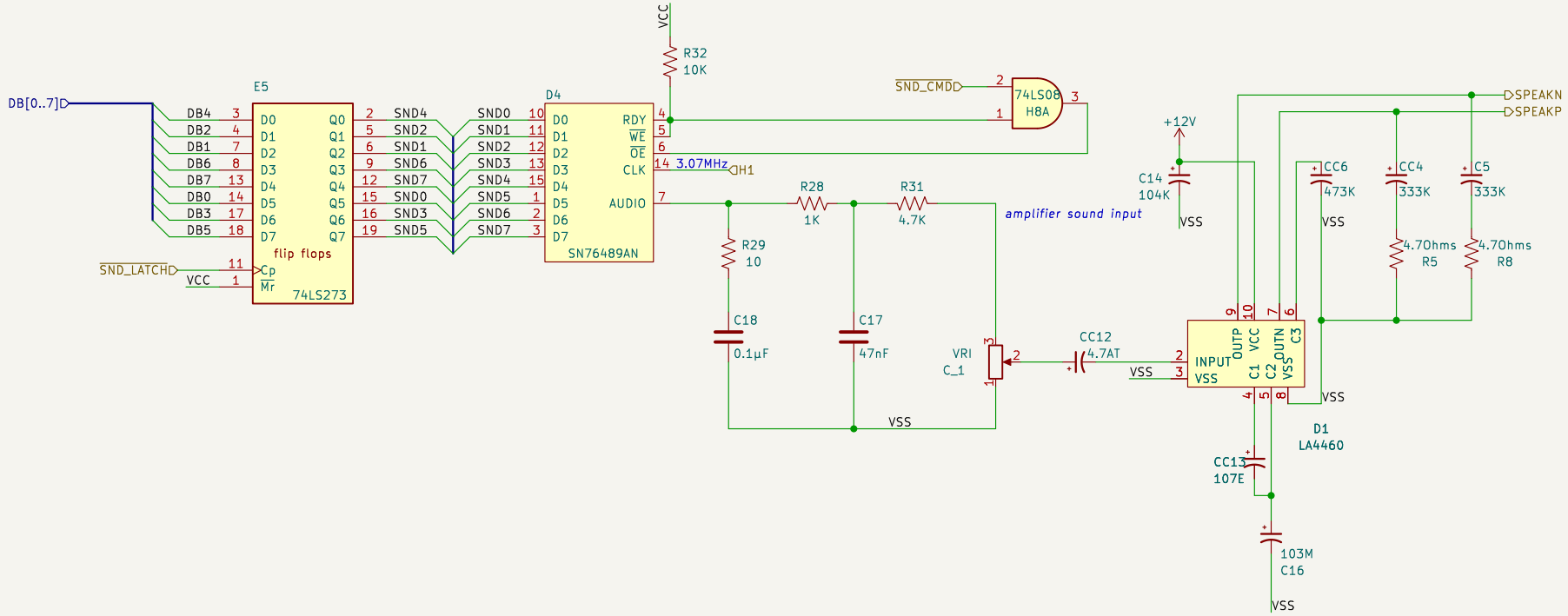

JOTEGO
Ping Pong
JOTEGO

Sheet: /sound/
File: sound.kicad_sch

Title: Sound generator

Size: A4	Date: 2022-03-28	**Rev: J. Tejada**
KiCad E.D.A. 8.0.9		Id: 6/11

OBJRAM

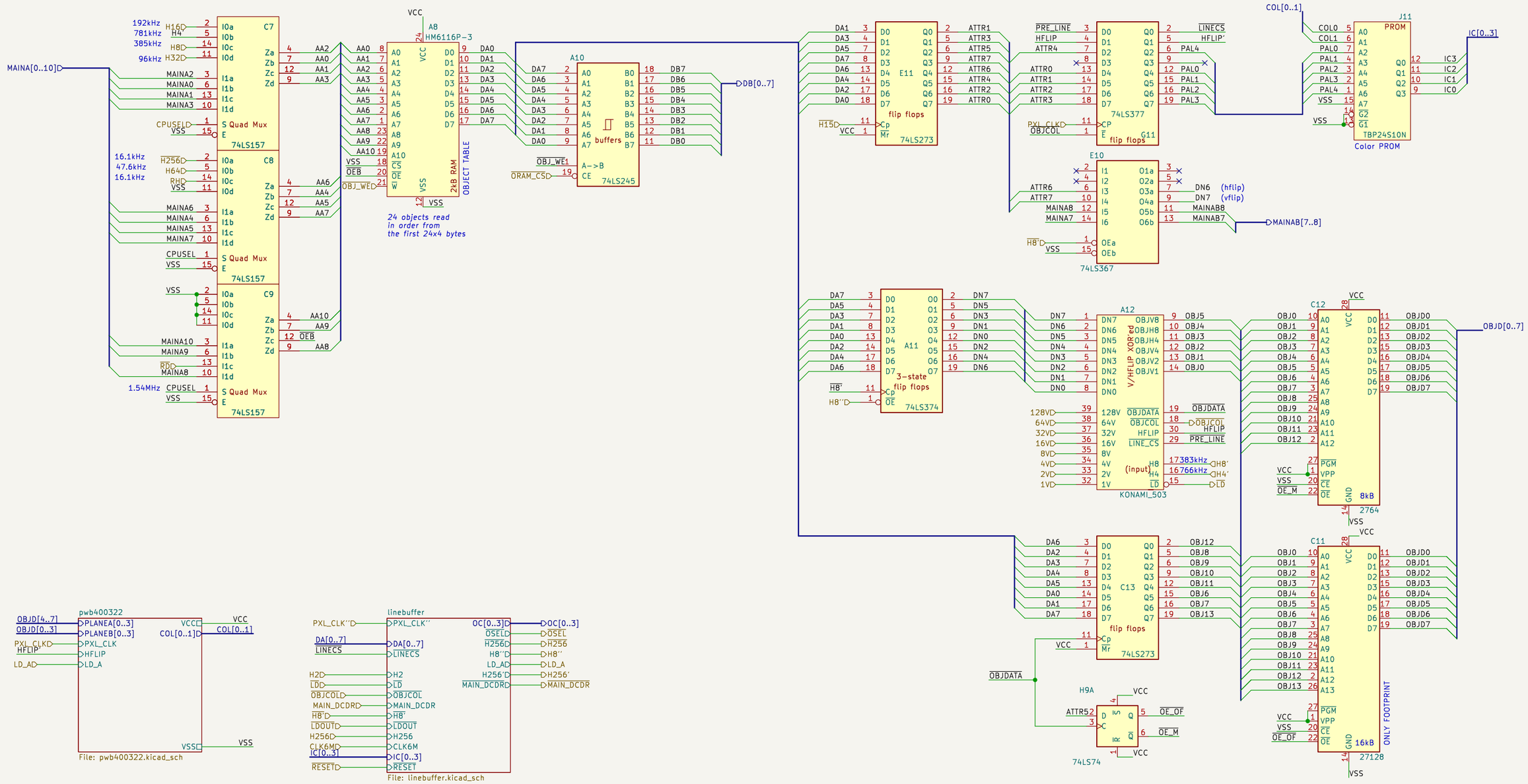

JOTEGO
Ping Pong
JOTEGO

Sheet: /object/
File: object.kicad_sch

Title: Object generator

Size: A3	Date: 2022-03-28	**Rev: J. Tejada**
KiCad E.D.A. 8.0.9		Id: 7/11

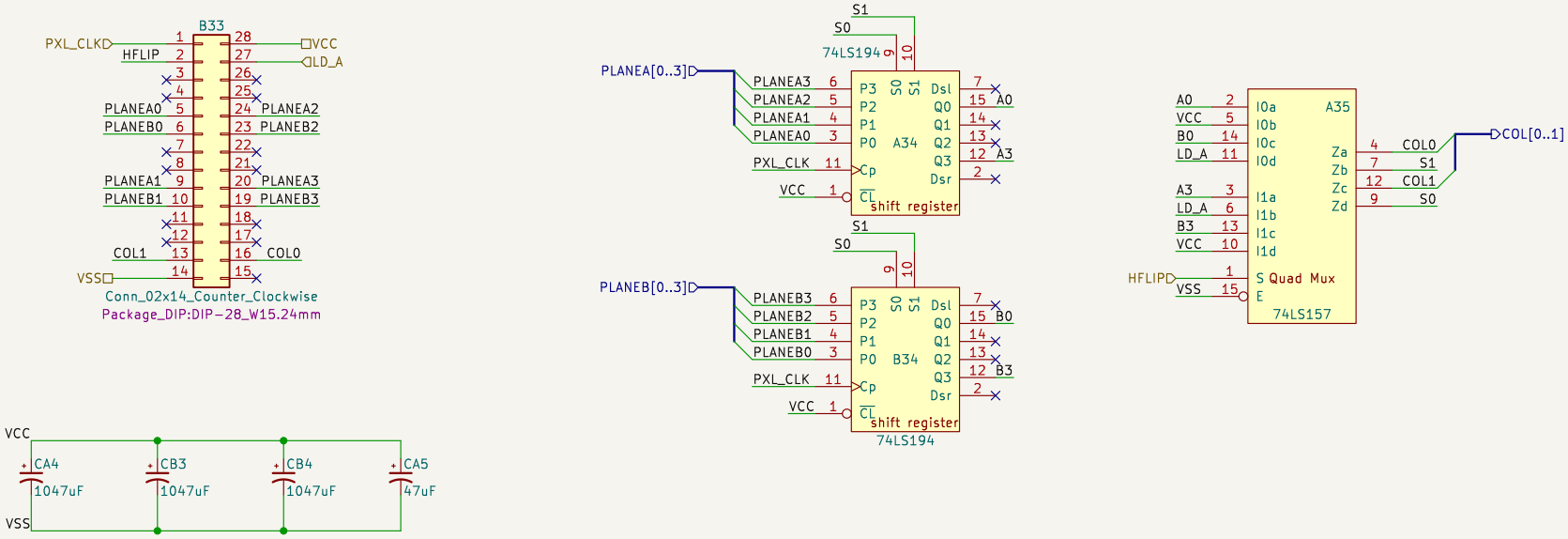

This is a small board soldered to a DIP-28 footprint. It appears twice in the design

PWB-400322

JOTEGO
Ping Pong
JOTEGO

Sheet: /object/pwb400322/
File: pwb400322.kicad_sch

Title: Pixel shift register

Size: A4	Date: 2022-03-28	**Rev: J. Tejada**
KiCad E.D.A. 8.0.9		Id: 8/11

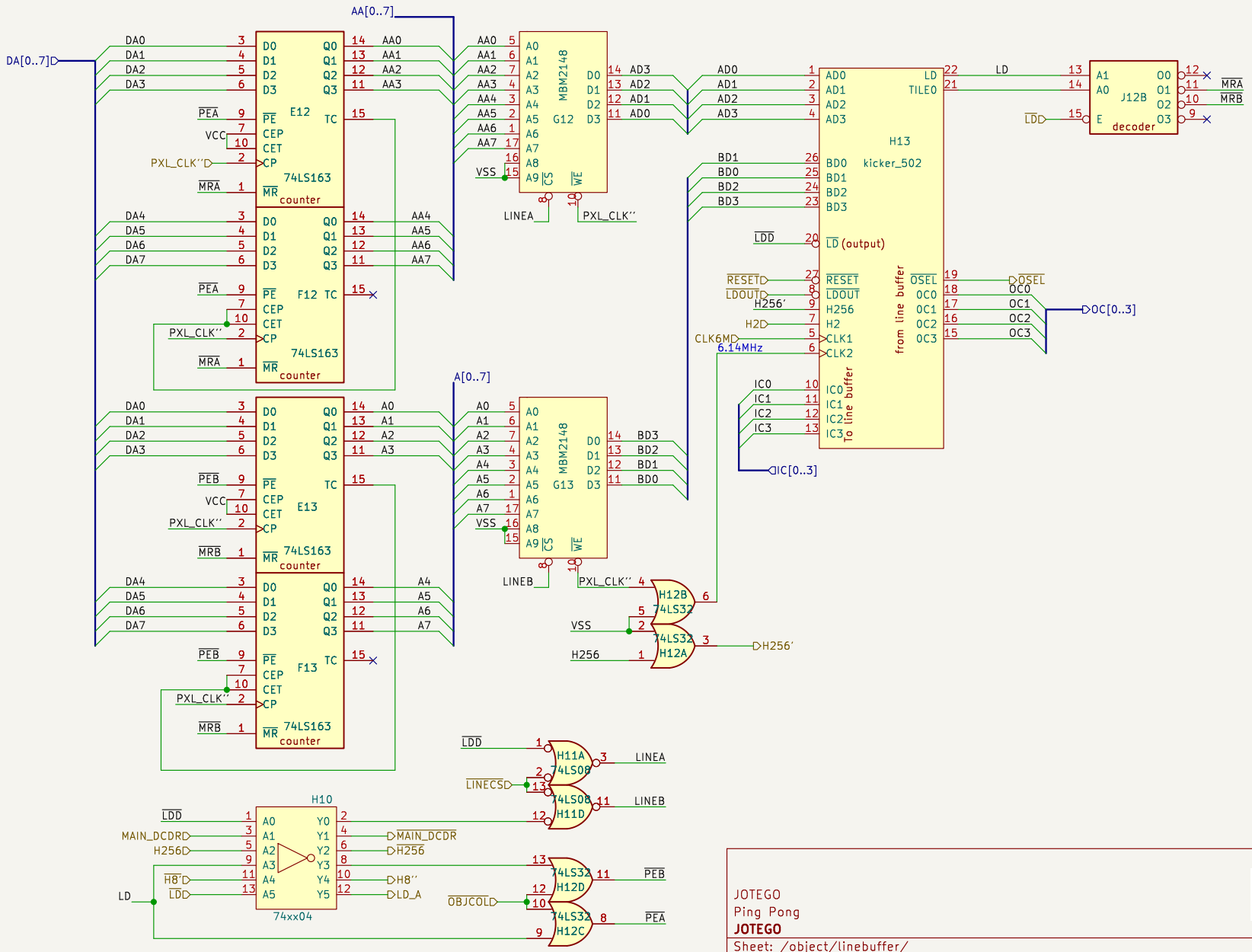

JOTEGO
Ping Pong
JOTEGO

Sheet: /object/linebuffer/
File: linebuffer.kicad_sch

Title: Doube line buffer

Size: A4	Date: 2022-03-28	**Rev: J. Tejada**
KiCad E.D.A. 8.0.9		Id: 9/11

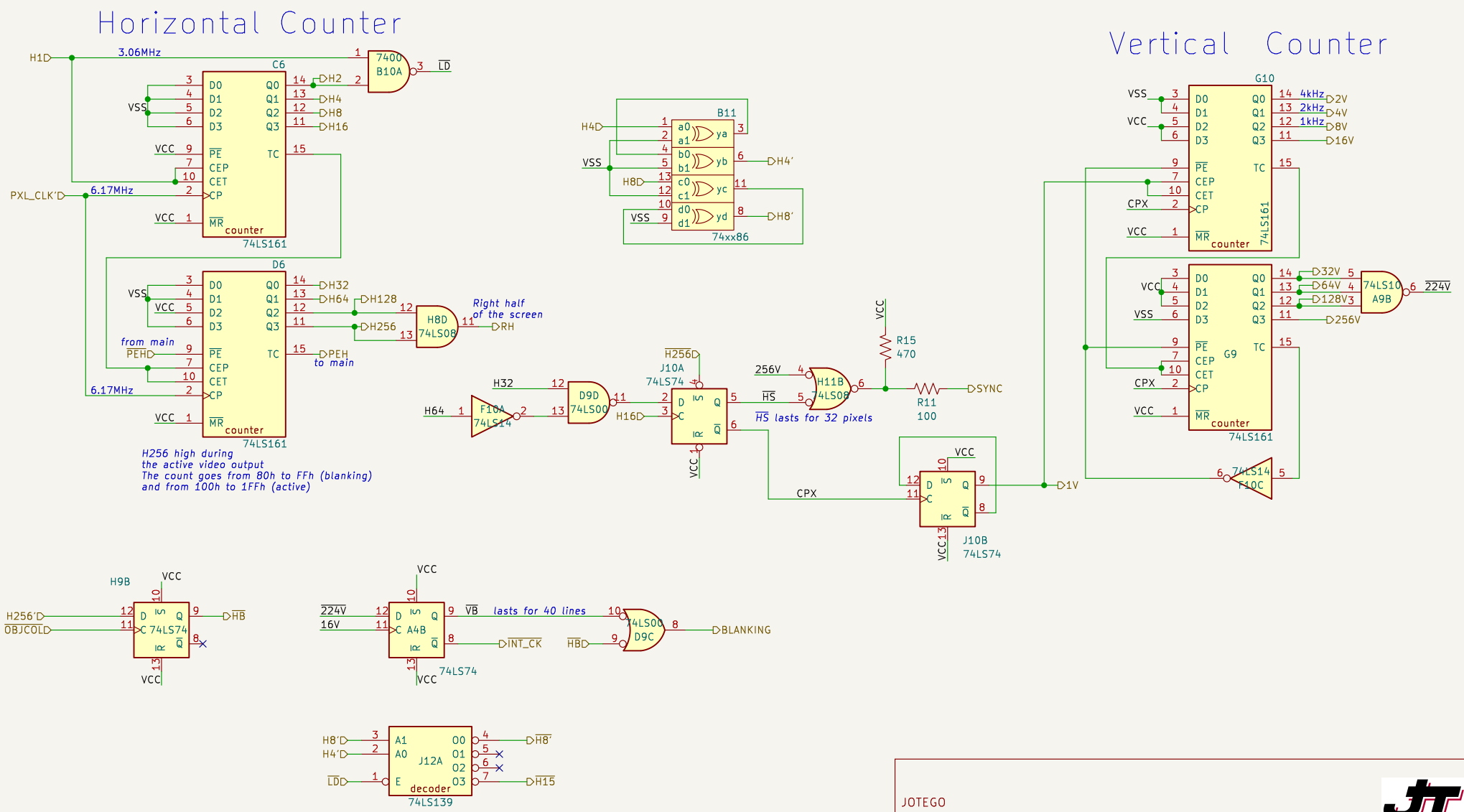

JOTEGO
Ping Pong
JOTEGO

Sheet: /hvcounter/
File: hvcounter.kicad_sch

Title: Horizontal and vertical counters

Size: A4	Date: 2022-03-28	**Rev: J. Tejada**
KiCad E.D.A. 8.0.9		Id: 10/11

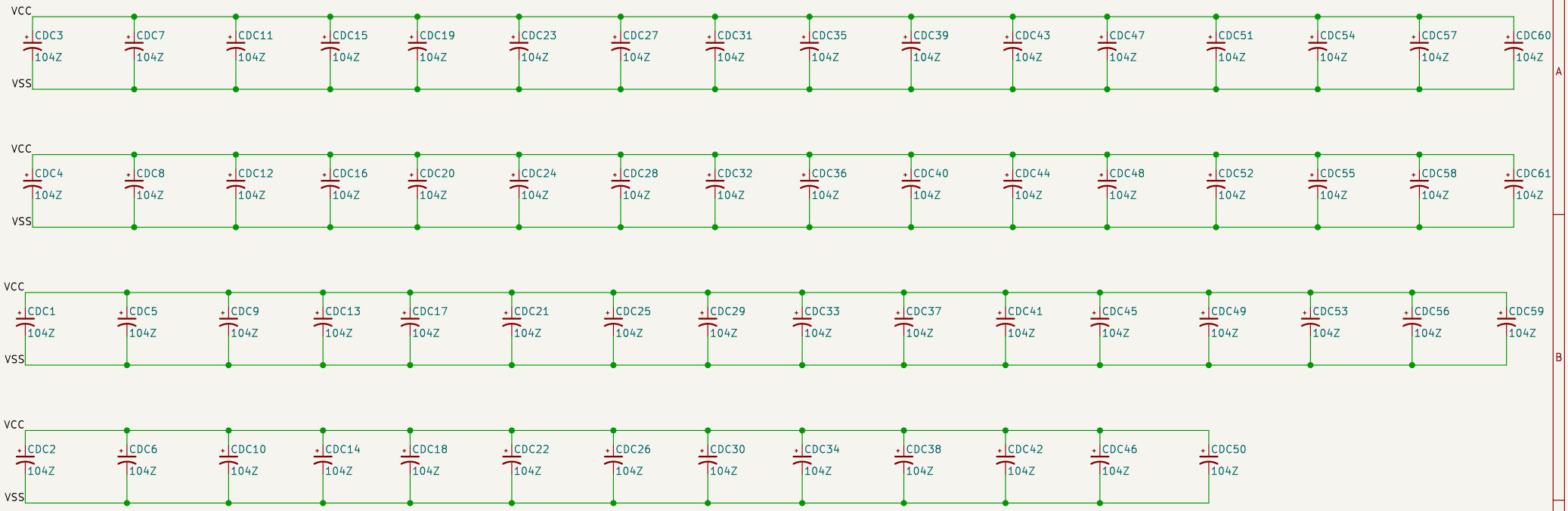

The device references in this sheet does not represent the actual PCB position (except for C8). The number and size of the capacitors is correct. They are distributed across the whole board.

JOTEGO
Ping Pong
JOTEGO

Sheet: /capacitors/
File: capacitors.kicad_sch

Title: Decoupling capacitors

Size: A4	Date: 2022-03-28	**Rev: J. Tejada**
KiCad E.D.A. 8.0.9		Id: 11/11