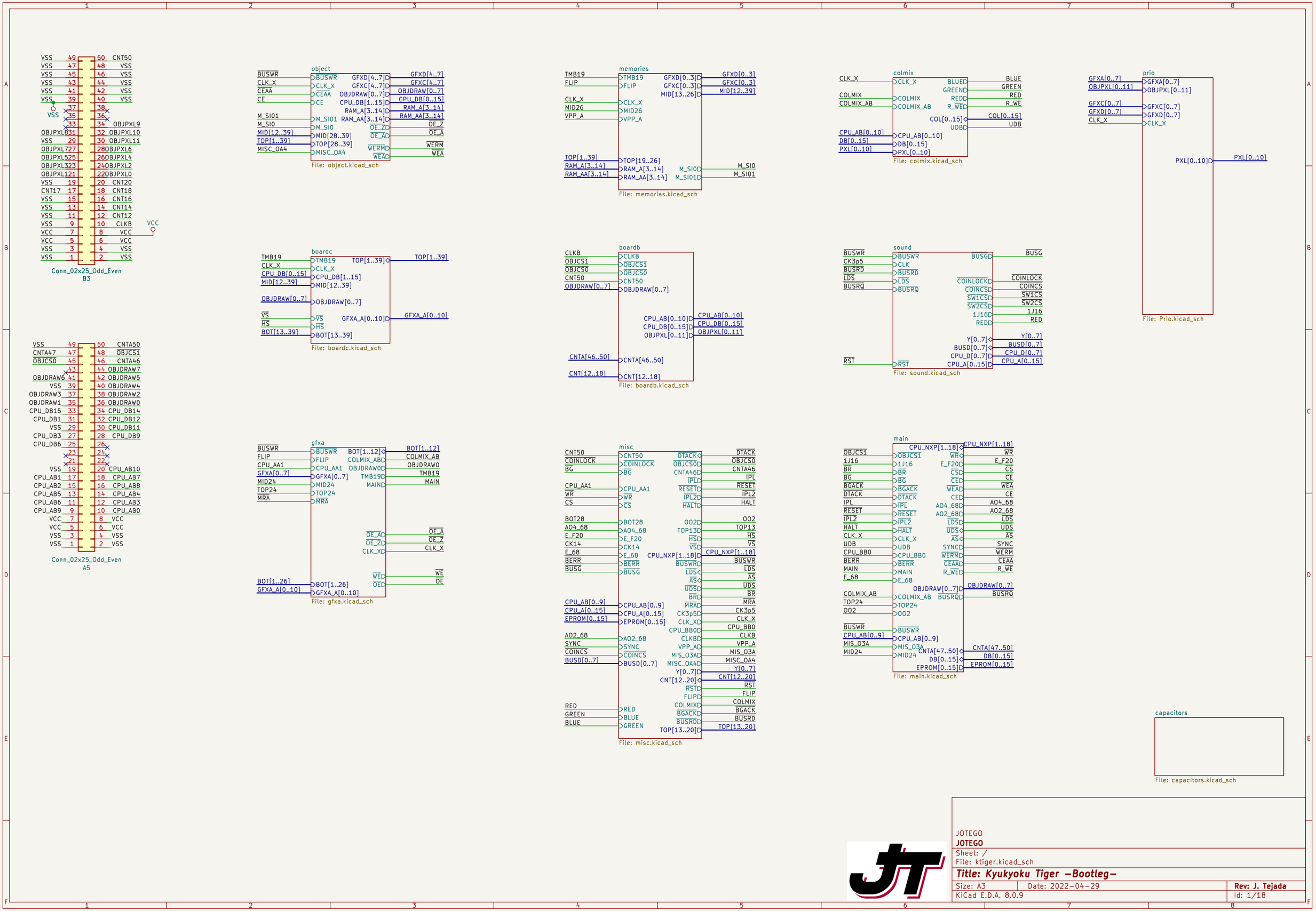
Conn_02x25_Odd_Even
B3
Conn_02x25_Odd_Even
A5
object
File: object.kicad_sch
memories
File: memorias.kicad_sch
colmix
File: colmix.kicad_sch
prio
File: Prio.kicad_sch
boardc
File: boardc.kicad_sch
boardb
File: boardb.kicad_sch
sound
File: sound.kicad_sch
gfxa
File: gfxa.kicad_sch
misc
File: misc.kicad_sch
main
File: main.kicad_sch
capacitors
File: capacitors.kicad_sch
JOTEGO
JOTEGO
Sheet: /
File: ktiger.kicad_sch
Title: Kyukyoku Tiger –Bootleg–
Size: A3
Date: 2022-04-29
Rev: J. Tejada
KiCad E.D.A. 8.0.9
Id: 1/18

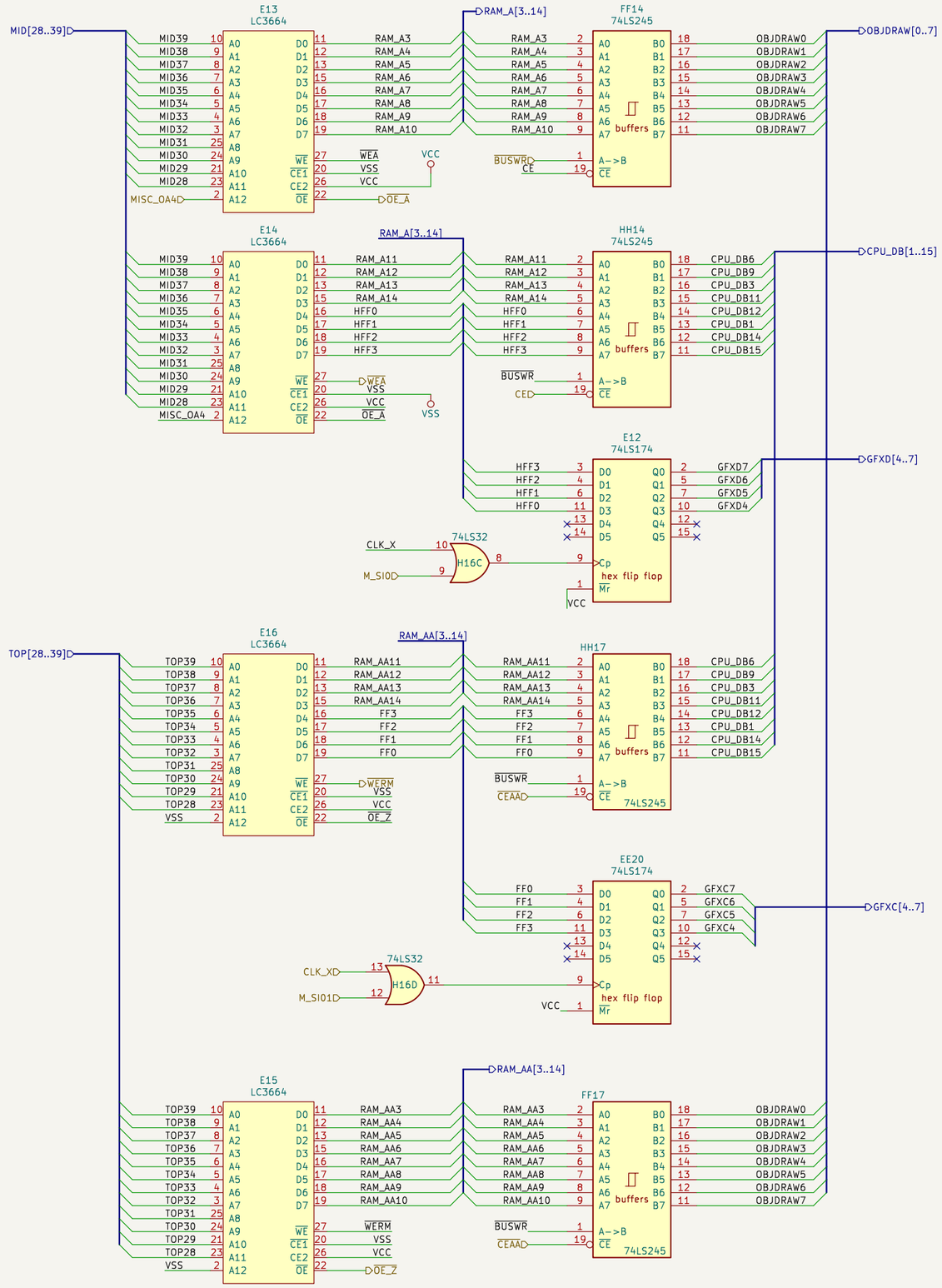

JOTEGO
JOTEGO
Sheet: /object/
File: object.kicad_sch

Title:

Size: A3	Date: 2022-04-29	**Rev: J. Tejada**
KiCad E.D.A. 8.0.9		Id: 2/18

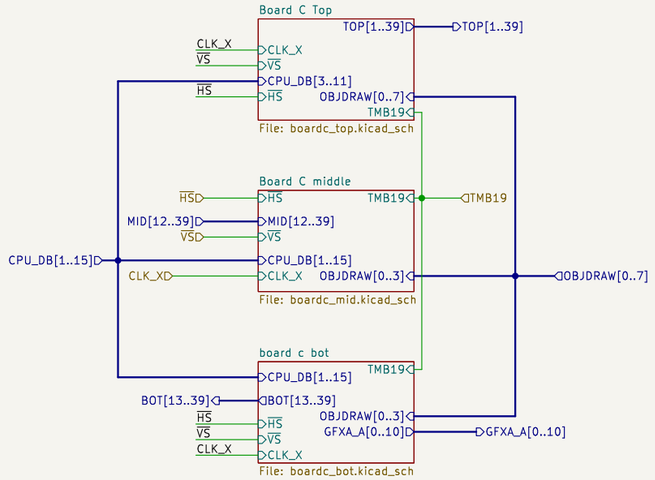

JOTEGO

JOTEGO

Sheet: /boardc/

File: boardc.kicad_sch

Title: Kyukyoku Tiger –Bootleg–

Size: A3	Date: 2022-04-29	**Rev: J. Tejada**
KiCad E.D.A. 8.0.9		Id: 3/18

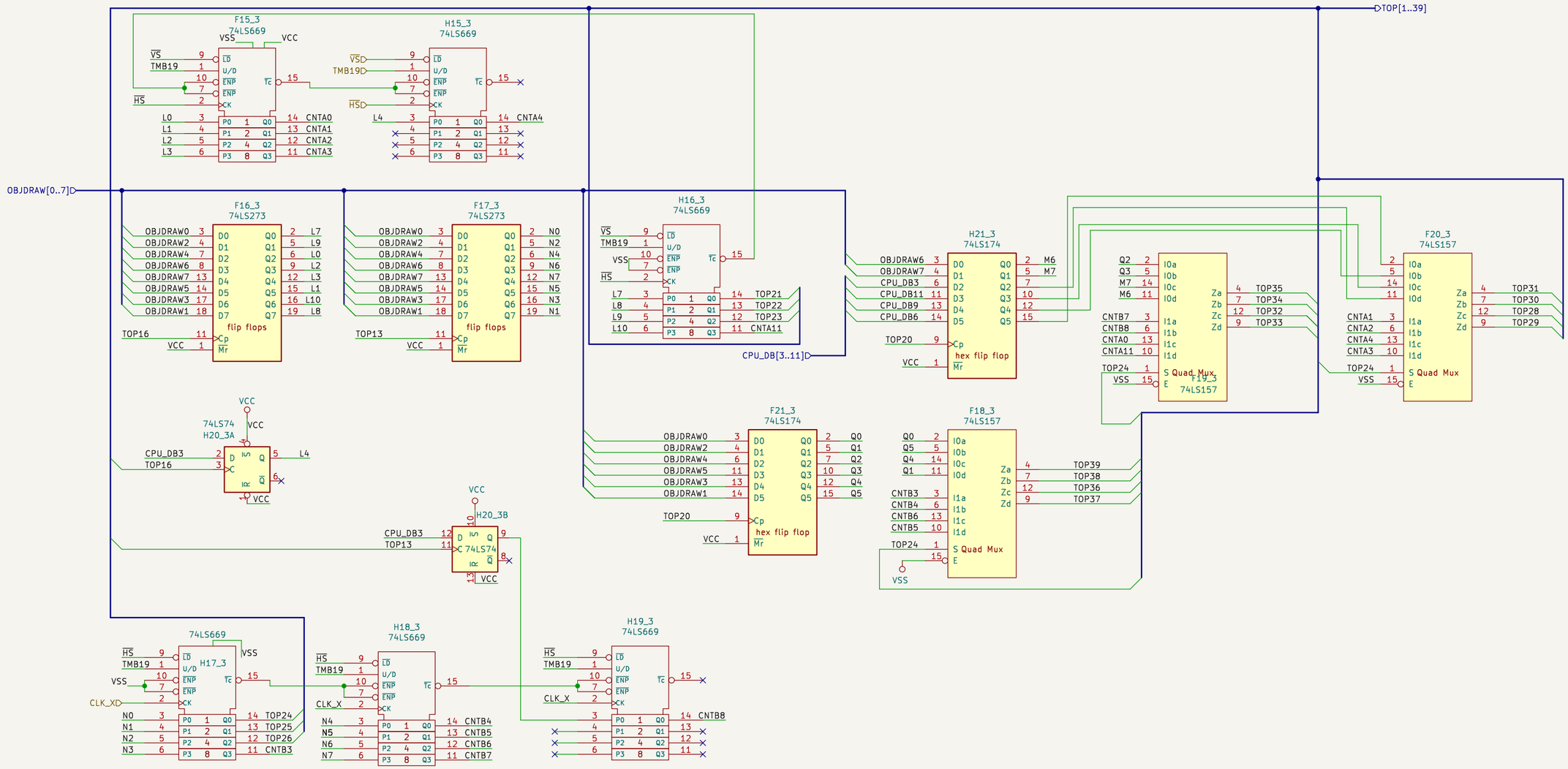

JOTEGO

JOTEGO

Sheet: /boardc/Board C Top/

File: boardc_top.kicad_sch

Title:

Size: A3	Date: 2022-04-29	**Rev: J. Tejada**
KiCad E.D.A. 8.0.9		Id: 4/18

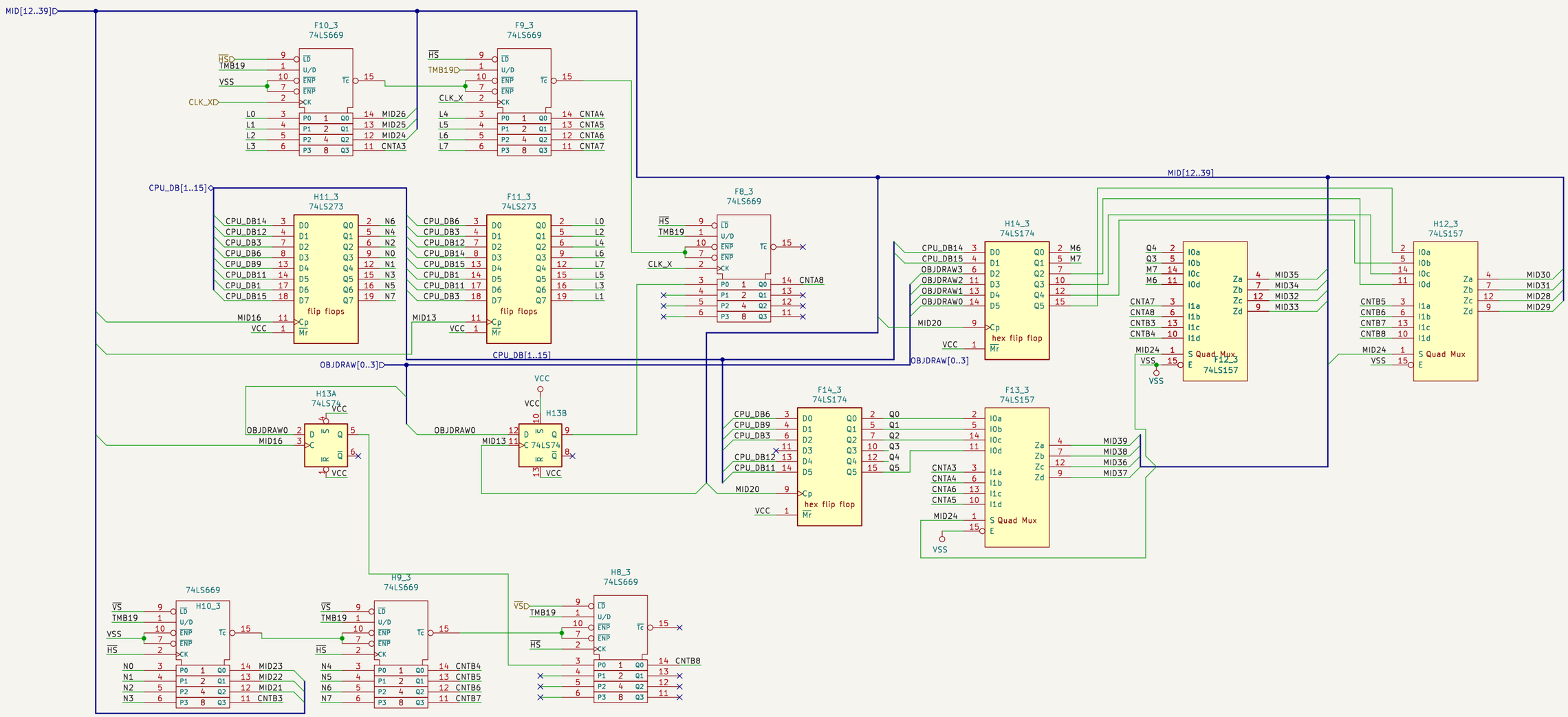

JOTEGO

JOTEGO

Sheet: /boardc/Board C middle/

File: boardc_mid.kicad_sch

Title:

Size: A3	Date: 2022-04-29	**Rev: J. Tejada**
KiCad E.D.A. 8.0.9		Id: 5/18

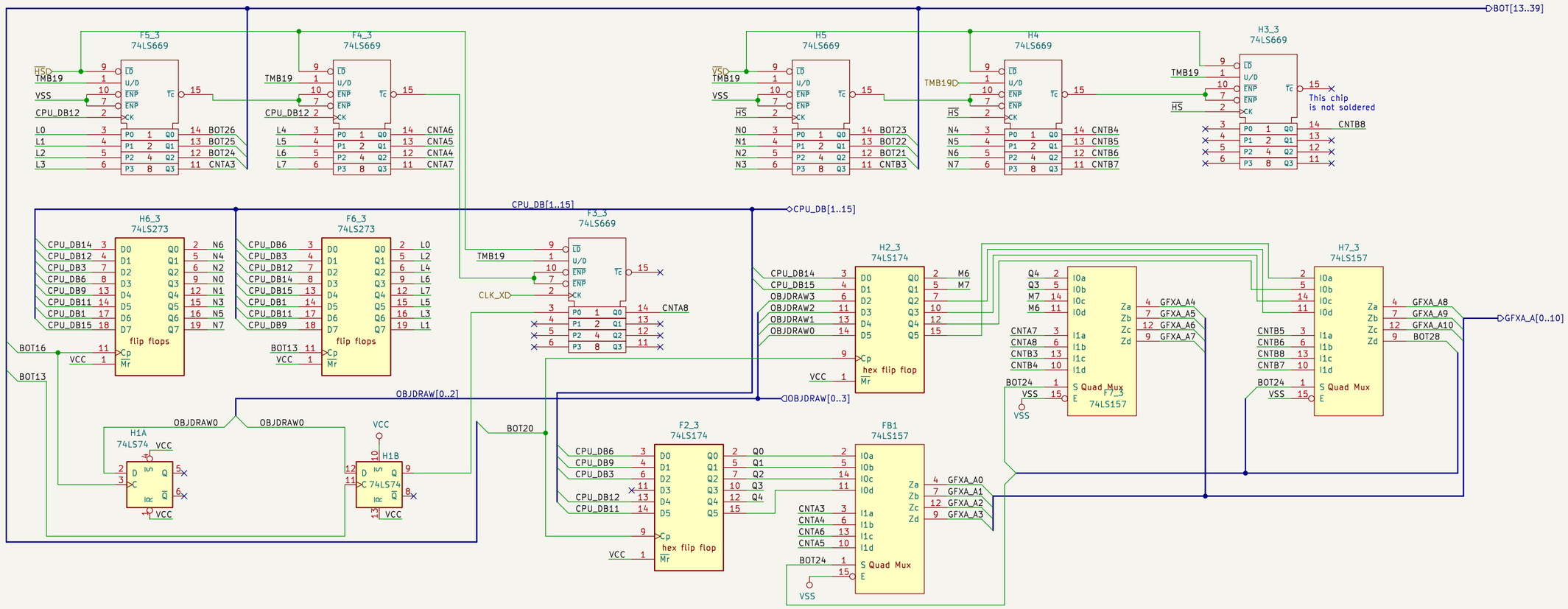

JOTEGO

JOTEGO

Sheet: /boardc/board c bot/

File: boardc_bot.kicad_sch

Title:

Size: A3	Date: 2022-04-29	**Rev: J. Tejada**
KiCad E.D.A. 8.0.9		Id: 6/18

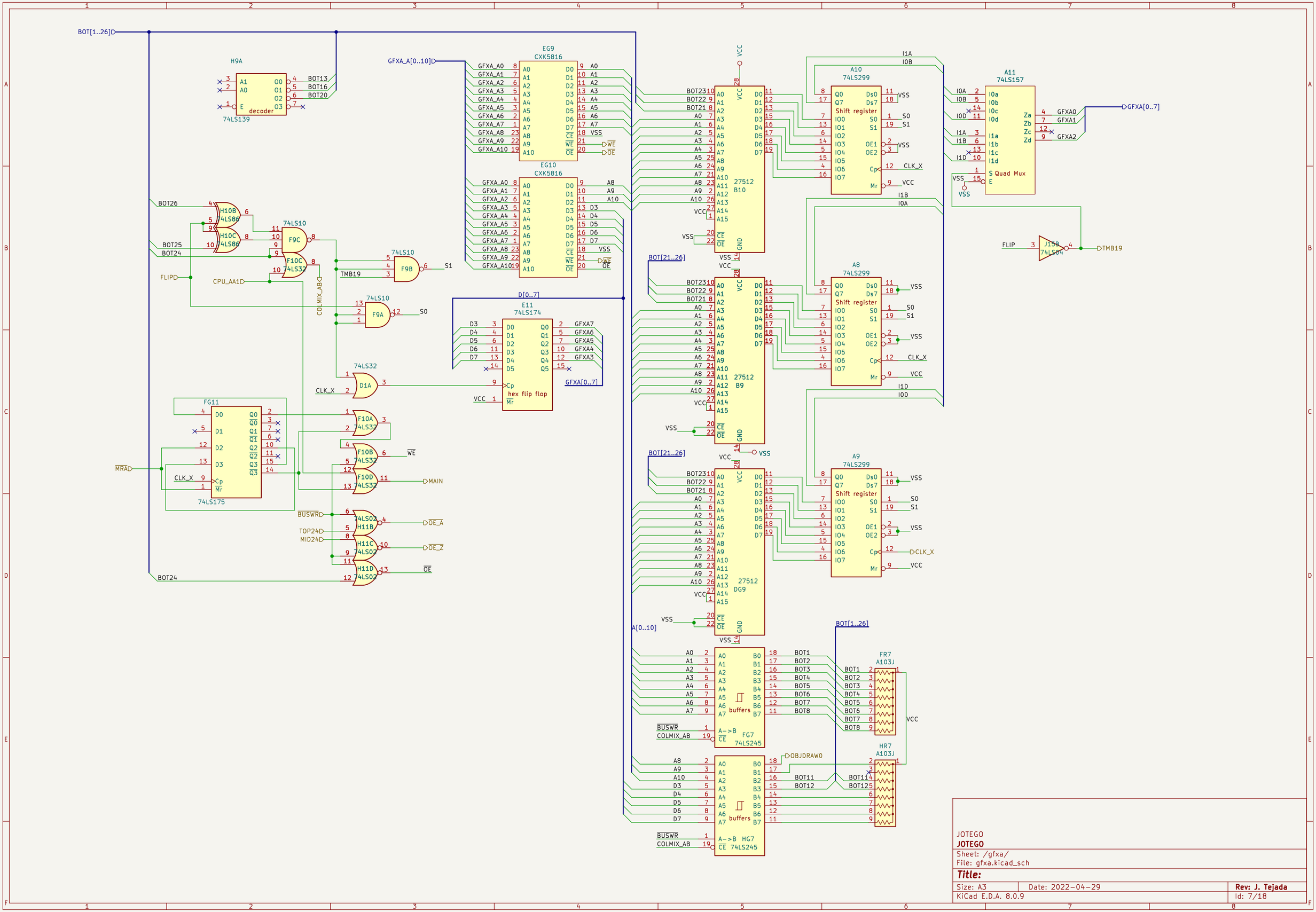

JOTEGO

JOTEGO

Sheet: /gfxa/

File: gfxa.kicad_sch

Title:

Size: A3	Date: 2022-04-29	**Rev: J. Tejada**
KiCad E.D.A. 8.0.9		Id: 7/18

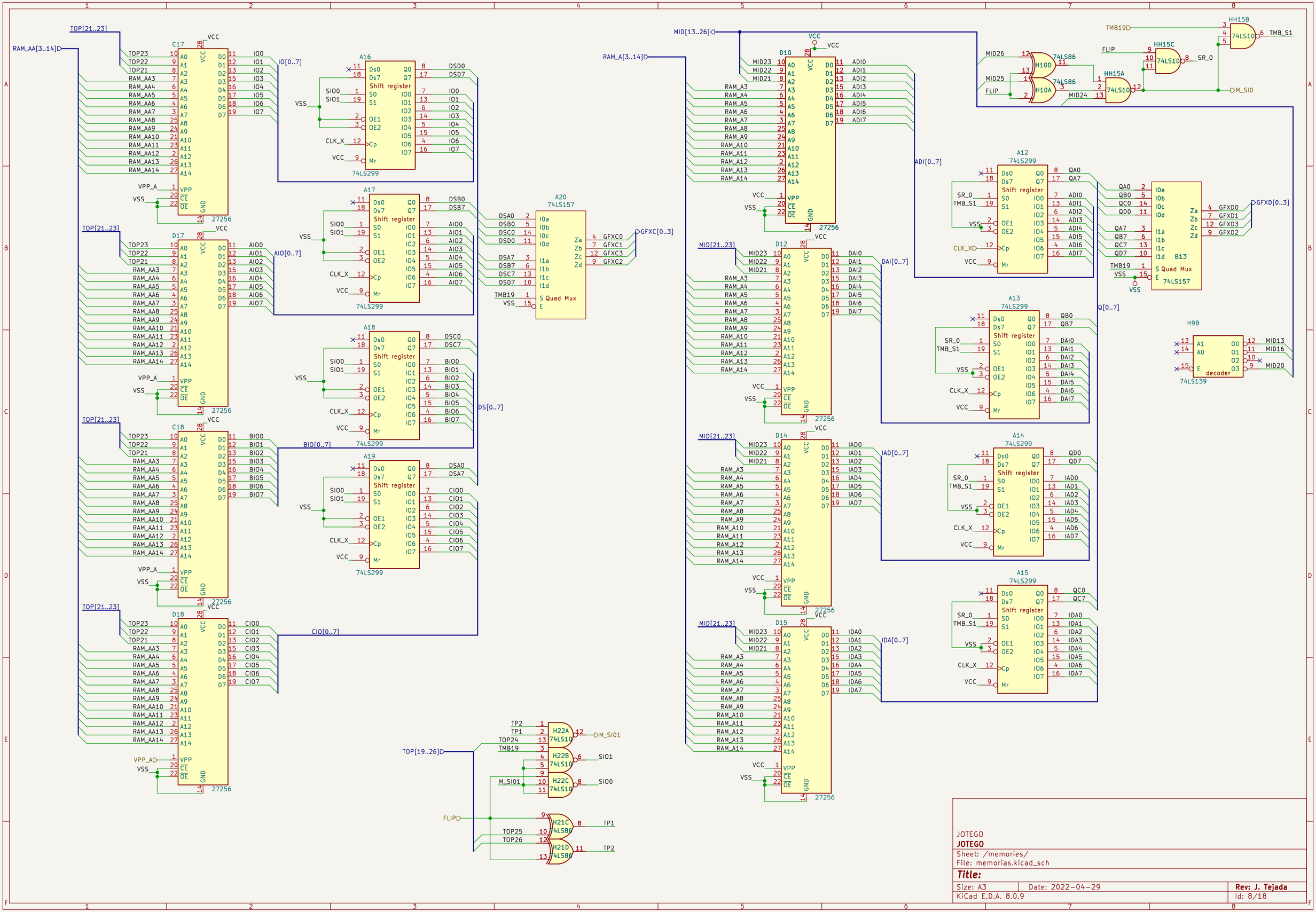

JOTEGO
JOTEGO
Sheet: /memories/
File: memorias.kicad_sch

Title:

Size: A3	Date: 2022-04-29	**Rev: J. Tejada**
KiCad E.D.A. 8.0.9		Id: 8/18

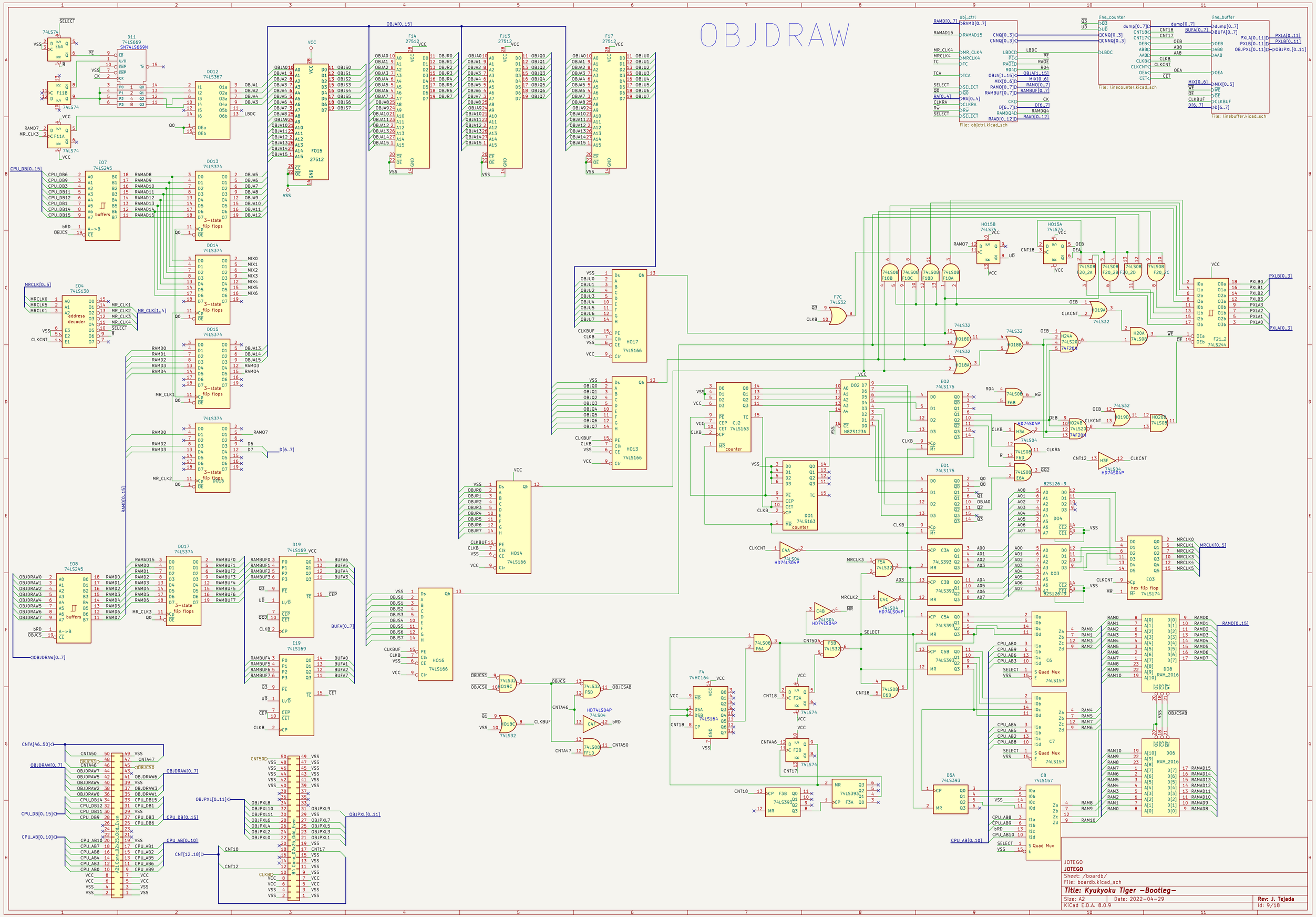
OBJDRAW
obj_ctrl
File: objctrl.kicad_sch
line_counter
File: linecounter.kicad_sch
line_buffer
File: linebuffer.kicad_sch
JOTEGO
JOTEGO
Sheet: /boardb/
File: boardb.kicad_sch
Title: Kyukyoku Tiger –Bootleg–
Size: A2
Date: 2022-04-29
Rev: J. Tejada
KiCad E.D.A. 8.0.9
Id: 9/18

OBJCTRL

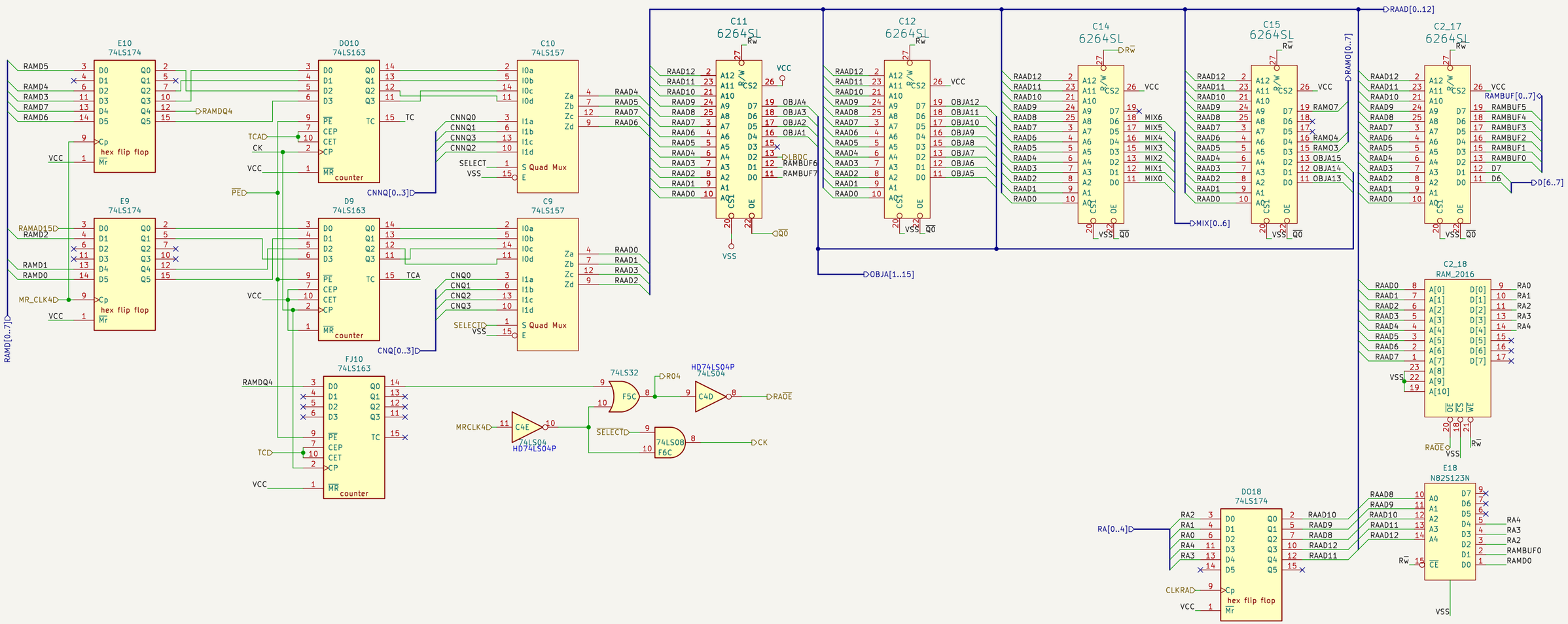

JOTEGO
JOTEGO

Sheet: /boardb/obj_ctrl/
File: objctrl.kicad_sch

Title:

Size: A3	Date: 2022-04-29	**Rev: J. Tejada**
KiCad E.D.A. 8.0.9		Id: 10/18

Line buffer dump counter

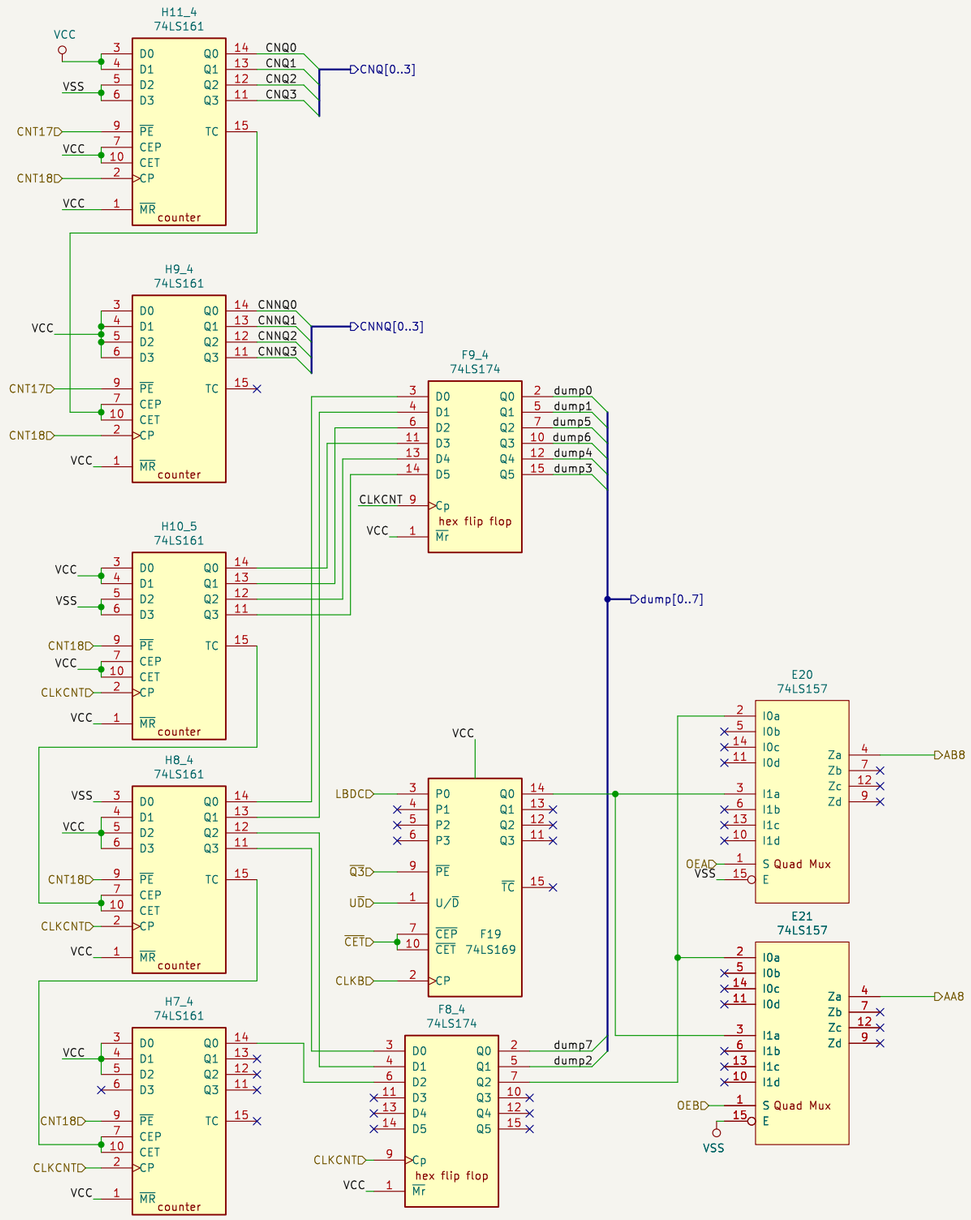

JOTEGO
JOTEGO

Sheet: /boardb/line_counter/
File: linecounter.kicad_sch

Title:

Size: A3	Date: 2022-04-29	**Rev: J. Tejada**
KiCad E.D.A. 8.0.9		Id: 11/18

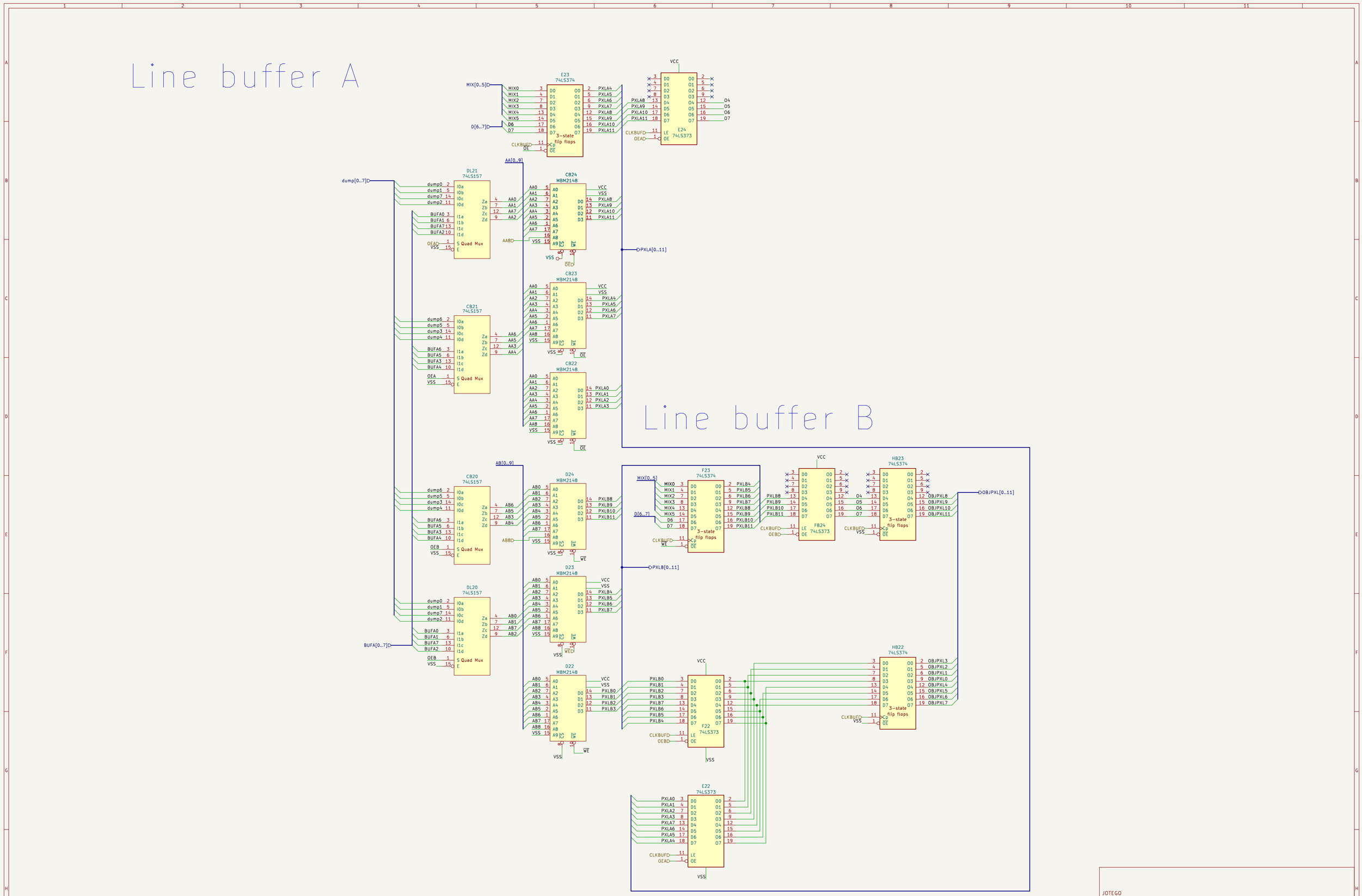

JOTEGO

JOTEGO

Sheet: /boardb/line_buffer/

File: linebuffer.kicad_sch

Title: Kyukyoku Tiger –Bootleg–

Size: A2	Date: 2022-04-29	**Rev: J. Tejada**
KiCad E.D.A. 8.0.9		Id: 12/18

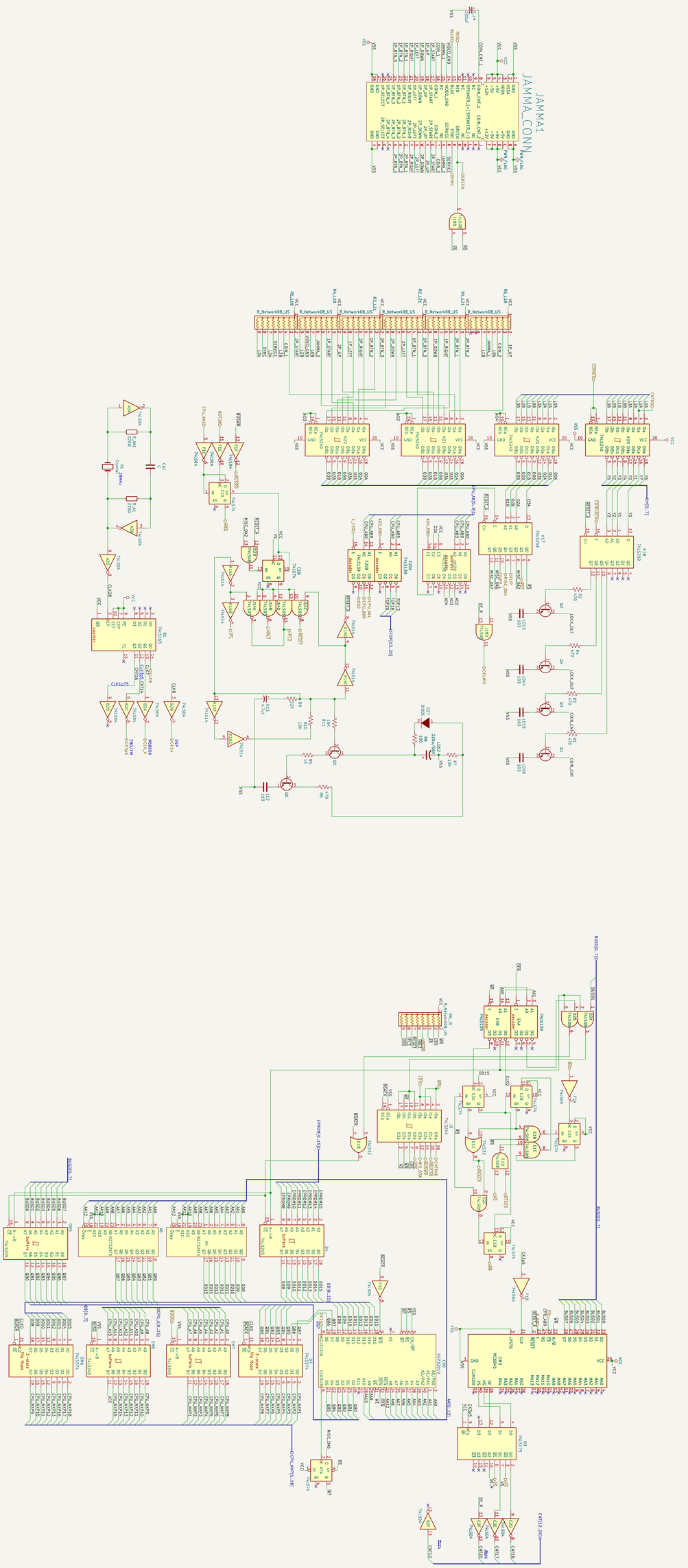
JAMMA1
JAMMA_CONN
JOITGO
Sebastian Tonkaz/
JOITGO
Sheet: /
File: mmc.kicad_sch
Title:
Size: A1
Date: 2022-04-29
KiCad E.A.4 8.0.8
Rev: J. Tejada
01-17-18

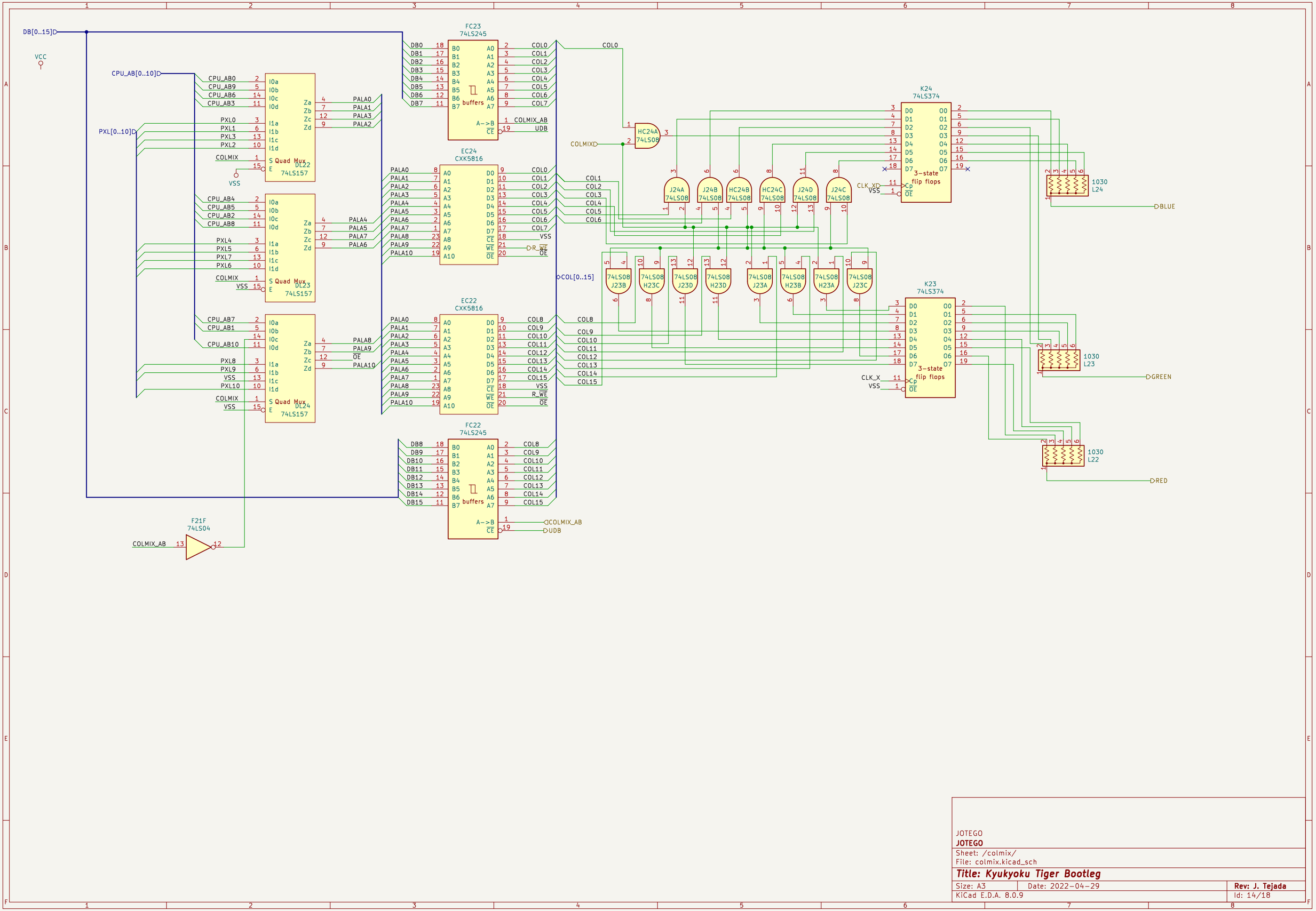

JOTEGO

JOTEGO

Sheet: /colmix/

File: colmix.kicad_sch

Title: Kyukyoku Tiger Bootleg

Size: A3	Date: 2022-04-29	**Rev: J. Tejada**
KiCad E.D.A. 8.0.9		Id: 14/18

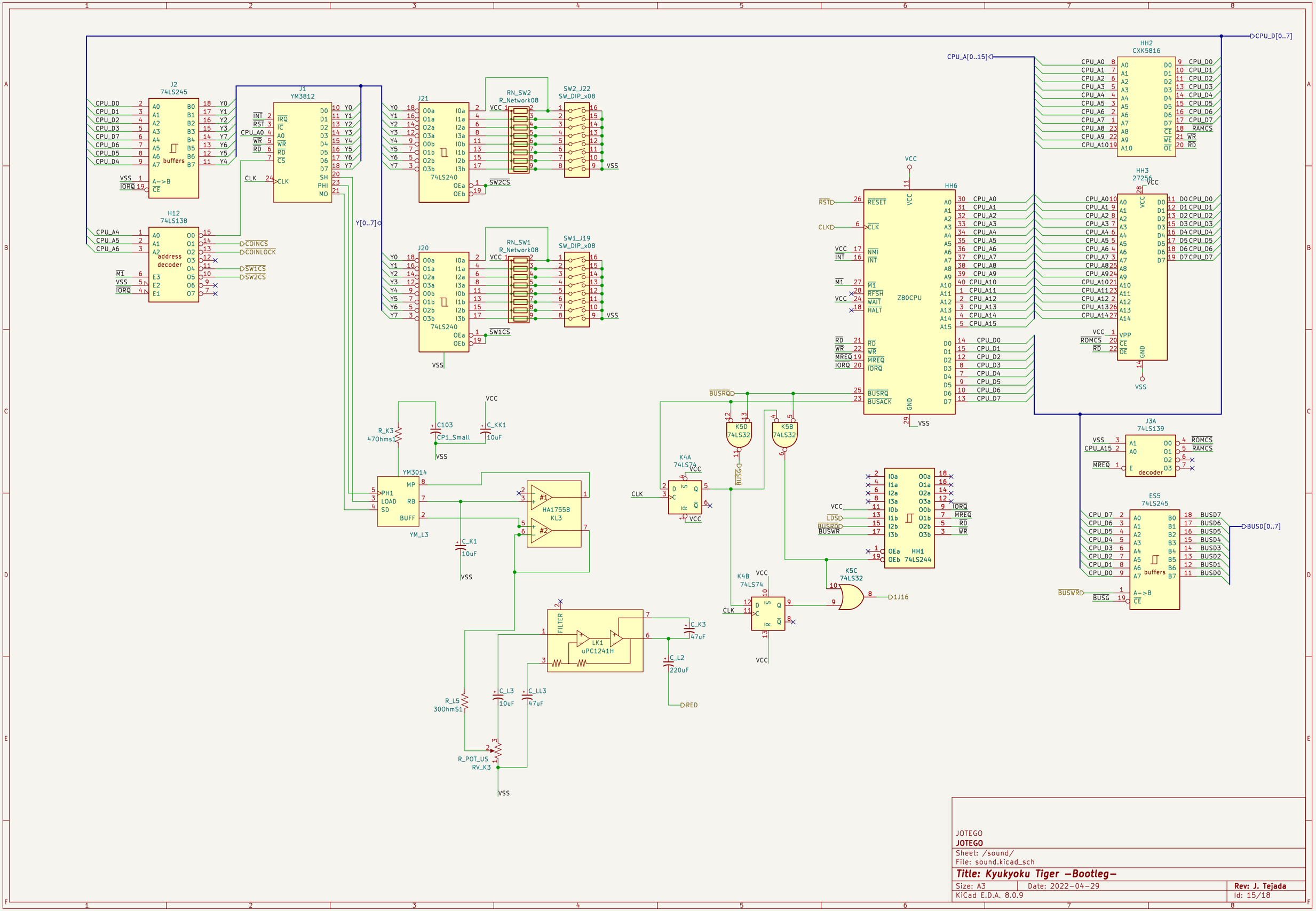

JOTEGO

JOTEGO

Sheet: /sound/

File: sound.kicad_sch

Title: Kyukyoku Tiger –Bootleg–

Size: A3	Date: 2022-04-29	**Rev: J. Tejada**
KiCad E.D.A. 8.0.9		Id: 15/18

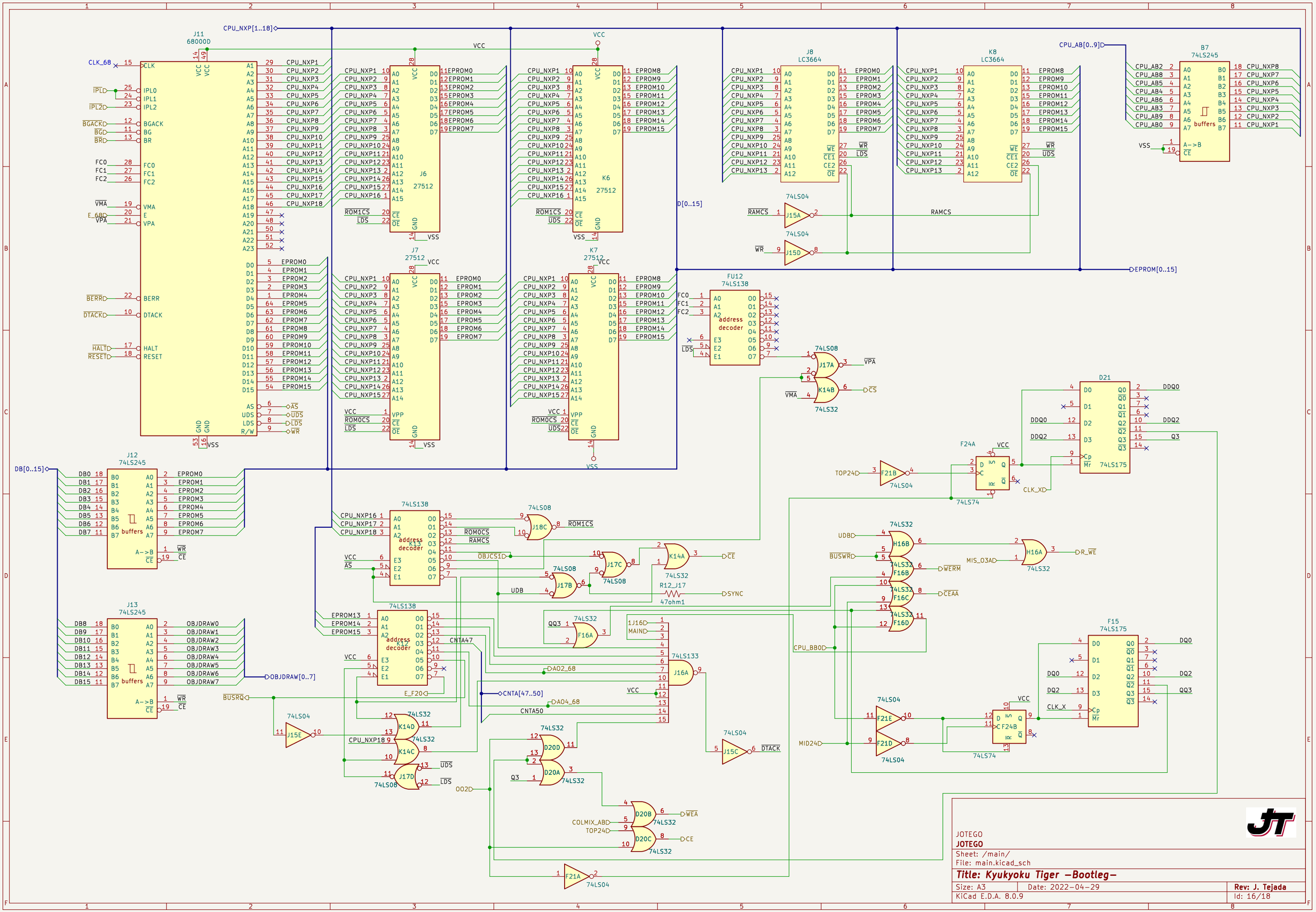
J11
68000D
J12
74LS245
J13
74LS245
J6
27512
J7
27512
K6
27512
K7
27512
J8
LC3664
K8
LC3664
B7
74LS245
FU12
74LS138
K13
74LS138
K12
74LS138
D21
74LS175
F15
74LS175
F24A
74LS74
F24B
74LS74
CPU_NXP[1..18]
CPU_AB[0..9]
D[0..15]
EPROM[0..15]
DB[0..15]
OBJDRAW[0..7]
CNTA[47..50]
address decoder
buffers
JOTEGO
JOTEGO
Sheet: /main/
File: main.kicad_sch
Title: Kyukyoku Tiger –Bootleg–
Size: A3
Date: 2022-04-29
Rev: J. Tejada
KiCad E.D.A. 8.0.9
Id: 16/18

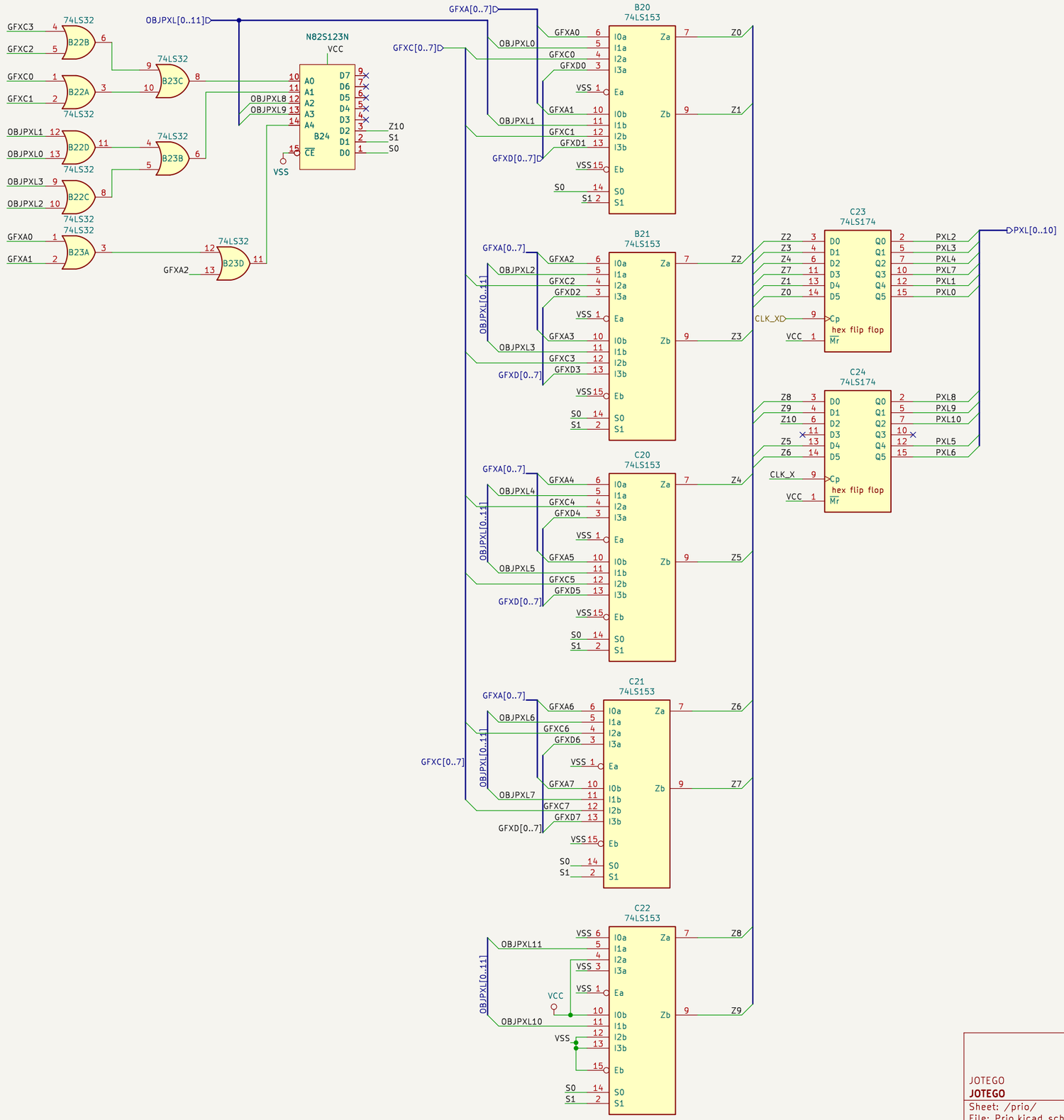

JOTEGO
JOTEGO

Sheet: /prio/
File: Prio.kicad_sch

Title:

Size: A3	Date: 2022-04-29	**Rev: J. Tejada**
KiCad E.D.A. 8.0.9		Id: 17/18

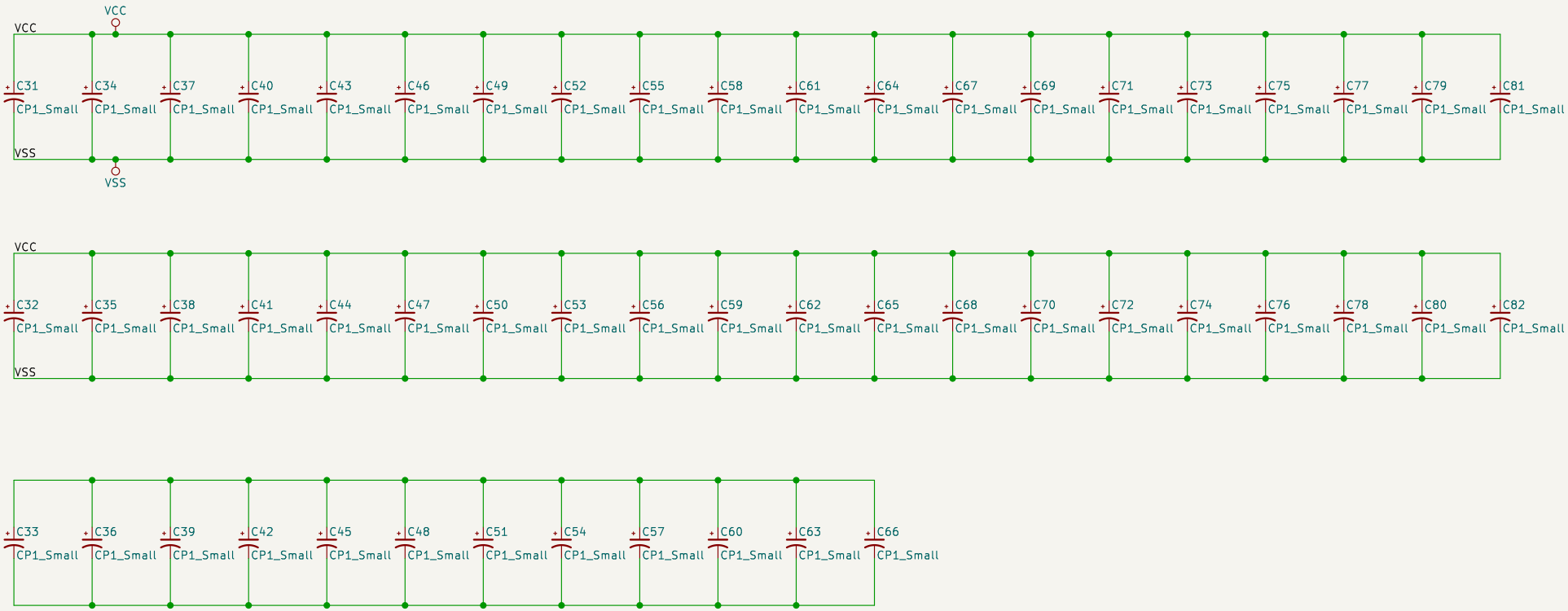

JOTEGO
JOTEGO

Sheet: /capacitors/
File: capacitors.kicad_sch

Title:

Size: A4	Date: 2022-04-29	**Rev: J. Tejada**
KiCad E.D.A. 8.0.9		Id: 18/18