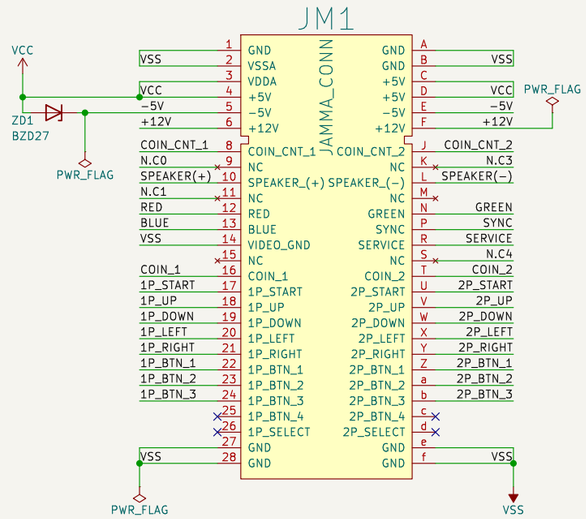

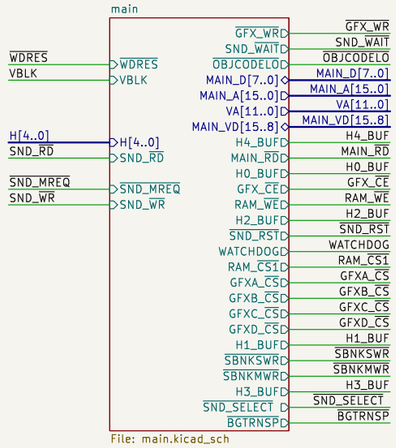

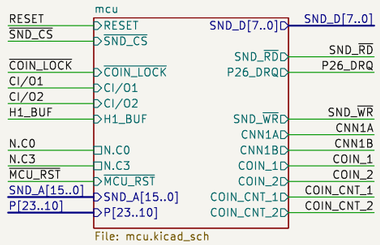

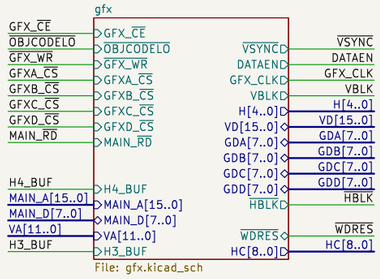

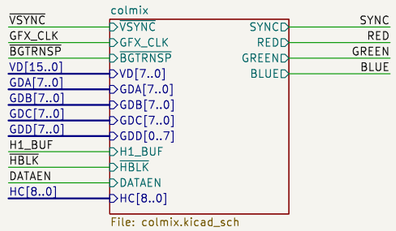

CABINET I/O

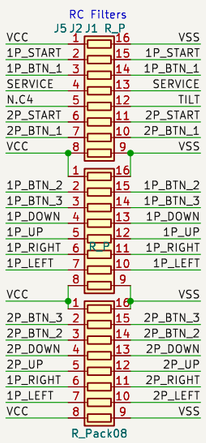

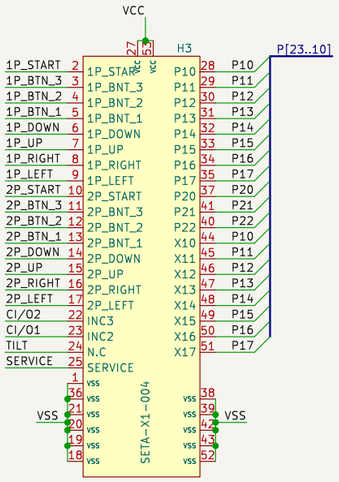

JOTEGO

Sheet: /

File: exterm.kicad_sch

Title: EXTERMINATION

Size: A3	Date: 29/08/2022	Rev: José Tejada G.
KiCad E.D.A. 8.0.9		Id: 1/10

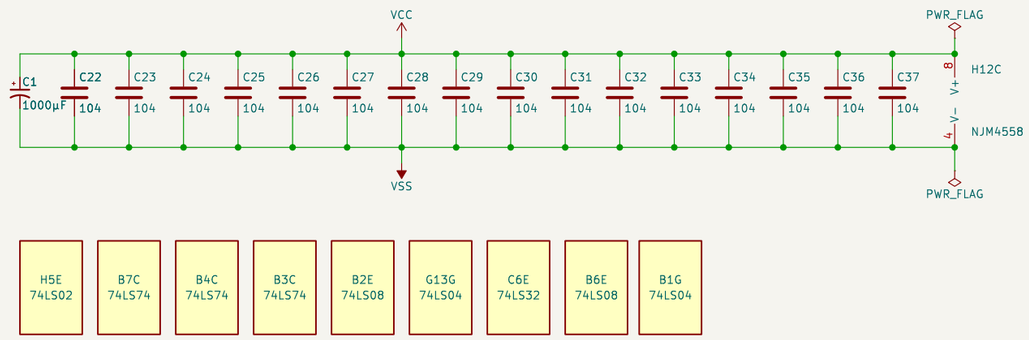

JOTEGO

Sheet: /capacitors/
File: capacitors.kicad_sch

Title: EXTERMINATION

Size: A3	Date: 29/08/2022	Rev: José Tejada G.
KiCad E.D.A. 8.0.9		Id: 2/10

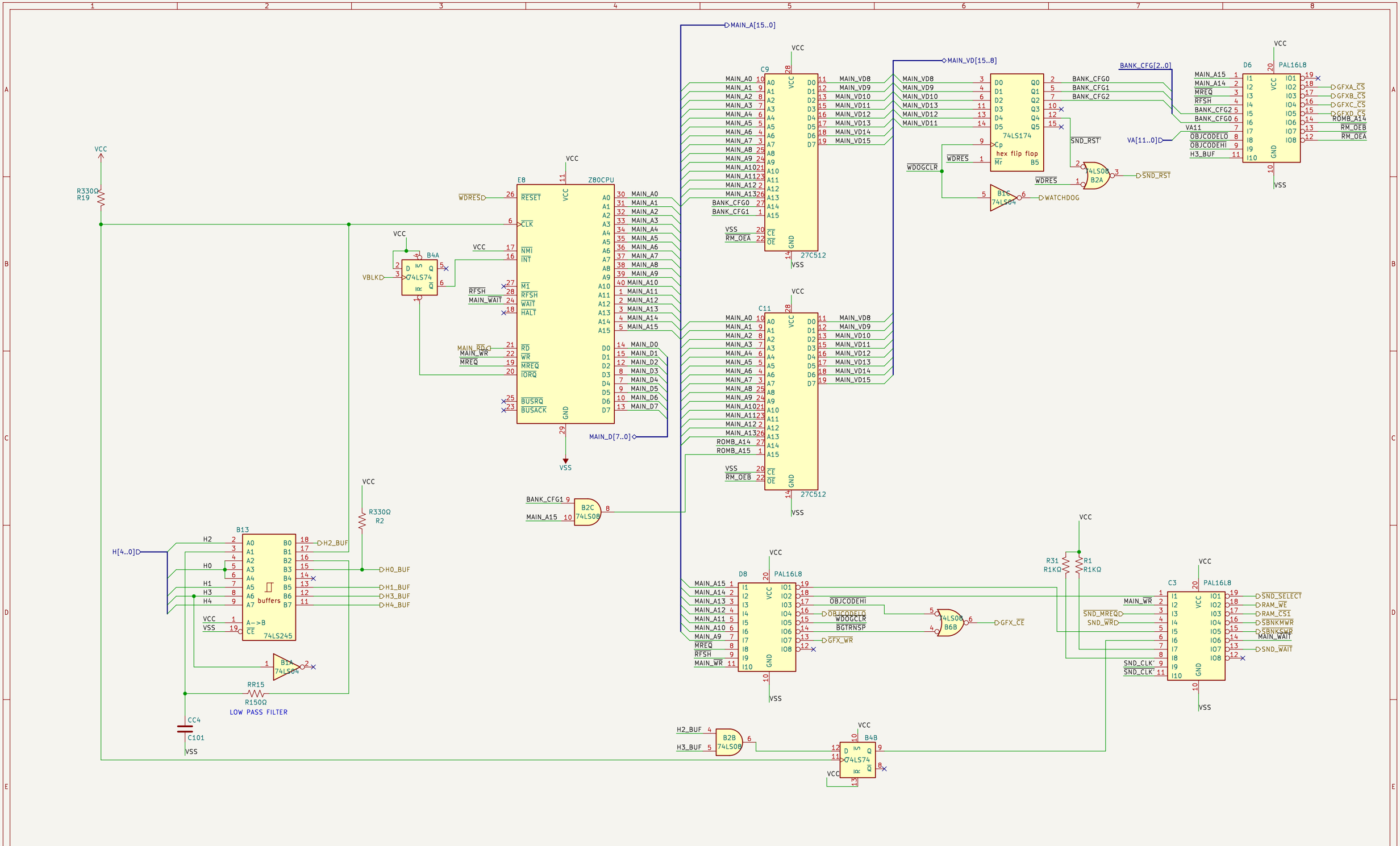

JOTEGO

Sheet: /main/

File: main.kicad_sch

Title: EXTERMINATION

Size: A3	Date: 29/08/2022	Rev: José Tejada G.
KiCad E.D.A. 8.0.9		Id: 3/10

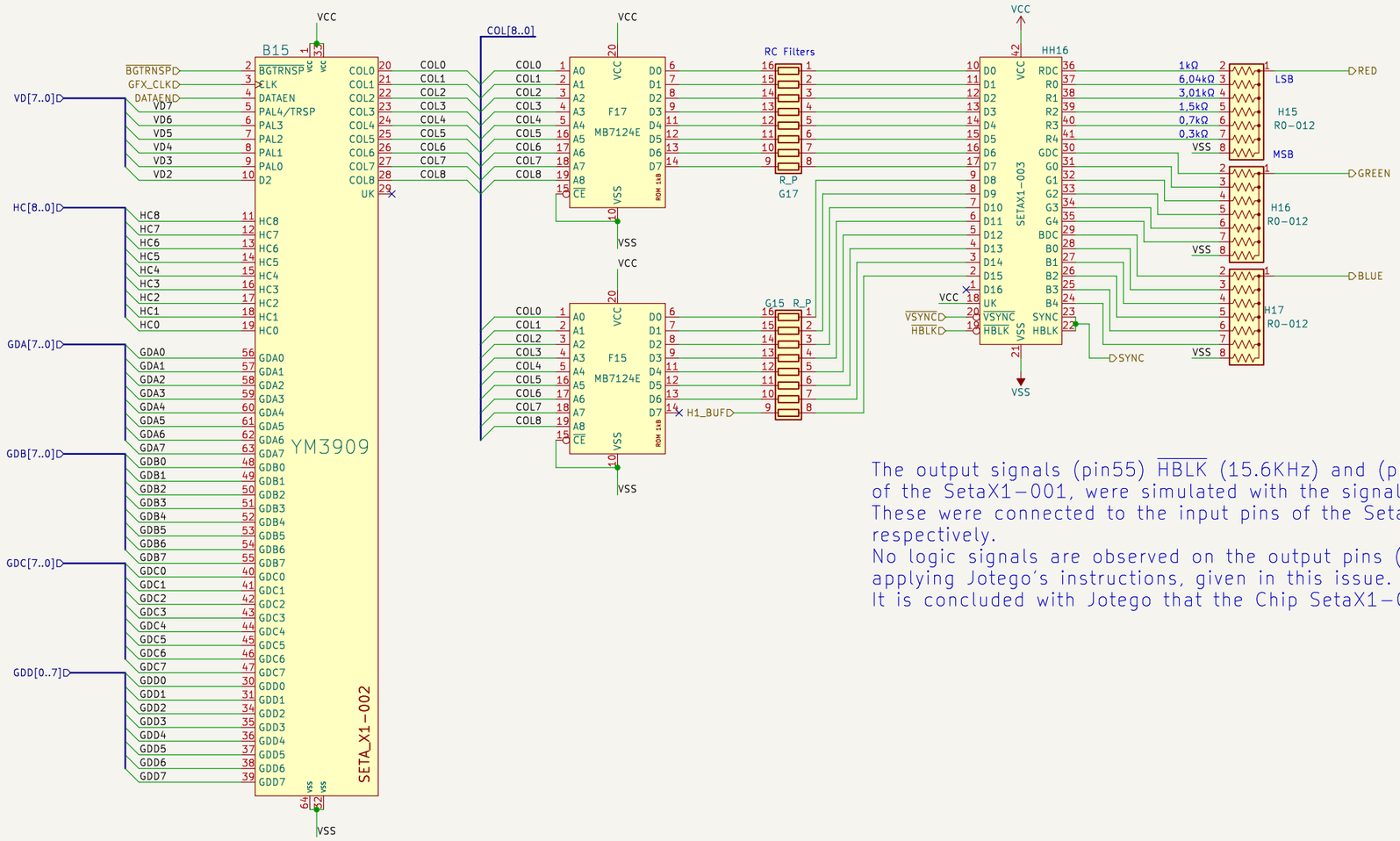

The output signals (pin55) $\overline{\text{HBLK}}$ (15.6KHz) and (pin56) $\overline{\text{VSYNC}}$ (59.2 Hz) of the SetaX1-001, were simulated with the signal generator and an inverter. These were connected to the input pins of the SetaX01-003 (pin 19 – 20), respectively.
No logic signals are observed on the output pins (22-23) HBLK – SYNC, applying Jotego's instructions, given in this issue.
It is concluded with Jotego that the Chip SetaX1-001 is broken.

JOTEGO

Sheet: /colmix/
File: colmix.kicad_sch

Title: EXTERMINATION

Size: A3	Date: 29/08/2022	Rev: José Tejada G.
KiCad E.D.A. 8.0.9		Id: 4/10

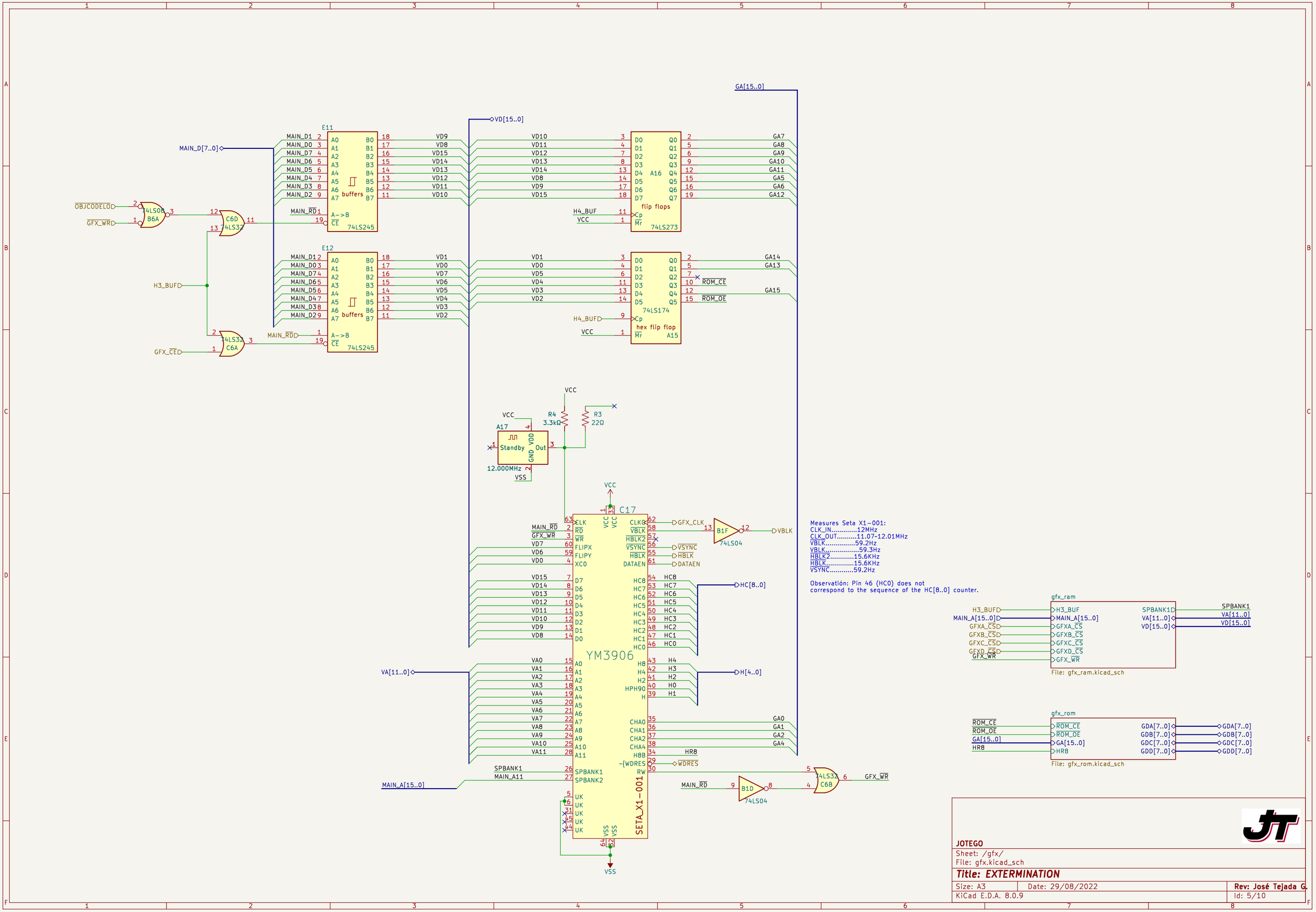
GA[15..0]
VD[15..0]
MAIN_D[7..0]
E11
74LS245
buffers
A->B
CE
E12
74LS245
OBJCODELO
GFX_WR
74LS08
B6A
C6D
74LS32
H3_BUF
GFX_CE
C6A
MAIN_RD
A16
74LS273
flip flops
H4_BUF
VCC
74LS174
hex flip flop
ROM_CE
ROM_OE
A17
Standby
12.000MHz
VSS
R4
3.3kΩ
R3
22Ω
C17
YM3906
SETA_X1-001
GFX_CLK
VBLK
VSYNC
HBLK
DATAEN
HC[8..0]
H[4..0]
VA[11..0]
MAIN_A[15..0]
SPBANK1
MAIN_A11
WDRES
B1F
74LS04
B1D
C6B
GFX_WR
Measures Seta X1-001:
CLK_IN.....12MHz
CLK_OUT.....11.07-12.01MHz
VBLK.....59.2Hz
VBLK.....59.3Hz
HBLK2.....15.6KHz
HBLK.....15.6KHz
VSYNC.....59.2Hz
Observatión: Pin 46 (HC0) does not
correspond to the sequence of the HC[8..0] counter.
gfx_ram
H3_BUF
MAIN_A[15..0]
GFXA_CS
GFXB_CS
GFXC_CS
GFXD_CS
GFX_WR
SPBANK1
VA[11..0]
VD[15..0]
File: gfx_ram.kicad_sch
gfx_rom
ROM_CE
ROM_OE
GA[15..0]
HR8
GDA[7..0]
GDB[7..0]
GDC[7..0]
GDD[7..0]
File: gfx_rom.kicad_sch
JOTEGO
Sheet: /gfx/
File: gfx.kicad_sch
Title: EXTERMINATION
Size: A3
Date: 29/08/2022
Rev: José Tejada G.
KiCad E.D.A. 8.0.9
Id: 5/10

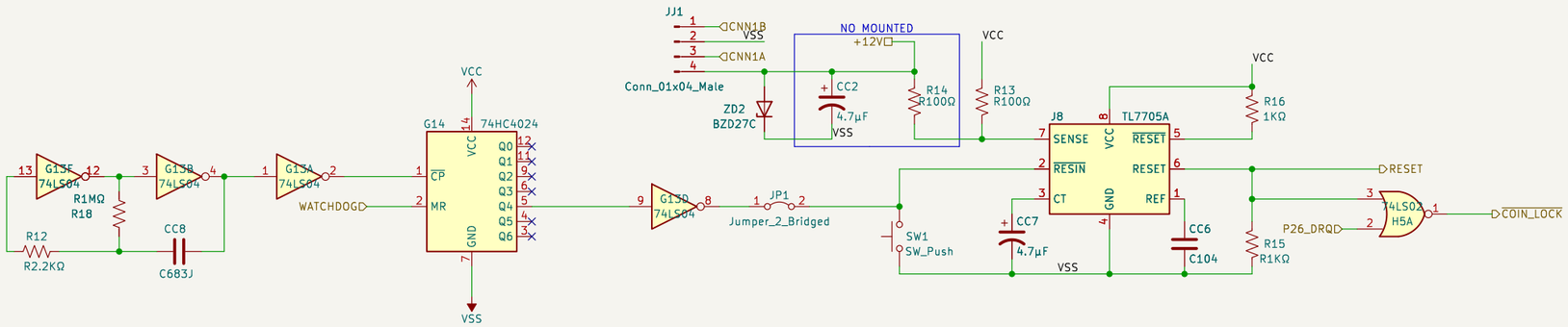

JOTEGO

Sheet: /watchdog/

File: watchdog.kicad_sch

Title: EXTERMINATION

Size: A3	Date: 29/08/2022	Rev: José Tejada G.
KiCad E.D.A. 8.0.9		Id: 6/10

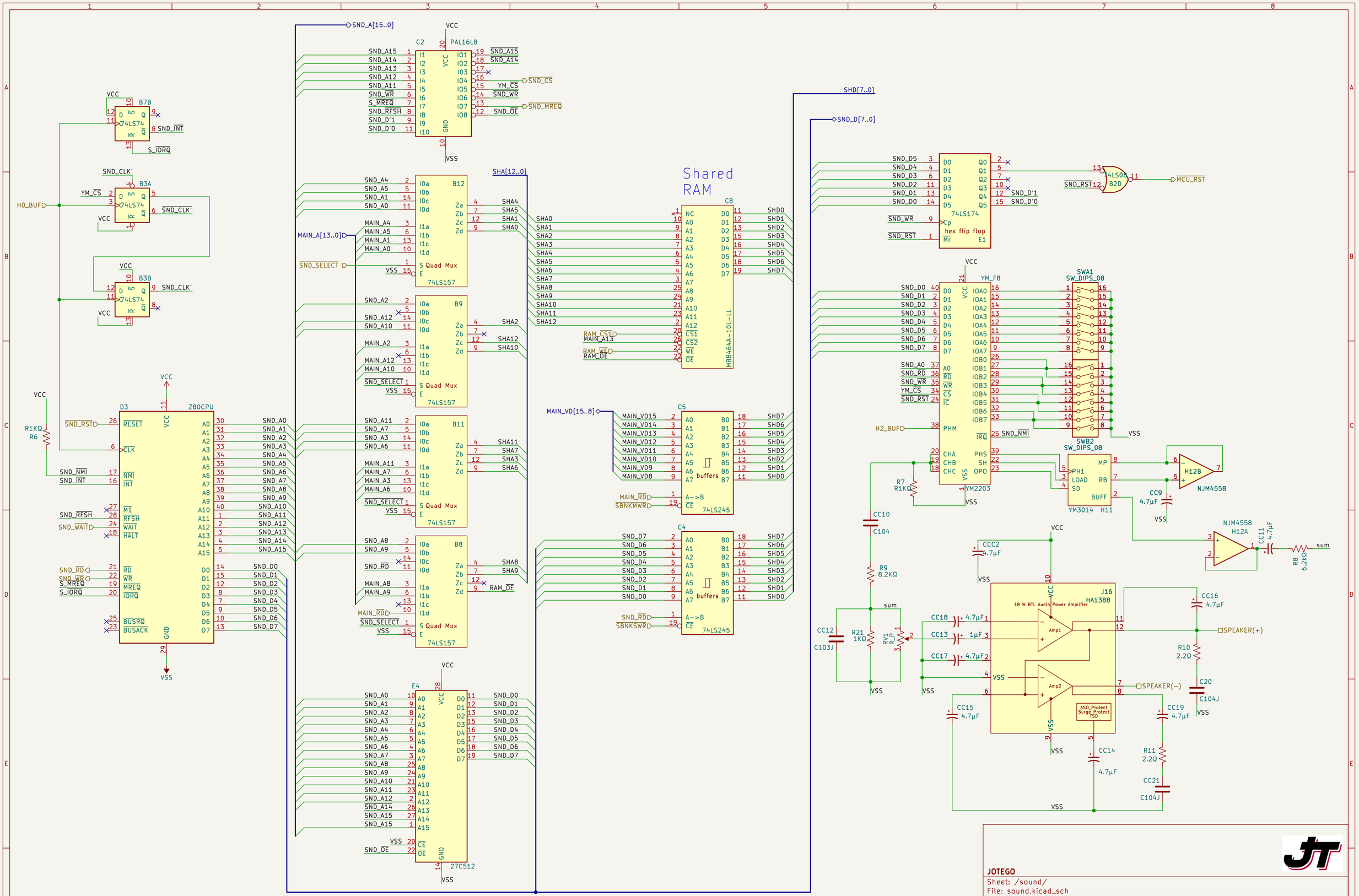

JOTEGO

Sheet: /sound/

File: sound.kicad_sch

Title: EXTERMINATION

Size: A3	Date: 29/08/2022	Rev: José Tejada G.
KiCad E.D.A. 8.0.9		Id: 7/10

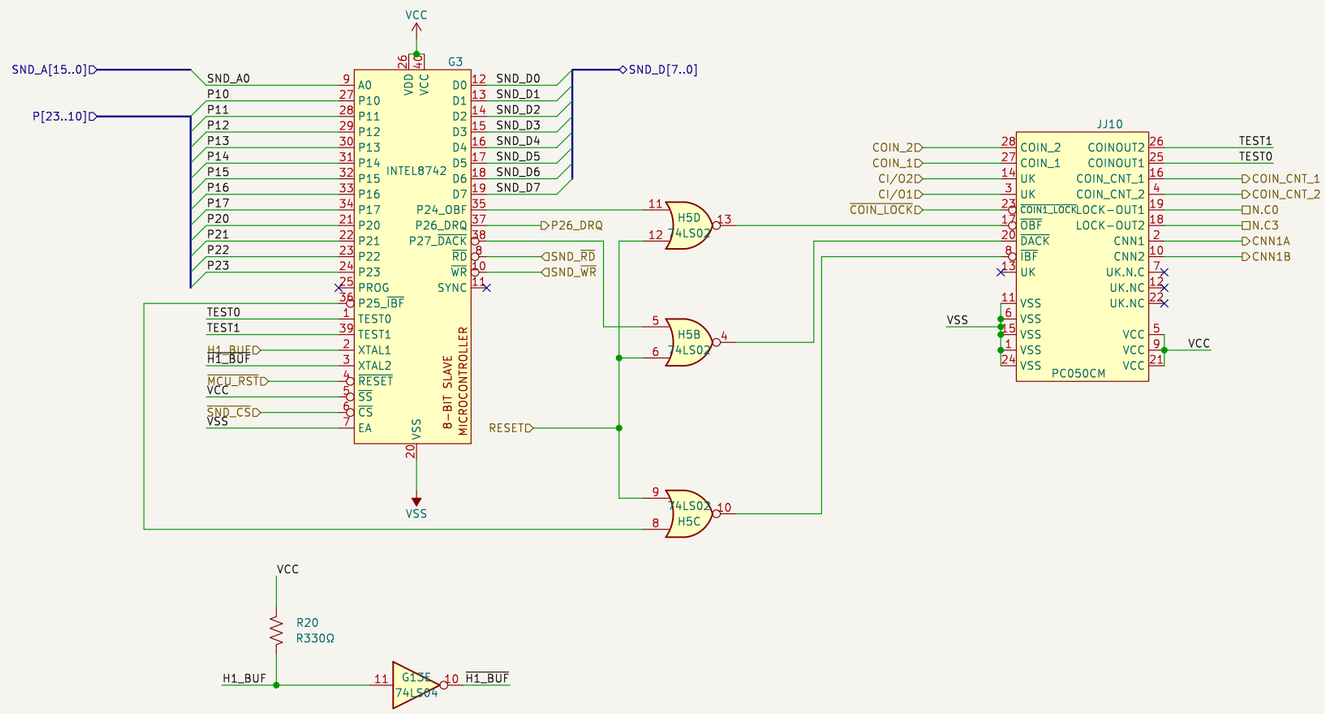

JOTEGO

Sheet: /mcu/

File: mcu.kicad_sch

Title: EXTERMINATION

Size: A3	Date: 29/08/2022	Rev: José Tejada G.
KiCad E.D.A. 8.0.9		Id: 8/10

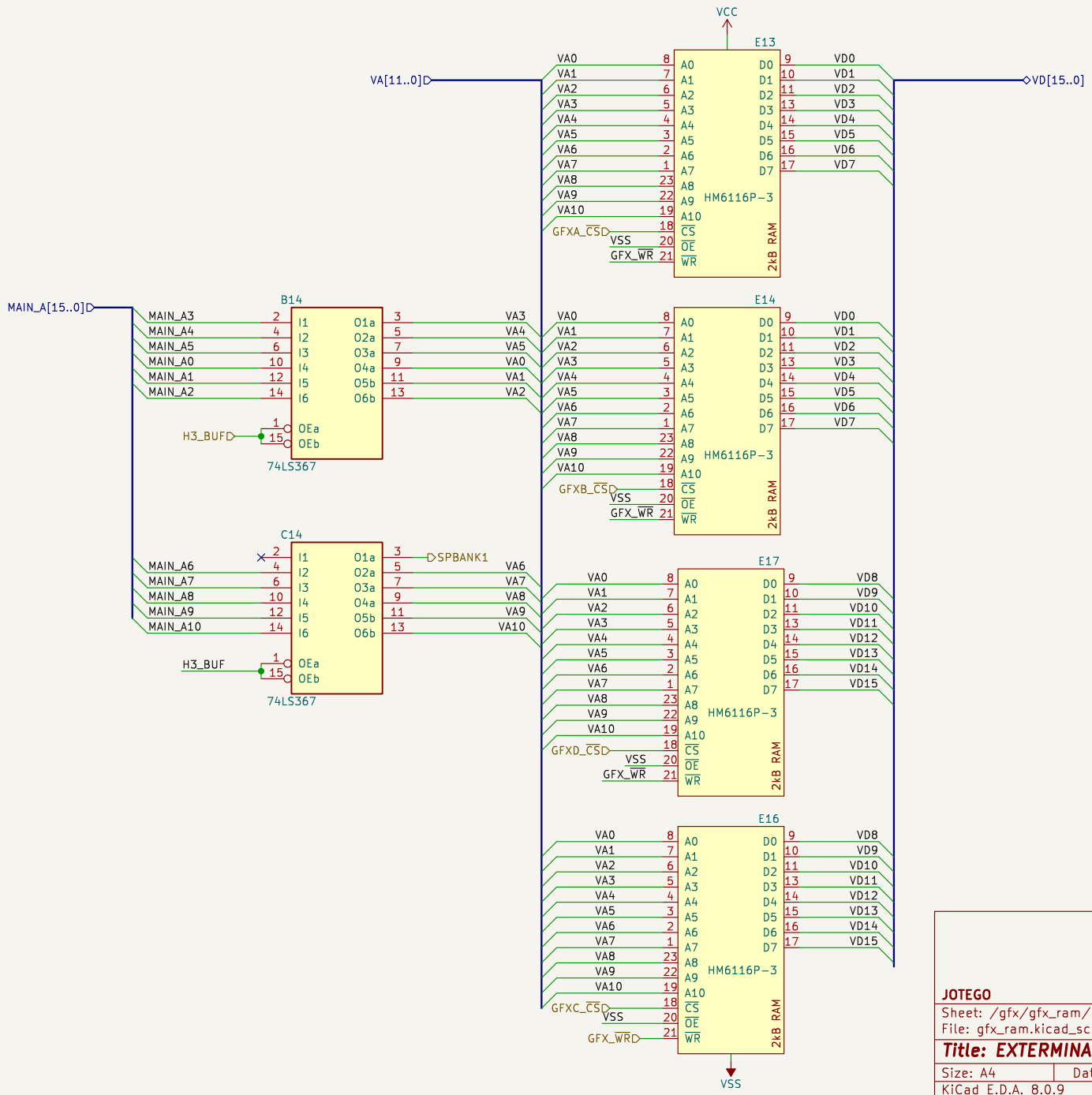

JOTEGO

Sheet: /gfx/gfx_ram/

File: gfx_ram.kicad_sch

Title: EXTERMINATION

Size: A4	Date: 29/08/2022	Rev: José Tejada G.
KiCad E.D.A. 8.0.9		Id: 9/10

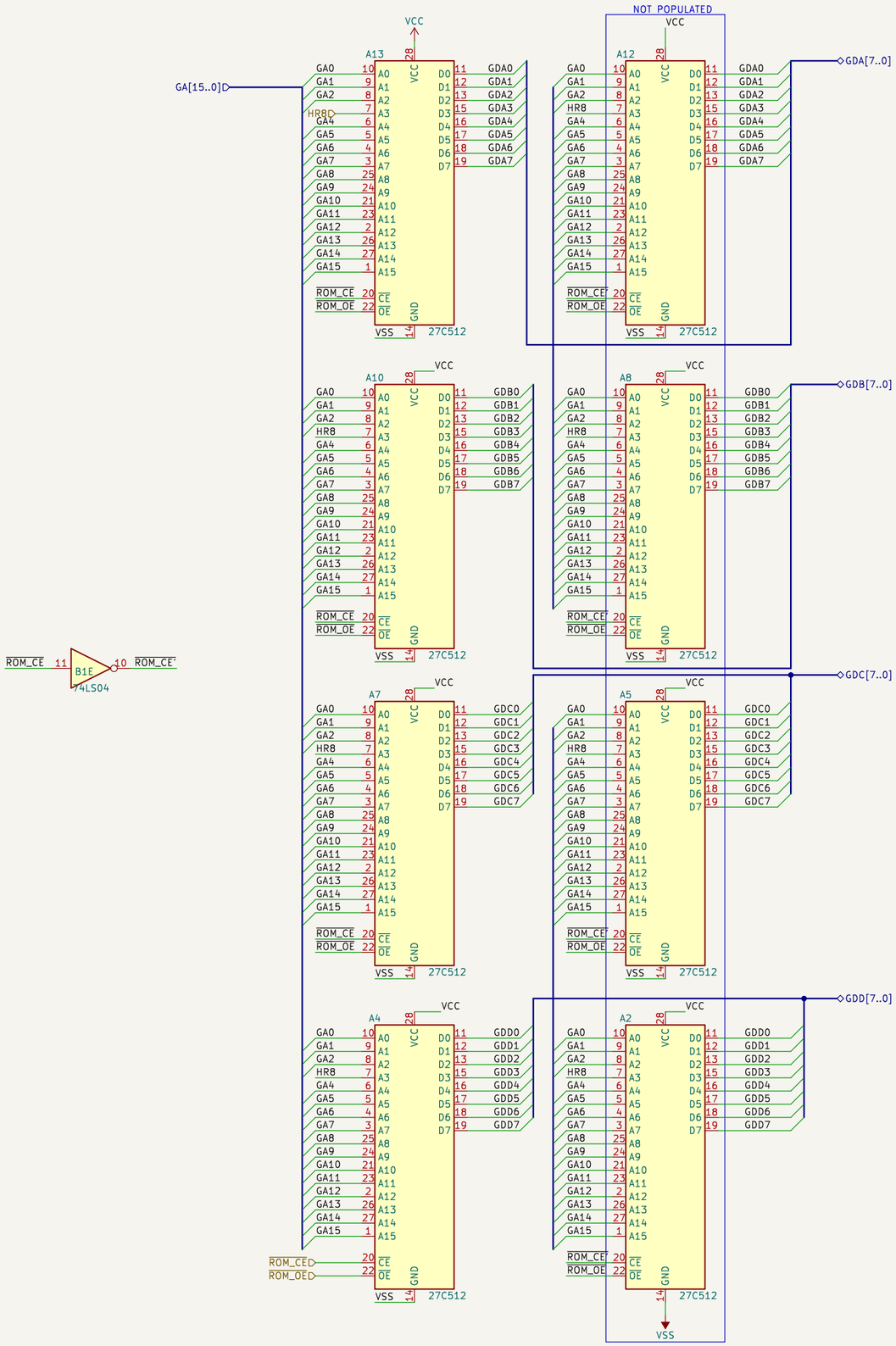

JOTEGO

Sheet: /gfx/gfx_rom/

File: gfx_rom.kicad_sch

Title: EXTERMINATION

Size: A3	Date: 29/08/2022	Rev: José Tejada G.
KiCad E.D.A. 8.0.9		Id: 10/10