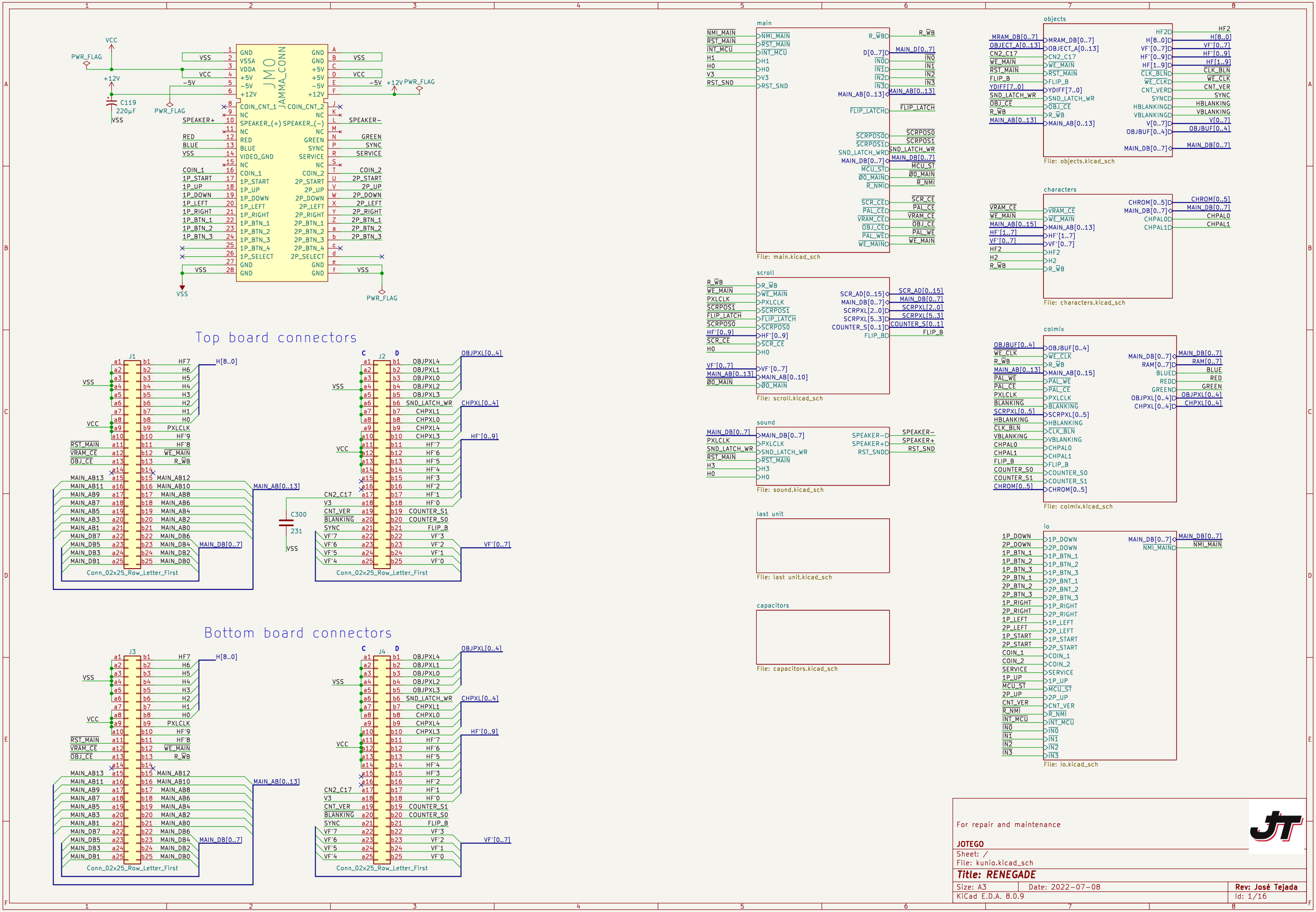
JMO
JAMMA_CONN
Top board connectors
Bottom board connectors
Conn_02x25_Row_Letter_First
main
File: main.kicad_sch
objects
File: objects.kicad_sch
characters
File: characters.kicad_sch
scroll
File: scroll.kicad_sch
colmix
File: colmix.kicad_sch
sound
File: sound.kicad_sch
last unit
File: last unit.kicad_sch
capacitors
File: capacitors.kicad_sch
io
File: io.kicad_sch
For repair and maintenance
JOTEGO
Sheet: /
File: kunio.kicad_sch
Title: RENEGADE
Size: A3
Date: 2022-07-08
Rev: José Tejada
KiCad E.D.A. 8.0.9
Id: 1/16

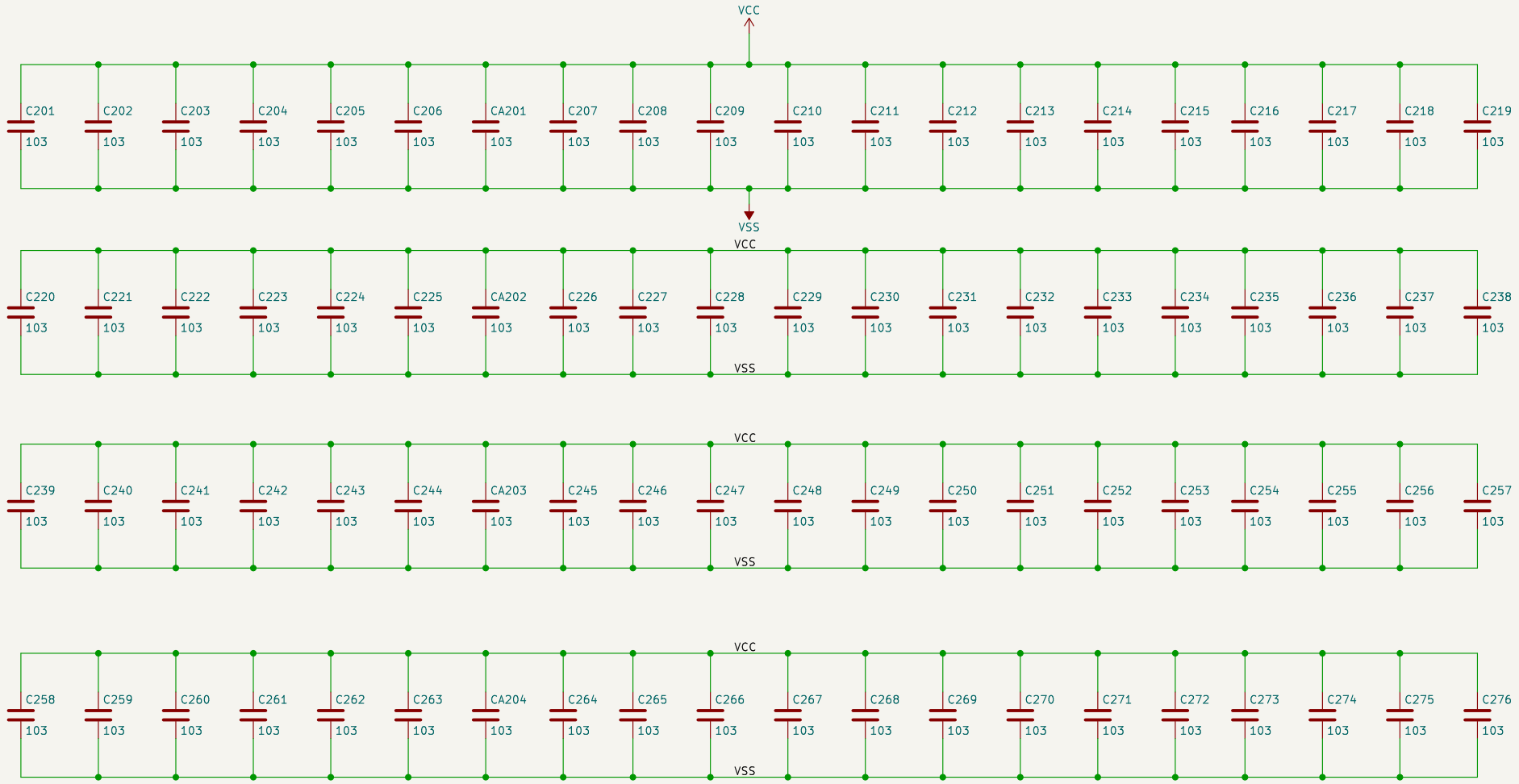

For repair and maintenance

JOTEGO

Sheet: /capacitors/
File: capacitors.kicad_sch

Title: RENEGADE

Size: A4	Date: 2022-07-08	**Rev: José Tejada**
KiCad E.D.A. 8.0.9		Id: 2/16

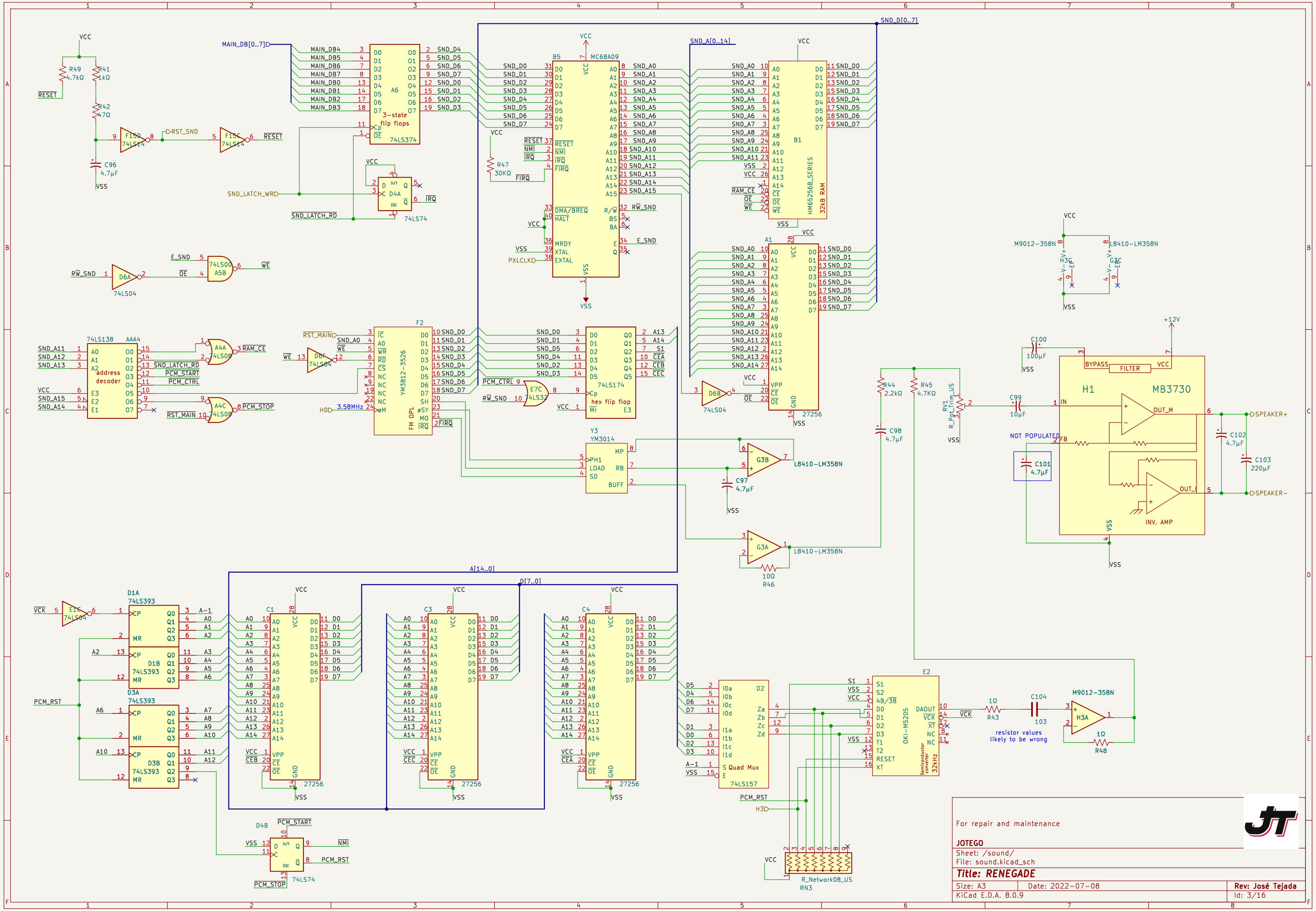

For repair and maintenance

JOTEGO

Sheet: /sound/
File: sound.kicad_sch

Title: RENEGADE

Size: A3	Date: 2022-07-08	Rev: José Tejada
KiCad E.D.A. 8.0.9		Id: 3/16

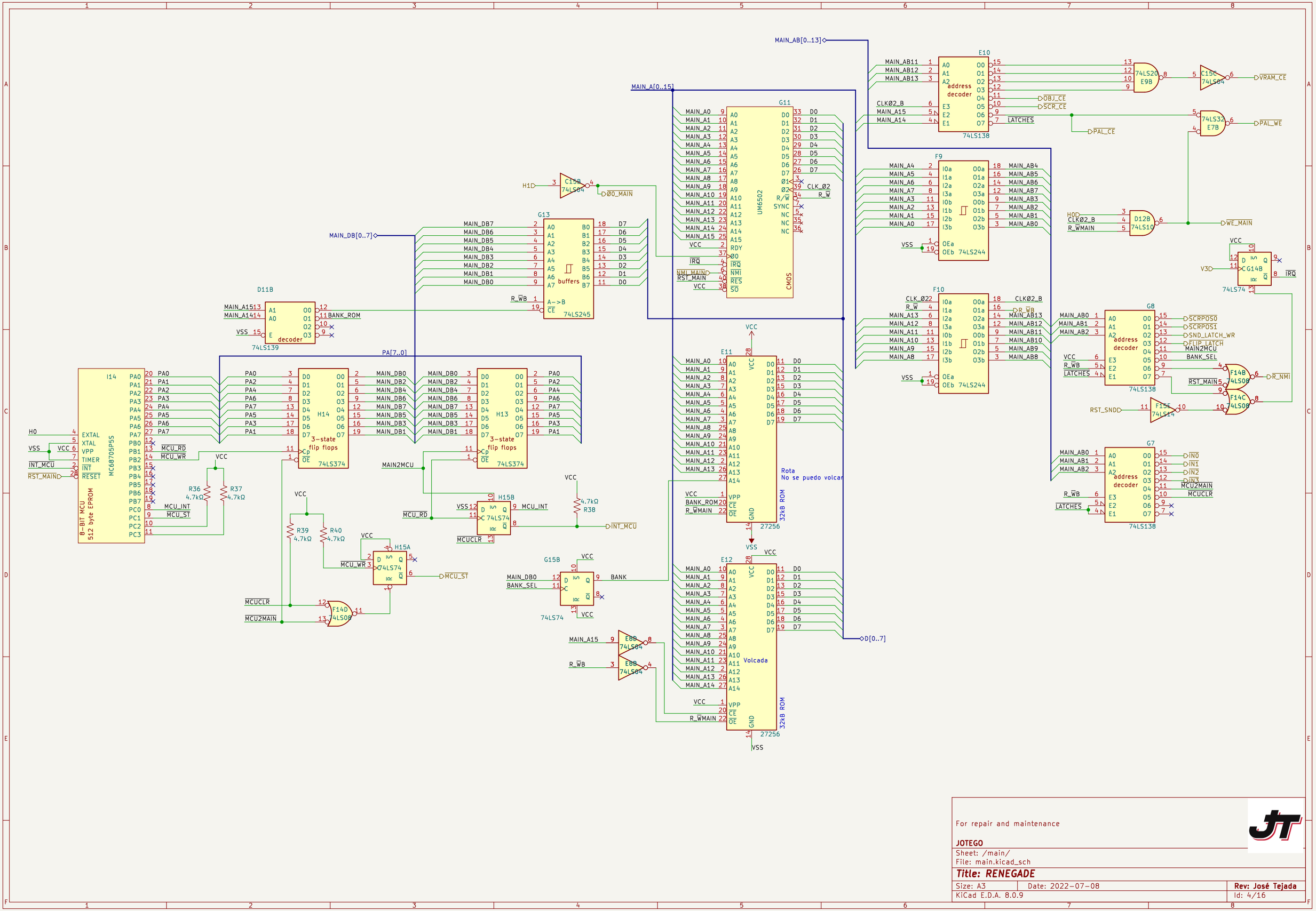

For repair and maintenance

JOTEGO

Sheet: /main/
File: main.kicad_sch

Title: RENEGADE

Size: A3	Date: 2022-07-08	**Rev: José Tejada**
KiCad E.D.A. 8.0.9		Id: 4/16

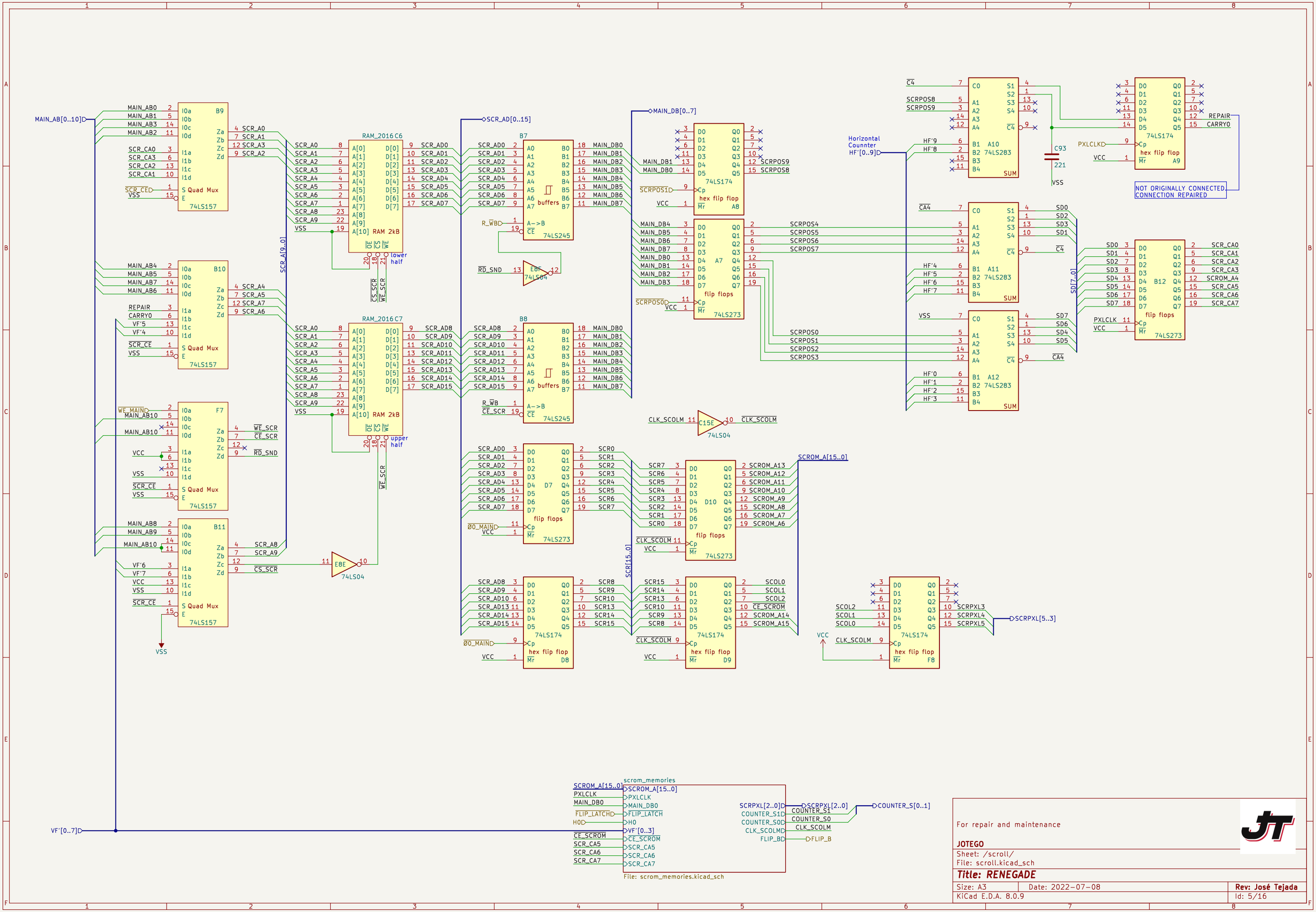

For repair and maintenance

JOTEGO

Sheet: /scroll/
File: scroll.kicad_sch

Title: RENEGADE

Size: A3	Date: 2022-07-08	Rev: José Tejada
KiCad E.D.A. 8.0.9		Id: 5/16

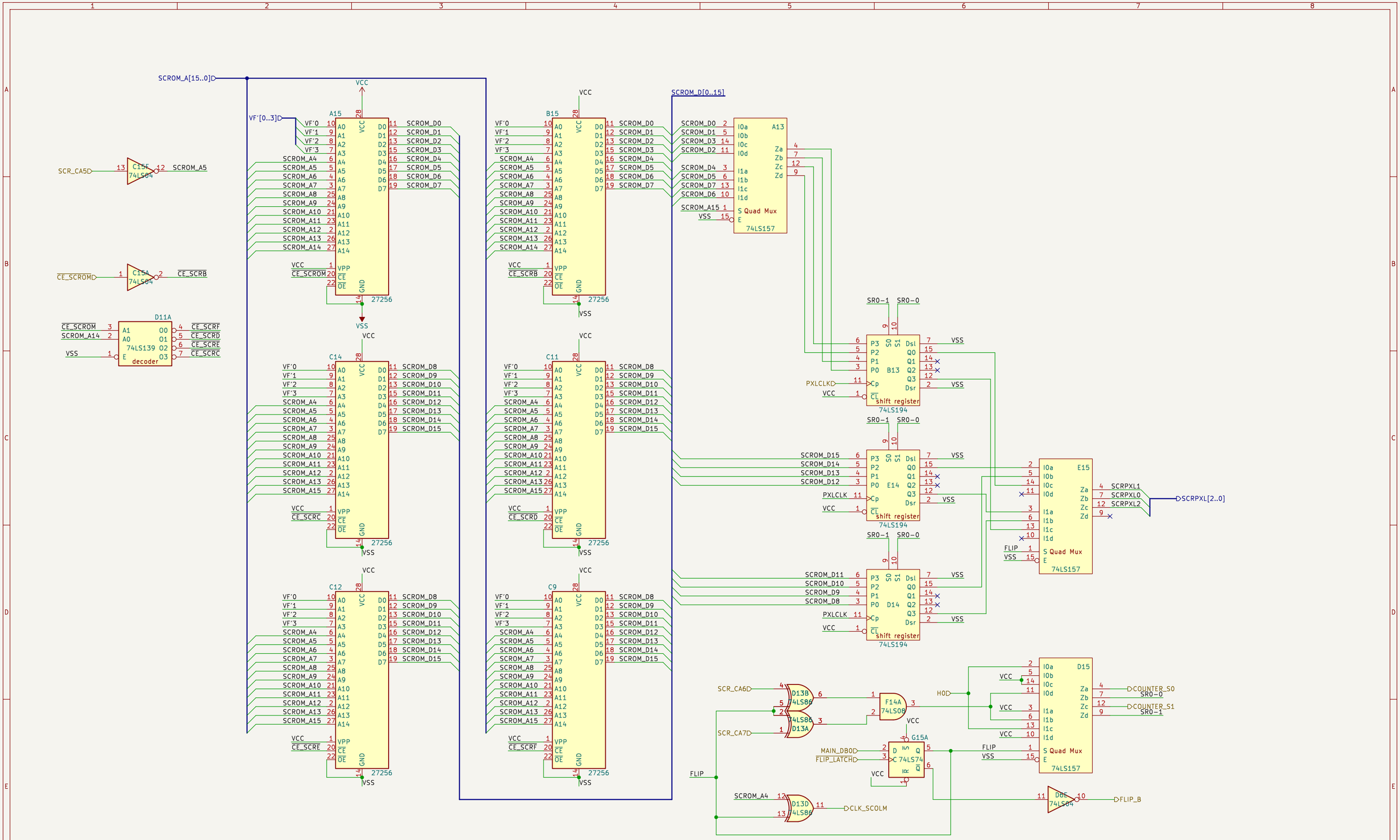

For repair and maintenance

JOTEGO

Sheet: /scroll/scrom_memories/
File: scrom_memories.kicad_sch

Title: RENEGADE

Size: A3	Date: 2022-07-08	Rev: José Tejada
KiCad E.D.A. 8.0.9		Id: 6/16

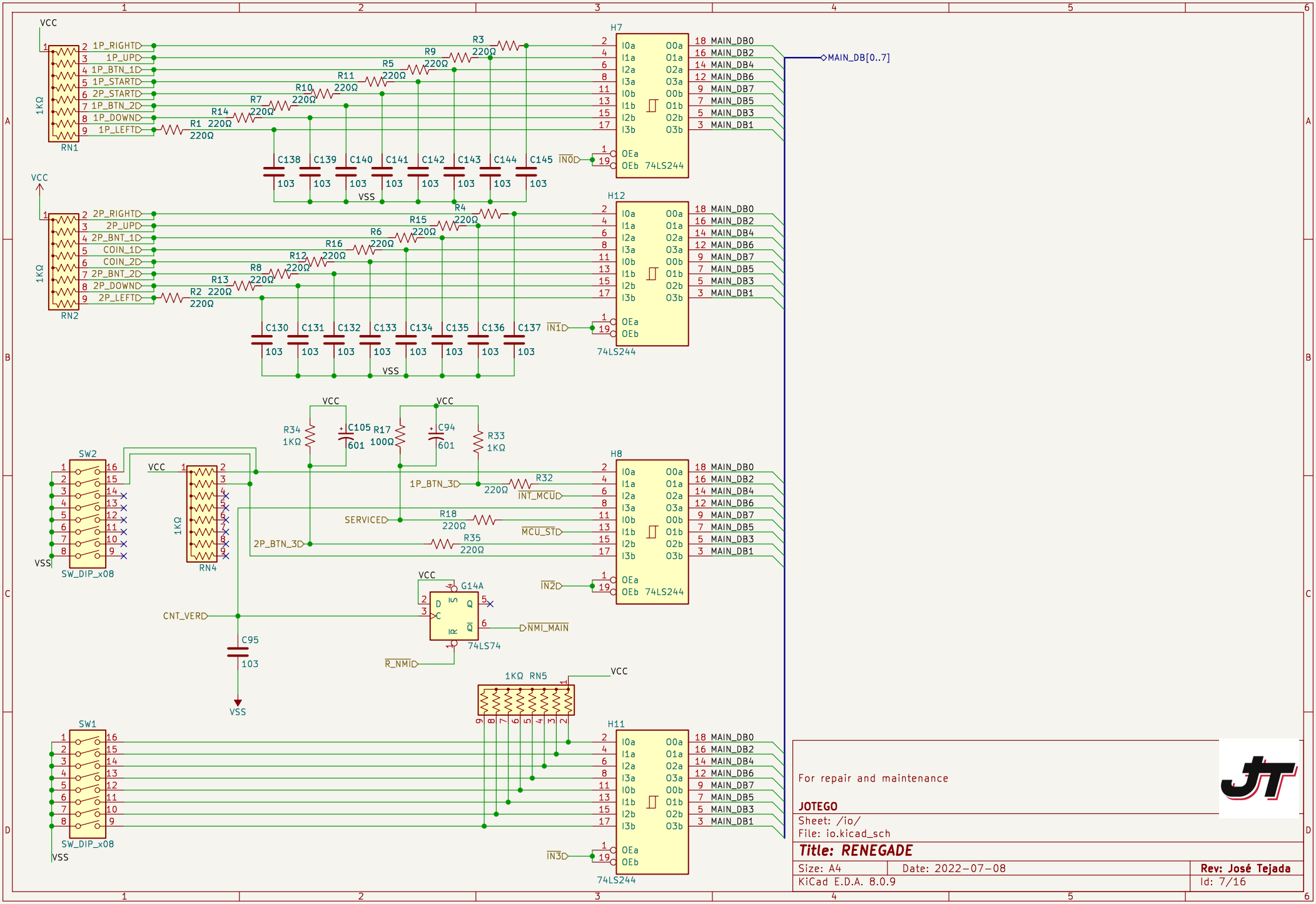
VCC
RN1
1KΩ
1P_RIGHT
1P_UP
1P_BTN_1
1P_START
2P_START
1P_BTN_2
1P_DOWN
1P_LEFT
R1 220Ω
R2 220Ω
R3 220Ω
R4 220Ω
R5 220Ω
R6 220Ω
R7 220Ω
R8 220Ω
R9 220Ω
R10 220Ω
R11 220Ω
R12 220Ω
R13 220Ω
R14 220Ω
R15 220Ω
R16 220Ω
C138 C139 C140 C141 C142 C143 C144 C145
C130 C131 C132 C133 C134 C135 C136 C137
103
VSS
IN0
IN1
H7
H12
74LS244
MAIN_DB[0..7]
MAIN_DB0
MAIN_DB2
MAIN_DB4
MAIN_DB6
MAIN_DB7
MAIN_DB5
MAIN_DB3
MAIN_DB1
RN2
2P_RIGHT
2P_UP
2P_BNT_1
COIN_1
COIN_2
2P_BNT_2
2P_DOWN
2P_LEFT
R34 1KΩ
C105 601
R17 100Ω
C94 601
R33 1KΩ
SW2
SW_DIP_x08
RN4
1P_BTN_3
2P_BTN_3
SERVICE
R32 220Ω
R18 220Ω
R35 220Ω
INT_MCU
MCU_ST
H8
IN2
G14A
74LS74
CNT_VER
C95
R_NMI
NMI_MAIN
1KΩ RN5
SW1
H11
IN3
For repair and maintenance
JOTEGO
Sheet: /io/
File: io.kicad_sch
Title: RENEGADE
Size: A4
Date: 2022-07-08
Rev: José Tejada
KiCad E.D.A. 8.0.9
Id: 7/16

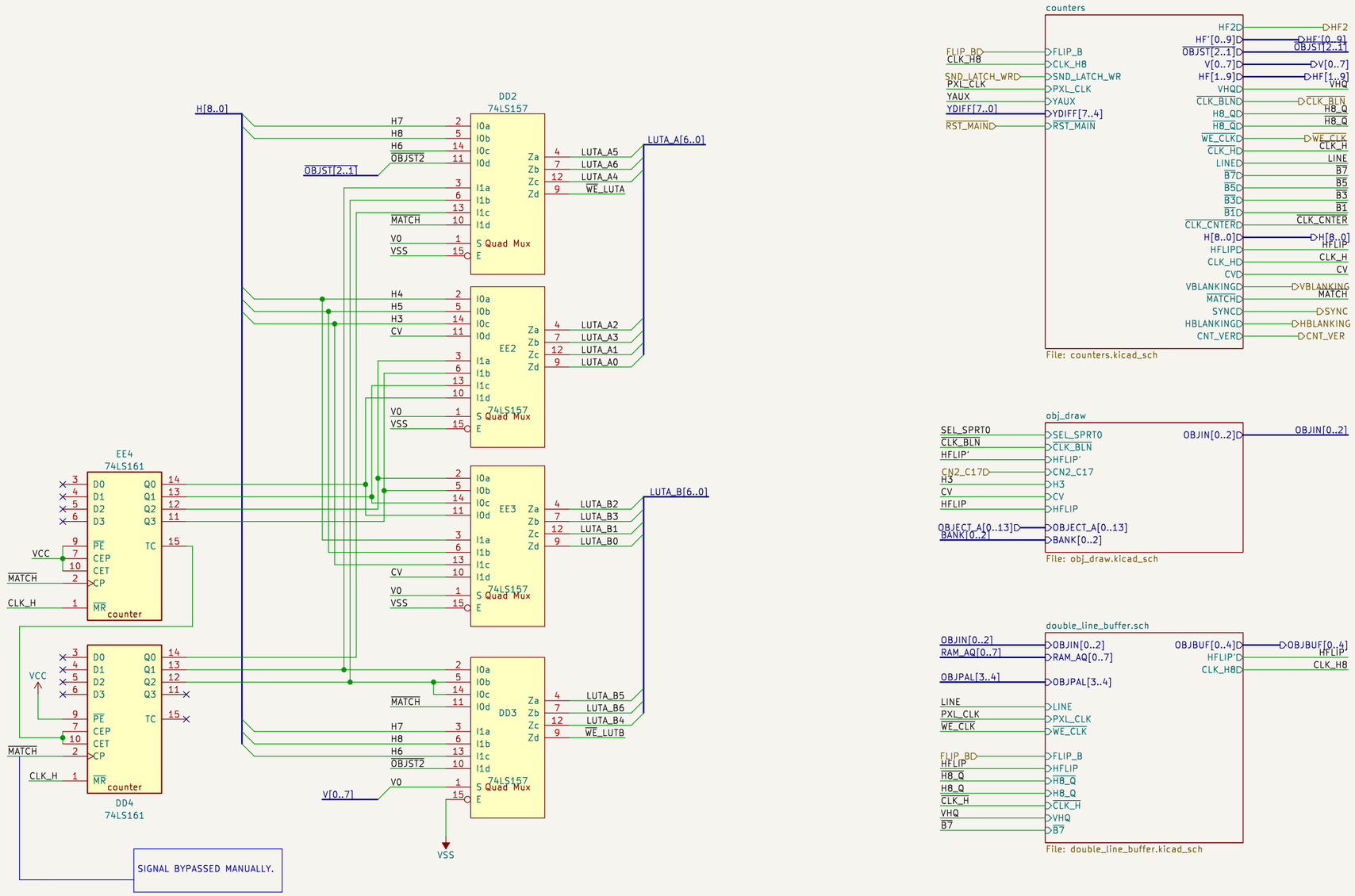

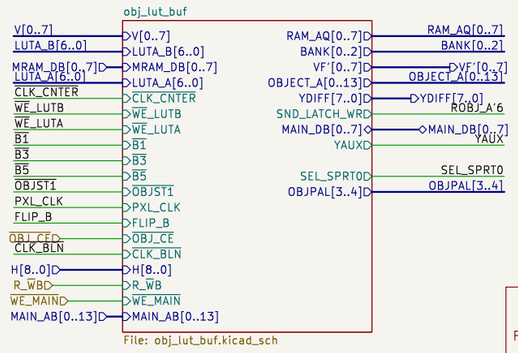

For repair and maintenance

JOTEGO

Sheet: /objects/
File: objects.kicad_sch

Title: RENEGADE

Size: A3	Date: 2022-07-08	**Rev: José Tejada**
KiCad E.D.A. 8.0.9		Id: 8/16

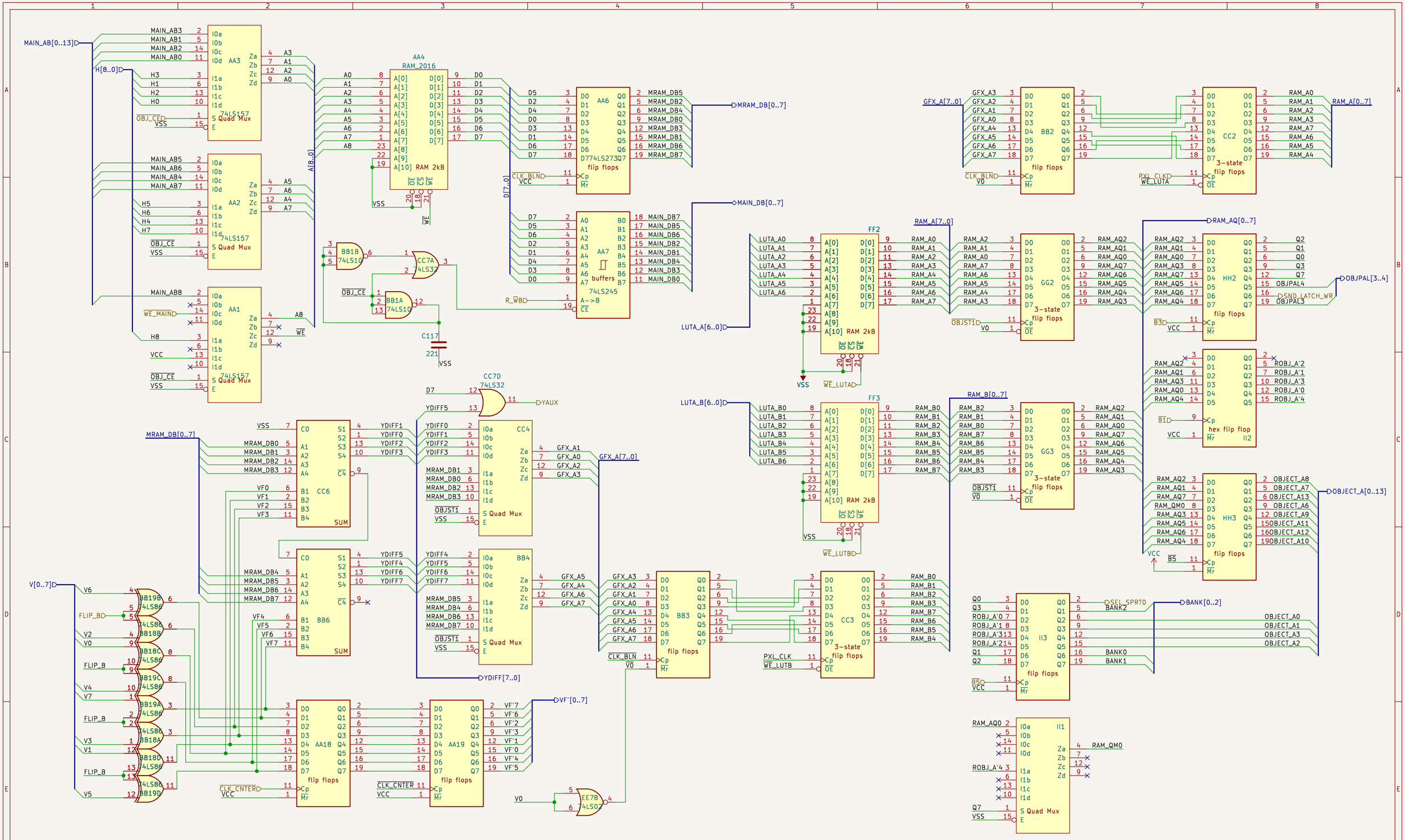

For repair and maintenance

JOTEGO

Sheet: /objects/obj_lut_buf/
File: obj_lut_buf.kicad_sch

Title: RENEGADE

Size: A3	Date: 2022-07-08	Rev: José Tejada
KiCad E.D.A. 8.0.9		Id: 9/16

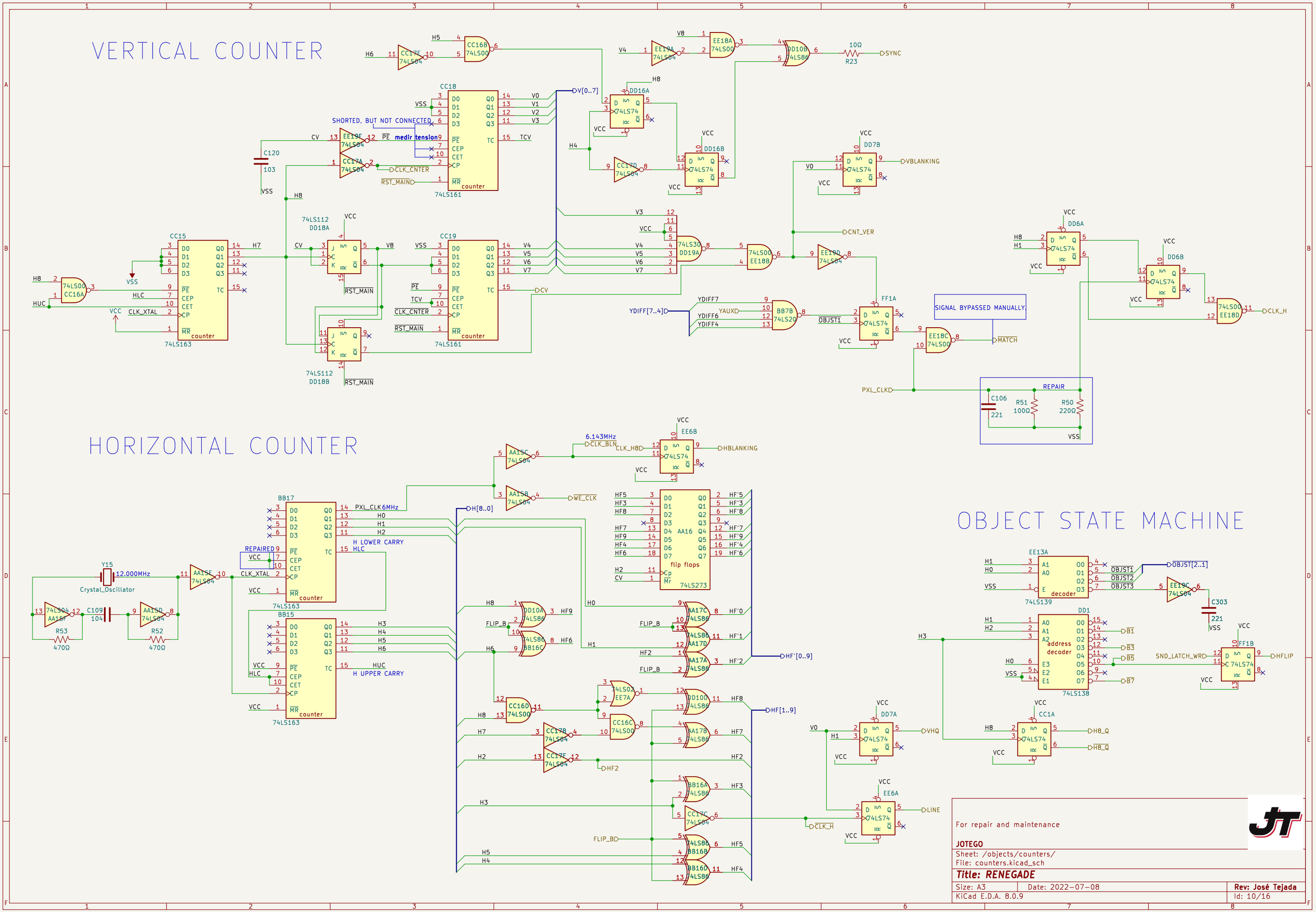
VERTICAL COUNTER
HORIZONTAL COUNTER
OBJECT STATE MACHINE
CC15
74LS163
CC18
74LS161
CC19
74LS161
BB17
BB15
AA16
flip flops
74LS273
EE13A
74LS139
DD1
74LS138
SHORTED, BUT NOT CONNECTED
medir tension
SIGNAL BYPASSED MANUALLY.
REPAIR
Crystal_Oscillator
12.000MHz
6.143MHz
SYNC
VBLANKING
HBLANKING
CNT_VER
MATCH
CLK_H
LINE
VHQ
HFLIP
H8_Q
OBJST[2..1]
For repair and maintenance
JOTEGO
Sheet: /objects/counters/
File: counters.kicad_sch
Title: RENEGADE
Size: A3
Date: 2022-07-08
Rev: José Tejada
KiCad E.D.A. 8.0.9
Id: 10/16

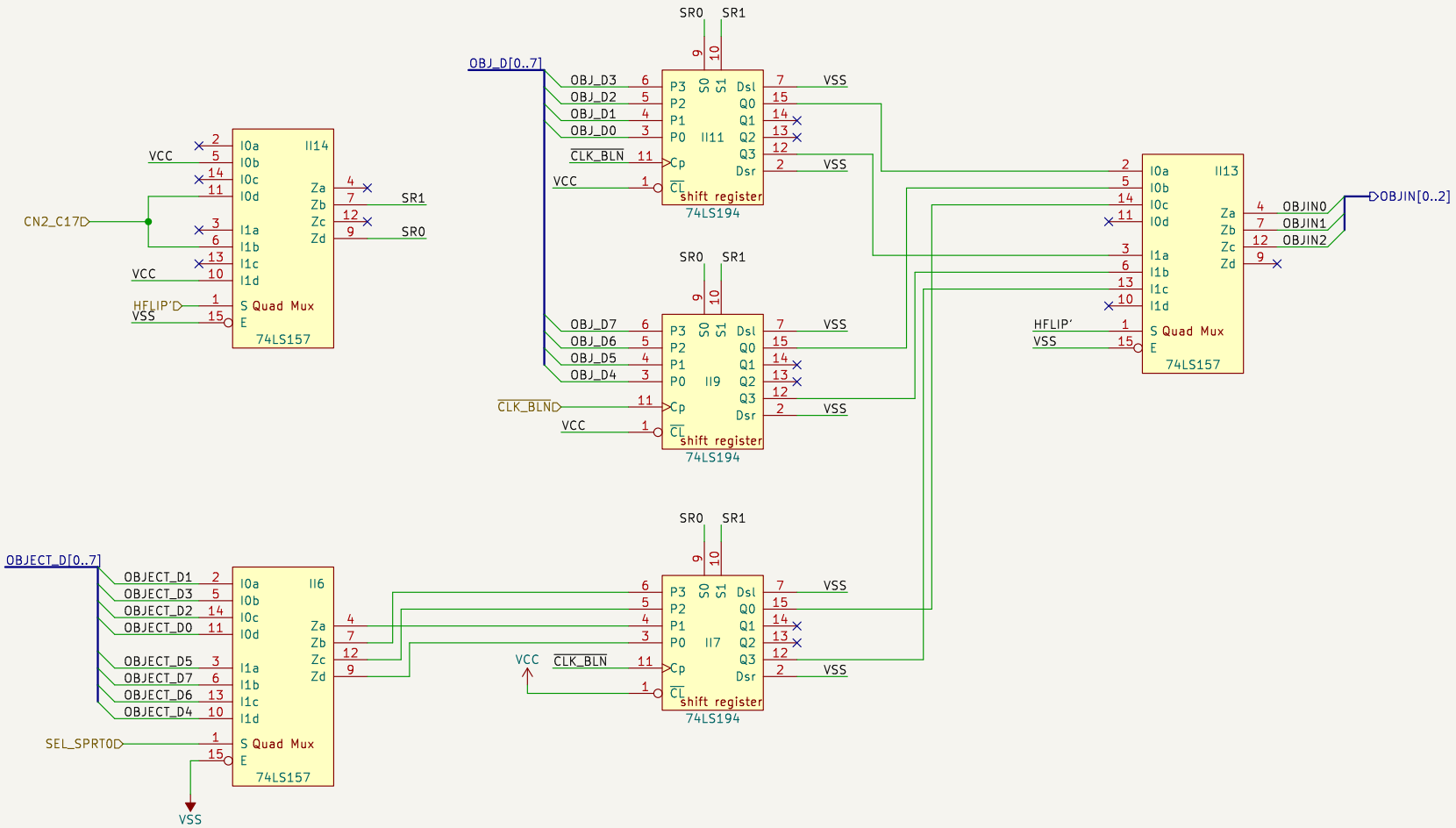

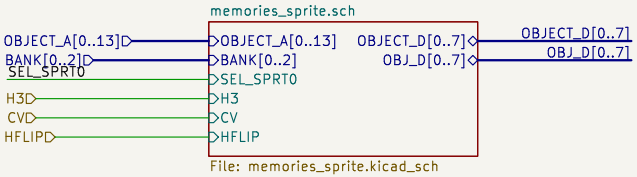

For repair and maintenance

JOTEGO

Sheet: /objects/obj_draw/
File: obj_draw.kicad_sch

Title: RENEGADE

Size: A4	Date: 2022-07-08	**Rev: José Tejada**
KiCad E.D.A. 8.0.9		Id: 11/16

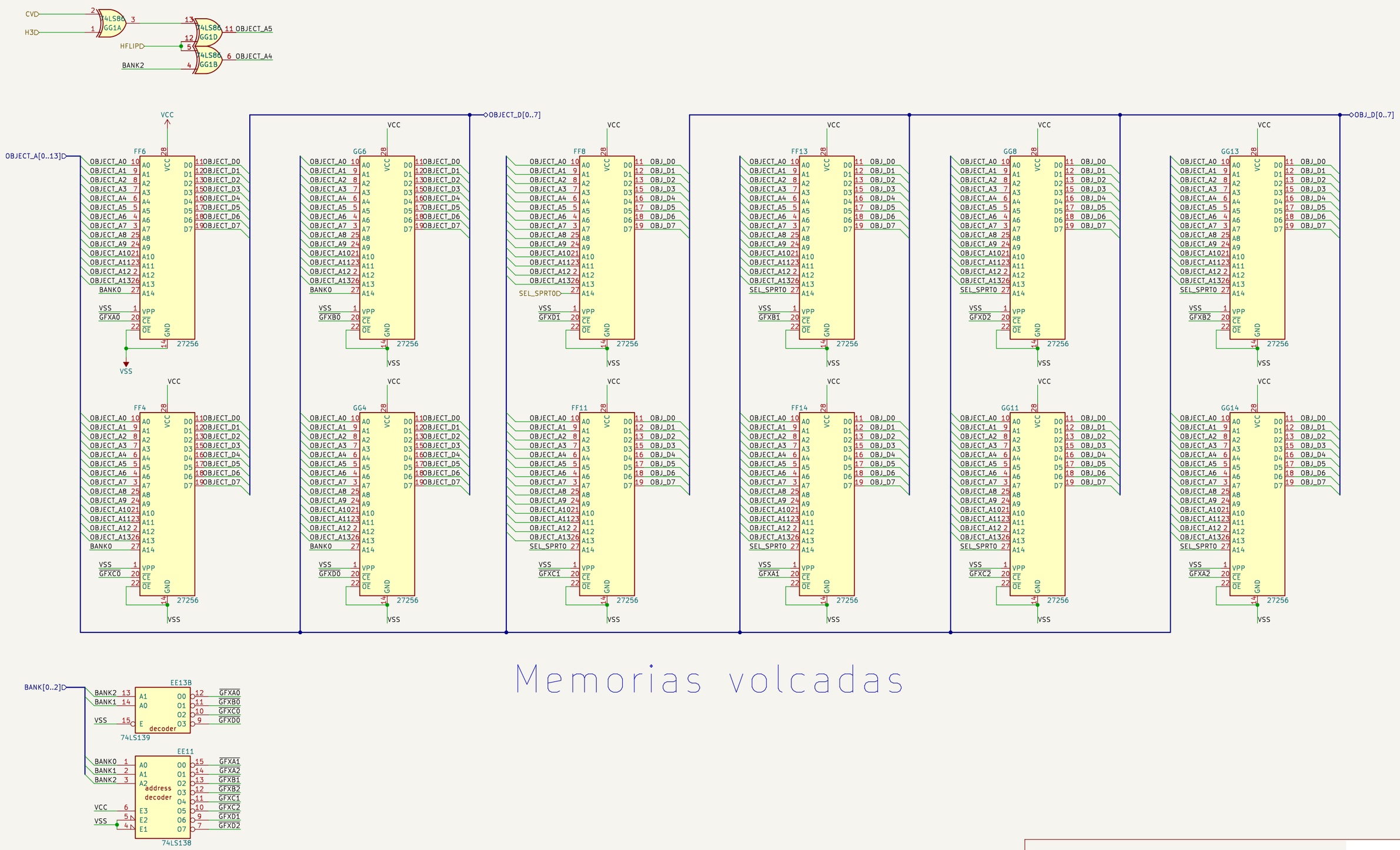

For repair and maintenance

JOTEGO

Sheet: /objects/obj_draw/memories_sprite.sch/
File: memories_sprite.kicad_sch

Title: RENEGADE

Size: A3	Date: 2022-07-08	**Rev: José Tejada**
KiCad E.D.A. 8.0.9		Id: 12/16

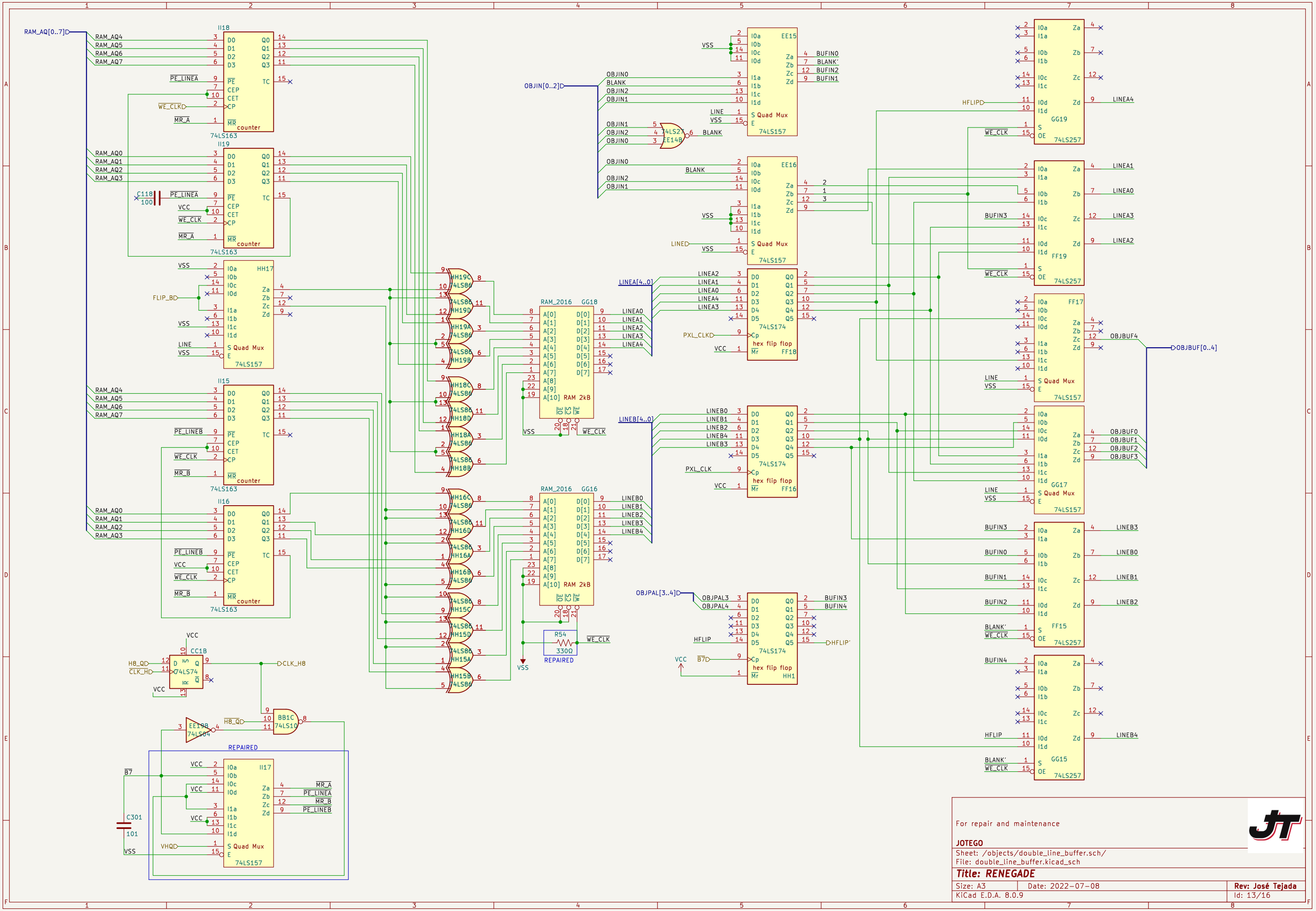

For repair and maintenance

JOTEGO

Sheet: /objects/double_line_buffer.sch/
File: double_line_buffer.kicad_sch

Title: RENEGADE

Size: A3	Date: 2022-07-08	Rev: José Tejada
KiCad E.D.A. 8.0.9		Id: 13/16

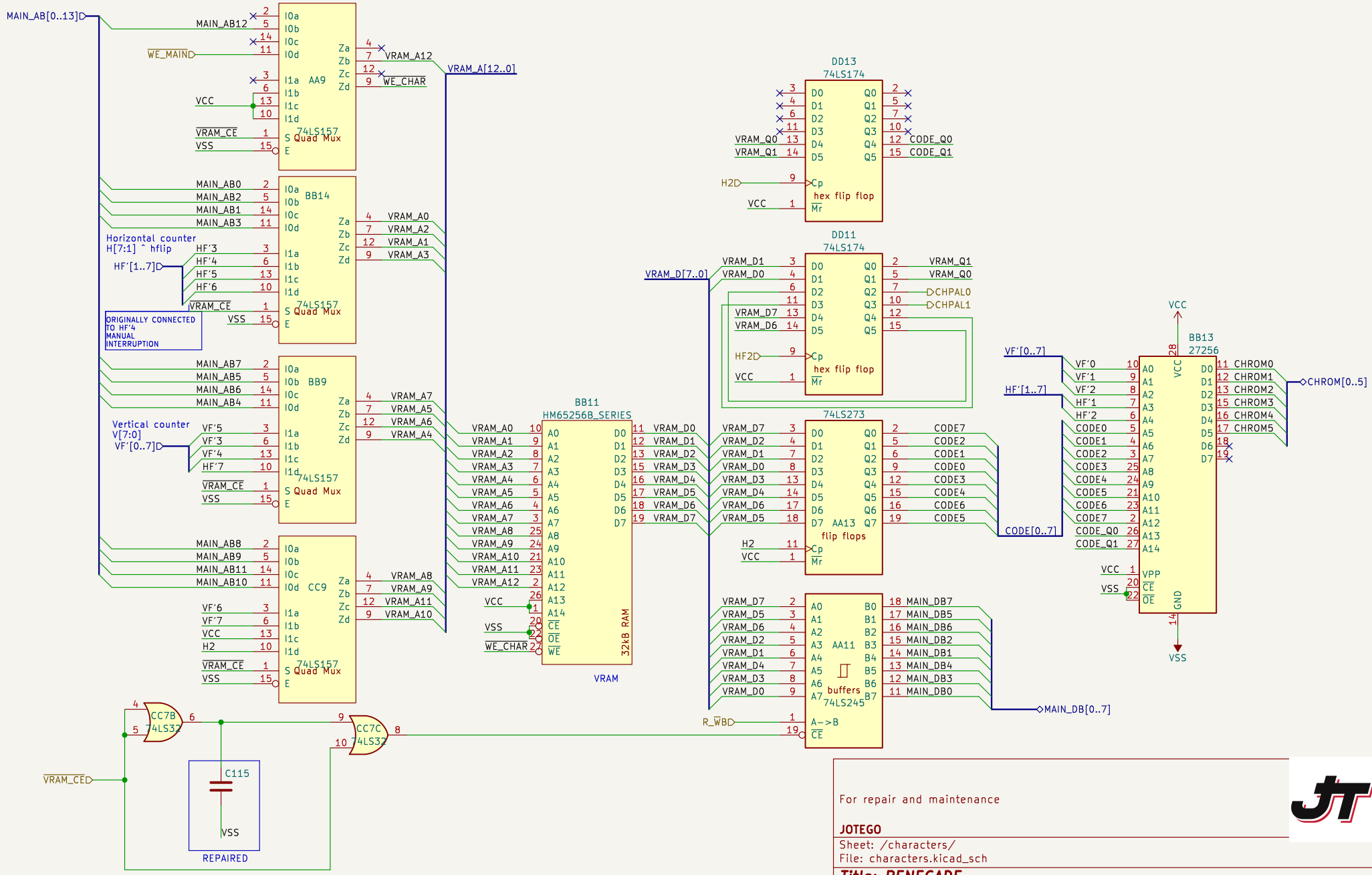
MAIN_AB[0..13]
MAIN_AB12
WE_MAIN
VCC
VRAM_CE
VSS
AA9
74LS157
S Quad Mux
VRAM_A12
WE_CHAR
VRAM_A[12..0]
MAIN_AB0
MAIN_AB2
MAIN_AB1
MAIN_AB3
Horizontal counter
H[7:1] ^ hflip
HF'[1..7]
HF'3
HF'4
HF'5
HF'6
BB14
VRAM_A0
VRAM_A2
VRAM_A1
VRAM_A3
ORIGINALLY CONNECTED
TO HF'4
MANUAL
INTERRUPTION
MAIN_AB7
MAIN_AB5
MAIN_AB6
MAIN_AB4
Vertical counter
V[7:0]
VF'[0..7]
VF'5
VF'3
VF'4
HF'7
BB9
VRAM_A7
VRAM_A5
VRAM_A6
VRAM_A4
MAIN_AB8
MAIN_AB9
MAIN_AB11
MAIN_AB10
VF'6
VF'7
H2
CC9
VRAM_A8
VRAM_A9
VRAM_A11
VRAM_A10
BB11
HM65256B_SERIES
32kB RAM
VRAM
VRAM_D[7..0]
DD13
74LS174
hex flip flop
VRAM_Q0
VRAM_Q1
CODE_Q0
CODE_Q1
DD11
CHPAL0
CHPAL1
74LS273
flip flops
CODE7
CODE2
CODE1
CODE0
CODE3
CODE4
CODE6
CODE5
AA13
AA11
buffers
74LS245
A->B
R_WB
MAIN_DB7
MAIN_DB5
MAIN_DB6
MAIN_DB2
MAIN_DB1
MAIN_DB4
MAIN_DB3
MAIN_DB0
MAIN_DB[0..7]
BB13
27256
VF'0..7
HF'[1..7]
CODE[0..7]
CHROM0
CHROM1
CHROM2
CHROM3
CHROM4
CHROM5
CHROM[0..5]
CC7B
74LS32
CC7C
C115
REPAIRED
For repair and maintenance
JOTEGO
Sheet: /characters/
File: characters.kicad_sch
Title: RENEGADE
Size: A4
Date: 2022-07-08
Rev: José Tejada
KiCad E.D.A. 8.0.9
Id: 14/16

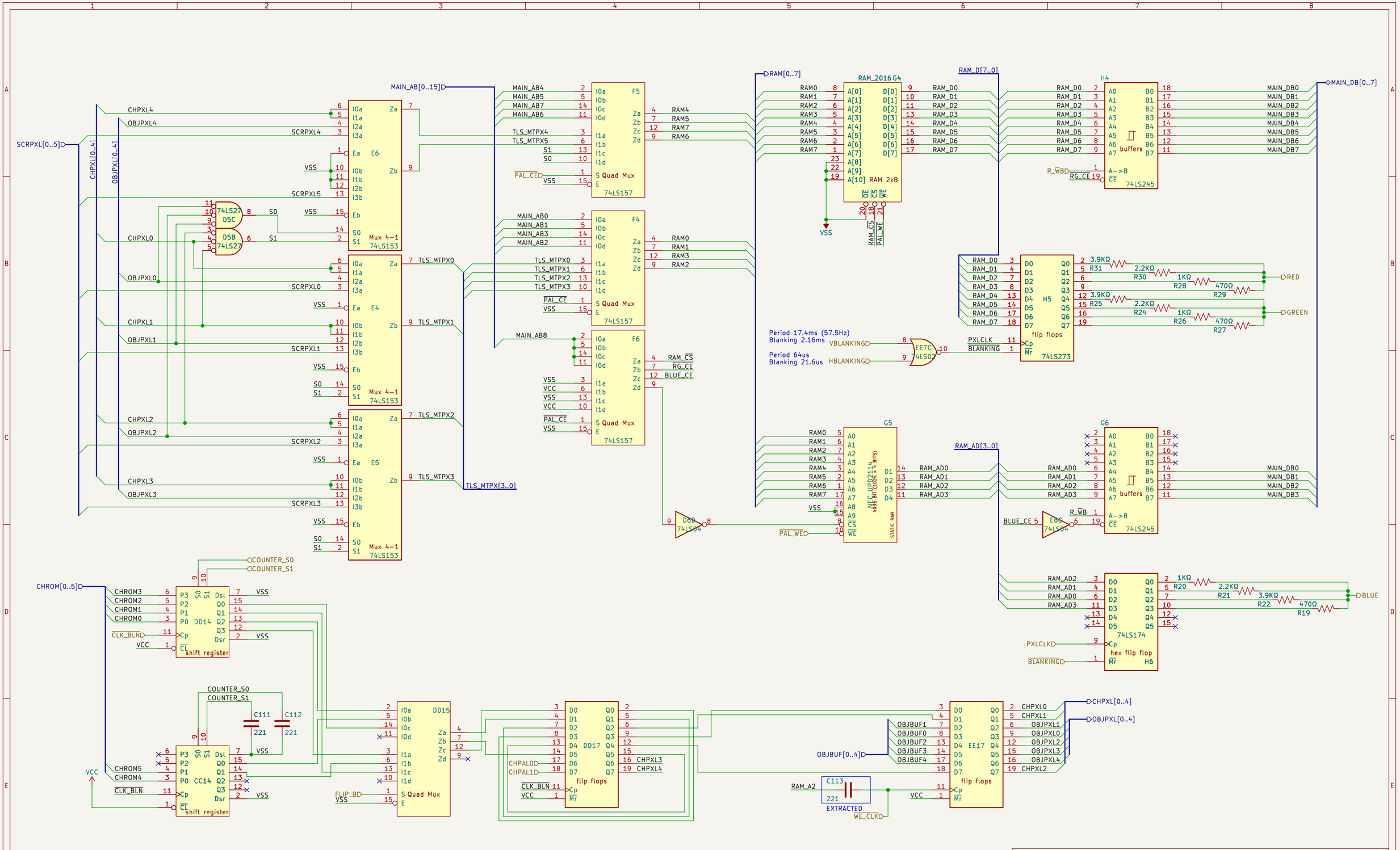

For repair and maintenance

JOTEGO

Sheet: /colmix/
File: colmix.kicad_sch

Title: RENEGADE

Size: A3	Date: 2022-07-08	**Rev: José Tejada**
KiCad E.D.A. 8.0.9		Id: 15/16

74LS86 BB16E	CC16E 74LS00	CC17G 74LS04	DD6C 74LS74	BB7C 74LS20	74LS27 EE14D	EE19G 74LS04	CC1C 74LS74	HH19E 74LS86	HH18E 74LS86	HH16E 74LS86	HH15E 74LS86	F14E 74LS08	E1G 74LS04	D6G 74LS04	D3C 74LS393	D13E 74LS86	D4C 74LS74	74LS00 A5E	E7E 74LS32	A4E 74LS08	74LS27 D5D

EE18E 74LS00	FF1C 74LS74	DD10E 74LS86	AA17E 74LS86	74LS04 AA15G	EE6C 74LS74	C15G 74LS04	BB1D 74LS10	G14C 74LS74	EE7E 74LS02	CC7E 74LS32	D11C 74LS139 decoder	E9C 74LS20	F15G 74LS14	H15C 74LS74	G15C 74LS74	E8G 74LS04	D12D 74LS10	BB19E 74LS86	BB18E 74LS86	74LS86 GG1E

VCC

EE13C 74LS139 decoder	DD7C 74LS74	DD18C 74LS112	74LS30 DD19B	DD16C 74LS74

VSS

For repair and maintenance

JOTEGO

Sheet: /last unit/
File: last unit.kicad_sch

Title: RENEGADE

Size: A4	Date: 2022-07-08	**Rev: José Tejada**
KiCad E.D.A. 8.0.9		Id: 16/16