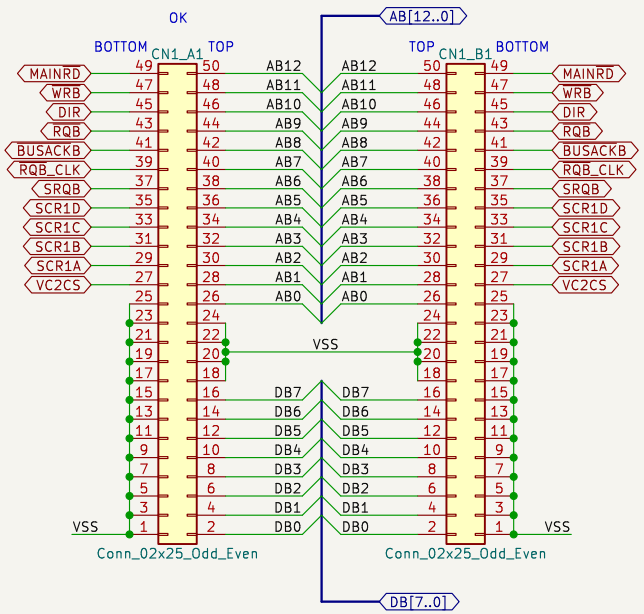

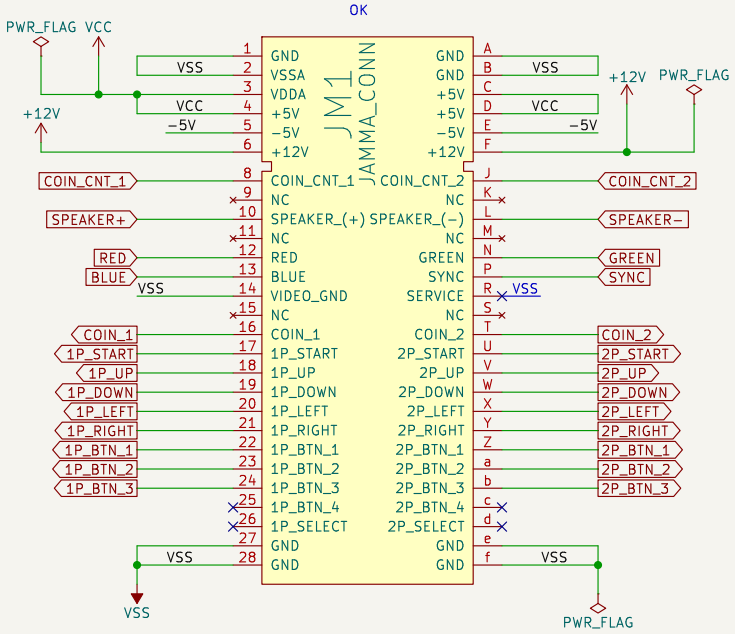

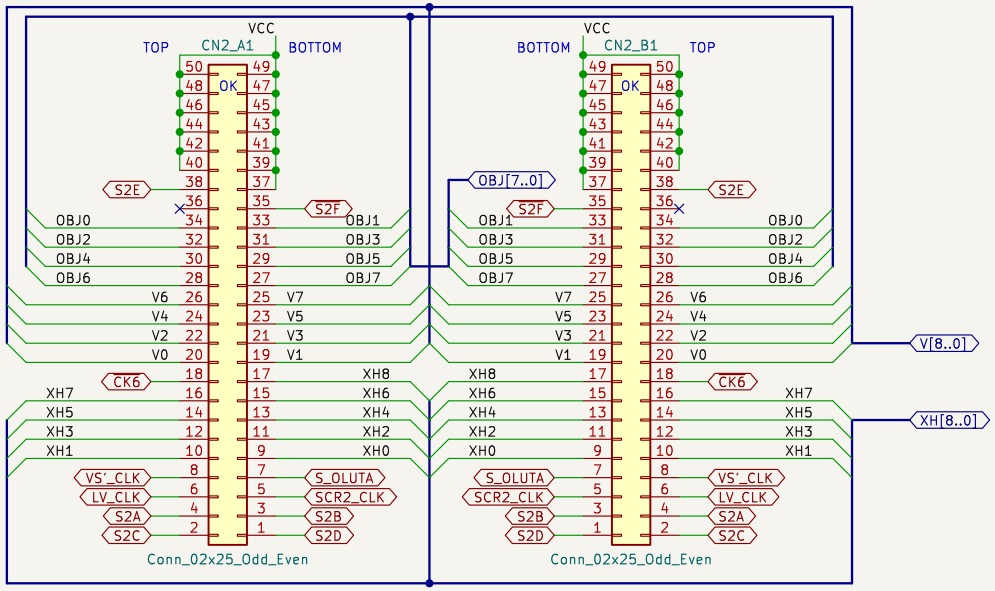

Observation
The pcb that has the jamma connector is the upper level and the location of each device is labeled with number, letter and number1. On the lower level pcb, the devices are labeled with letter and number.

video
File: video.kicad_sch

sound
File: sound.kicad_sch

main
File: main.kicad_sch

interruption
File: interruption.kicad_sch

video_timings
File: video_timings.kicad_sch

v_counter
File: v_counter.kicad_sch

h_counter
File: h_counter.kicad_sch

last_u
File: last_u.kicad_sch

capacitors
File: capacitors.kicad_sch

https://patreon.com/topapate
JOTEGO

Sheet: /
File: exed.kicad_sch

Title: Exed Exes board B

Size: A4	Date: 2021	Rev: José Tejada
KiCad E.D.A. 8.0.9		Id: 1/28

v_scroll

File: v_scroll.kicad_sch

h_scroll

File: h_scroll1.kicad_sch

scroll1

File: scroll1.kicad_sch

scroll2

File: scroll2.kicad_sch

colmix

File: colmix.kicad_sch

char

File: char.kicad_sch

object_table

File: object_table.kicad_sch

obj_ram

File: obj_ram.kicad_sch

obj_lut

File: obj_lut.kicad_sch

obj_counters

File: obj_counters.kicad_sch

logics_gates

File: logics_gates.kicad_sch

https://patreon.com/topapate

JOTEGO

Sheet: /video/

File: video.kicad_sch

Title: Exed Exes board B

Size: A4	Date: 2021	**Rev: José Tejada**
KiCad E.D.A. 8.0.9		Id: 2/28

Horizontal scroll

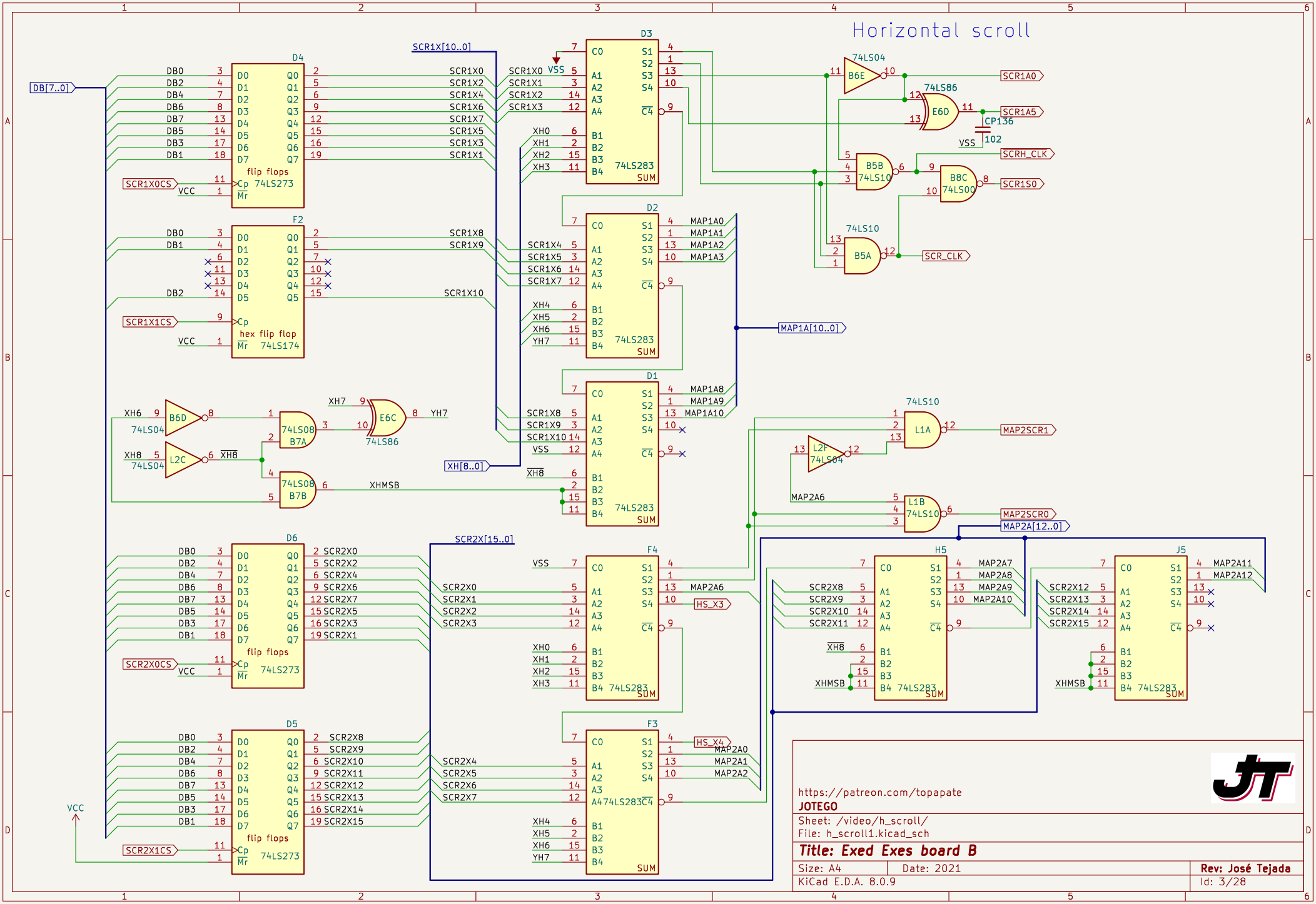

https://patreon.com/topapate

JOTEGO

Sheet: /video/h_scroll/

File: h_scroll1.kicad_sch

Title: Exed Exes board B

Size: A4	Date: 2021	**Rev: José Tejada**
KiCad E.D.A. 8.0.9		Id: 3/28

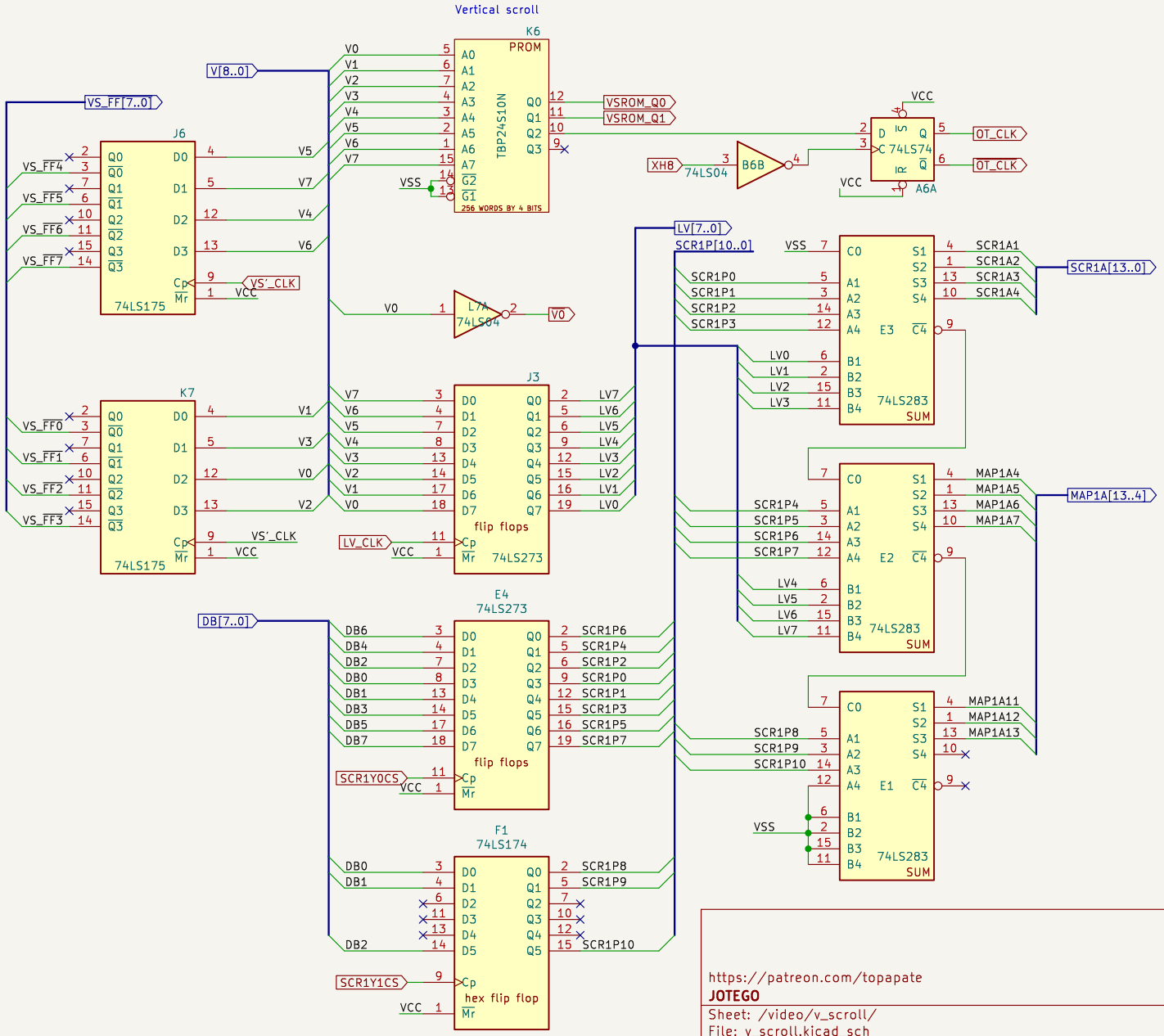
Vertical scroll
K6
PROM
TBP24S10N
256 WORDS BY 4 BITS
V[8..0]
VS_FF[7..0]
VSROM_Q0
VSROM_Q1
J6
74LS175
VS'_CLK
K7
74LS175
J3
flip flops
74LS273
LV_CLK
LV[7..0]
SCR1P[10..0]
74LS04
XH8
B6B
VCC
74LS74
A6A
OT_CLK
74LS283
SUM
SCR1A[13..0]
MAP1A[13..4]
DB[7..0]
E4
74LS273
SCR1Y0CS
F1
74LS174
hex flip flop
SCR1Y1CS
https://patreon.com/topapate
JOTEGO
Sheet: /video/v_scroll/
File: v_scroll.kicad_sch
Title: Exed Exes board B
Size: A4
Date: 2021
Rev: José Tejada
KiCad E.D.A. 8.0.9
Id: 4/28

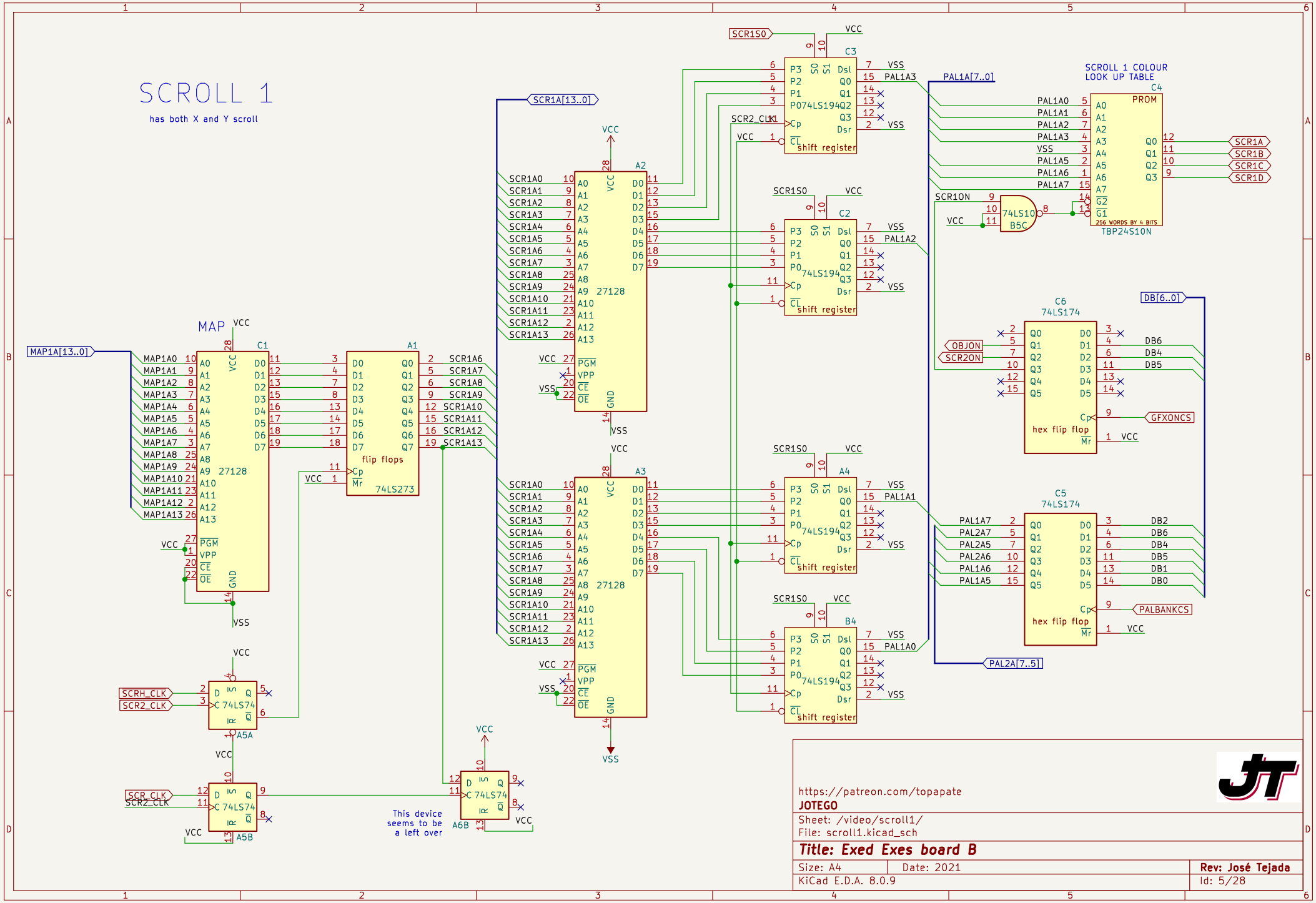
SCROLL 1
has both X and Y scroll
MAP
C1
27128
A1
flip flops
74LS273
A2
A3
C3
C2
A4
B4
74LS194
shift register
SCROLL 1 COLOUR
LOOK UP TABLE
C4
PROM
TBP24S10N
256 WORDS BY 4 BITS
74LS10
B5C
C6
74LS174
hex flip flop
C5
74LS174
hex flip flop
A5A
A5B
A6B
74LS74
This device
seems to be
a left over
MAP1A[13..0]
SCR1A[13..0]
PAL1A[7..0]
PAL2A[7..5]
DB[6..0]
SCR1A
SCR1B
SCR1C
SCR1D
GFXONCS
PALBANKCS
SCRH_CLK
SCR2_CLK
SCR_CLK
SCR1S0
SCR2_CLK
SCR1ON
OBJON
SCR2ON
VCC
VSS
https://patreon.com/topapate
JOTEGO
Sheet: /video/scroll1/
File: scroll1.kicad_sch
Title: Exed Exes board B
Size: A4
Date: 2021
Rev: José Tejada
KiCad E.D.A. 8.0.9
Id: 5/28

SCROLL 2

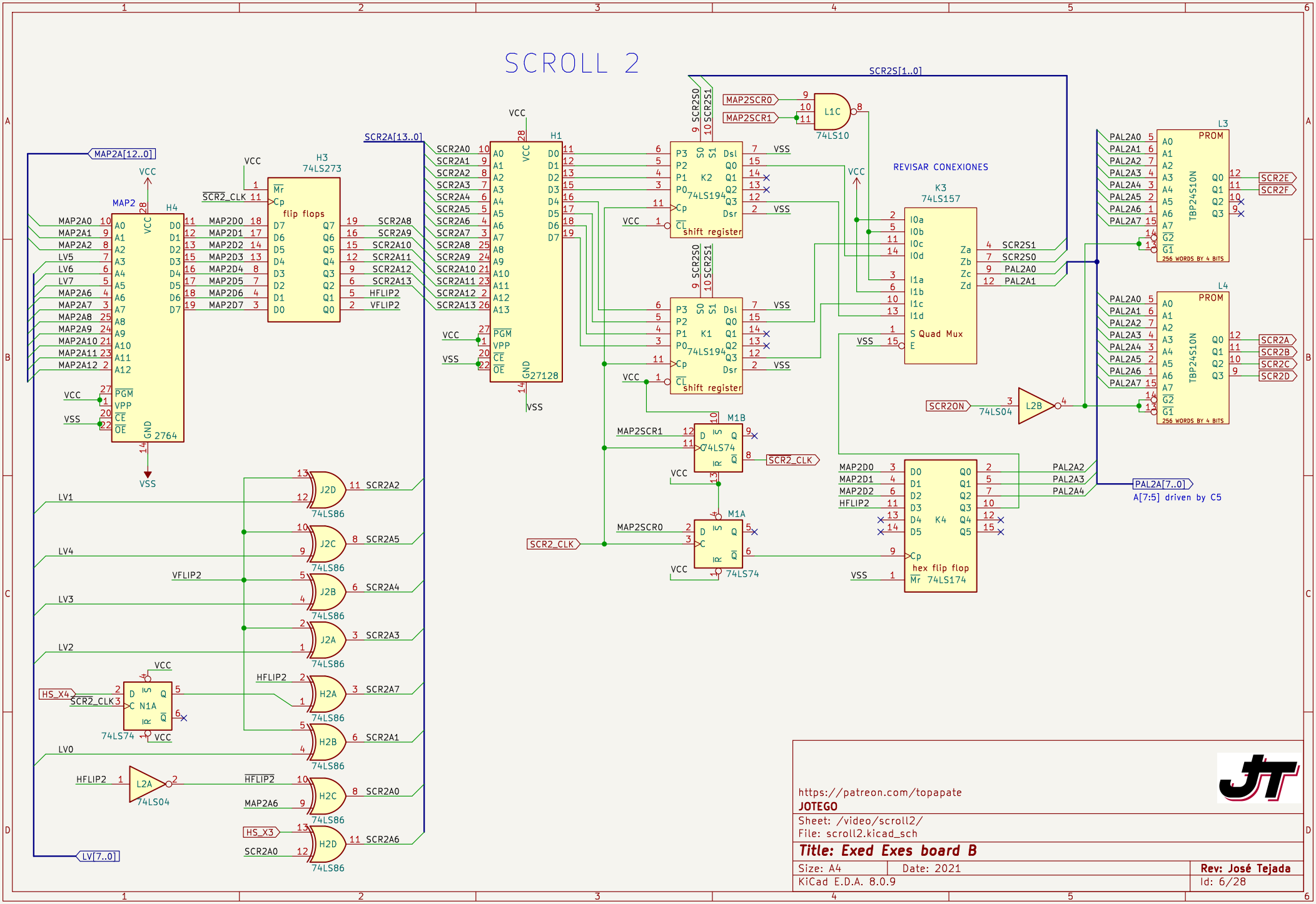

https://patreon.com/topapate

JOTEGO

Sheet: /video/scroll2/

File: scroll2.kicad_sch

Title: Exed Exes board B

Size: A4	Date: 2021	**Rev: José Tejada**
KiCad E.D.A. 8.0.9		Id: 6/28

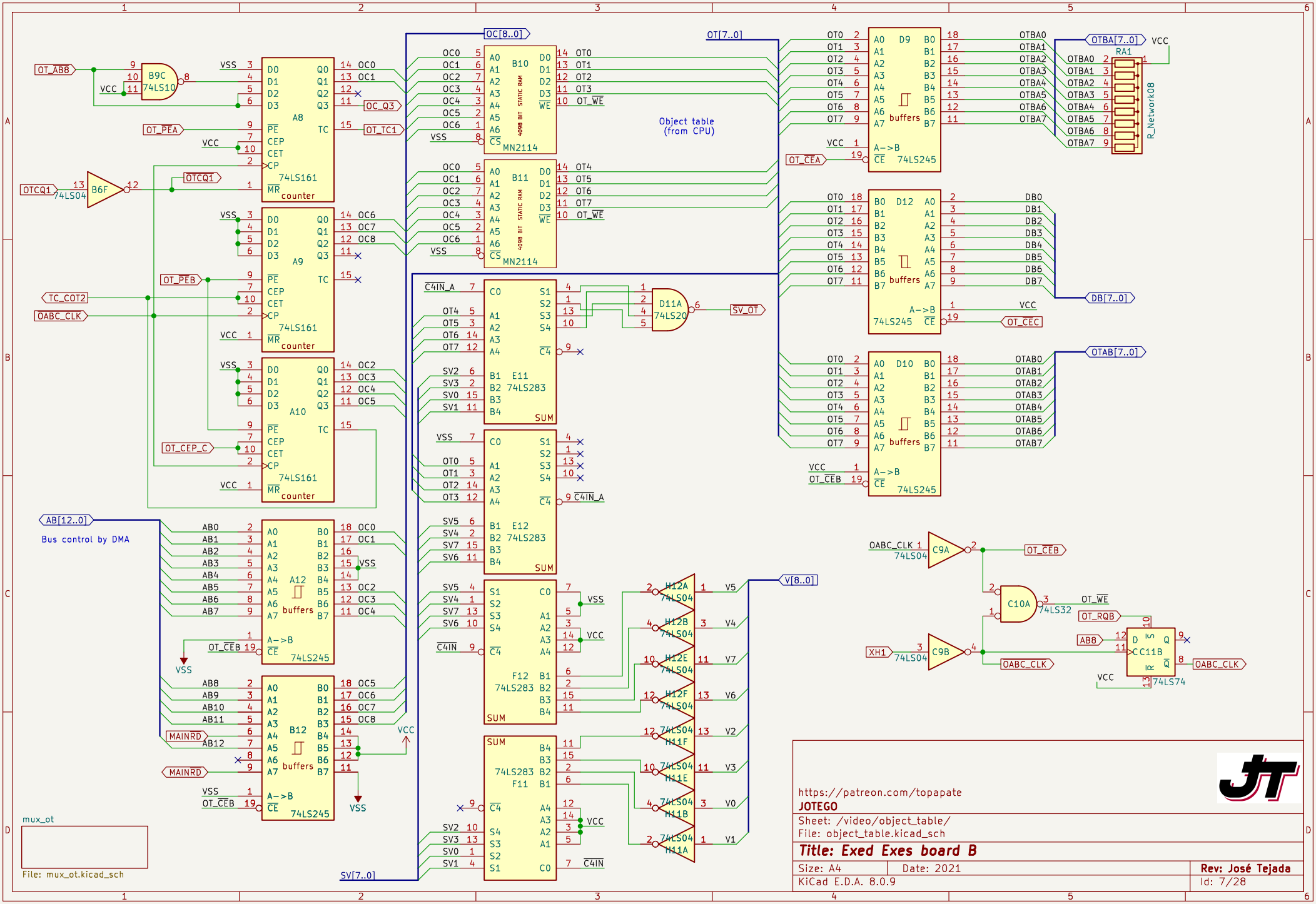

https://patreon.com/topapate

JOTEGO

Sheet: /video/object_table/

File: object_table.kicad_sch

Title: Exed Exes board B

Size: A4	Date: 2021	Rev: José Tejada
KiCad E.D.A. 8.0.9		Id: 7/28

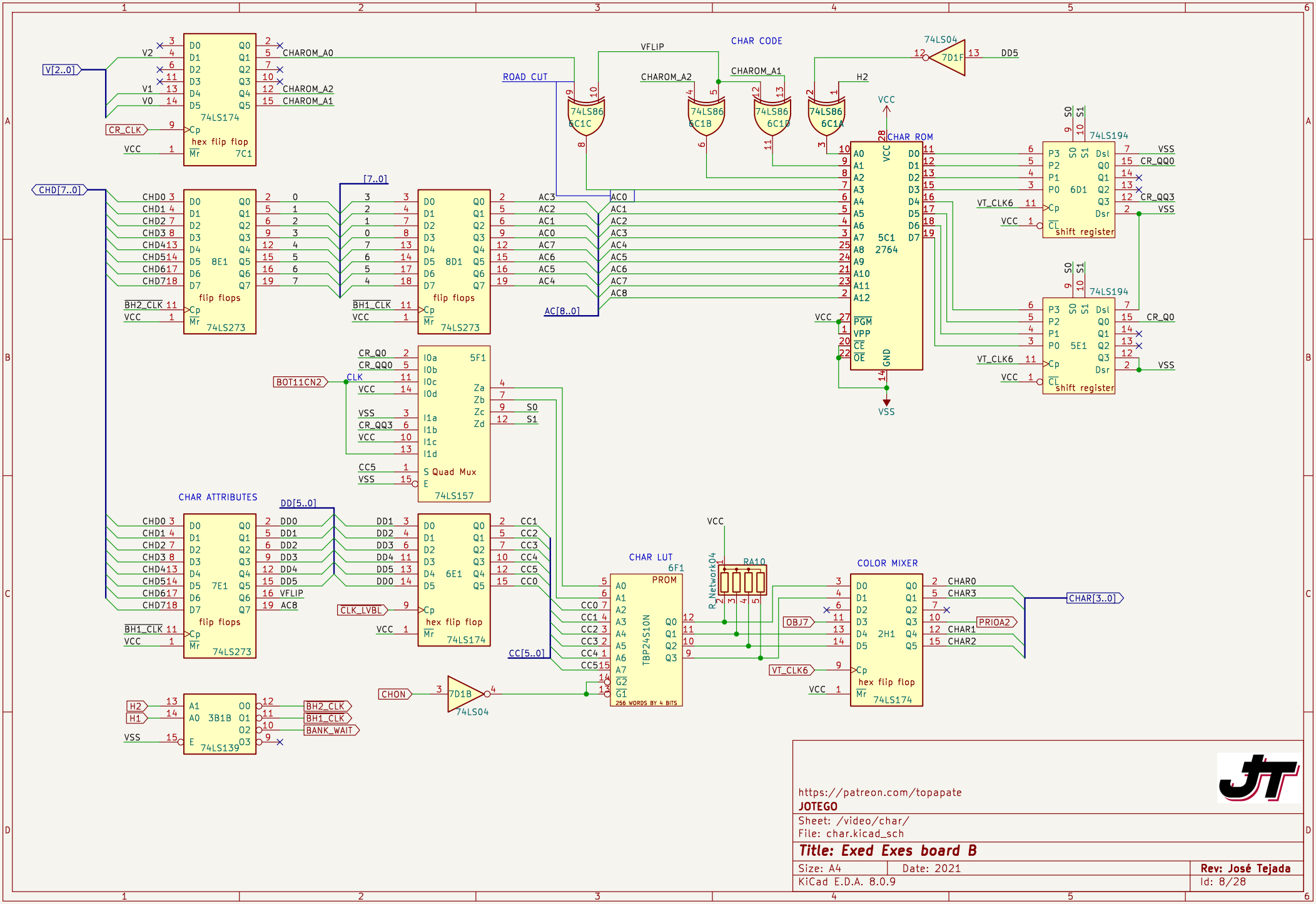

https://patreon.com/topapate

JOTEGO

Sheet: /video/char/

File: char.kicad_sch

Title: Exed Exes board B

Size: A4	Date: 2021	Rev: José Tejada
KiCad E.D.A. 8.0.9		Id: 8/28

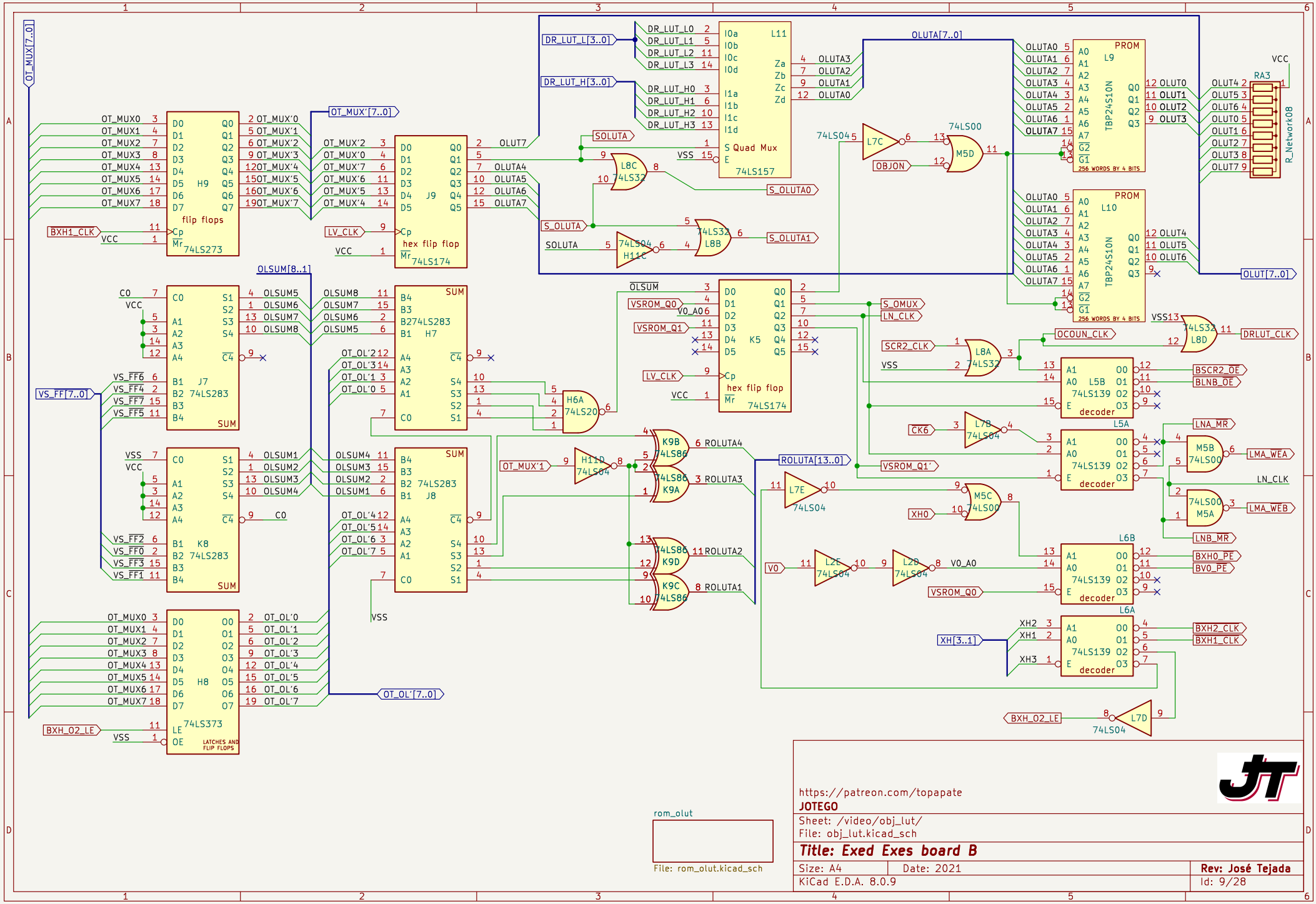
H9 flip flops 74LS273
J9 hex flip flop 74LS174
74LS157 Quad Mux
L9 TBP24S10N PROM 256 WORDS BY 4 BITS
L10 TBP24S10N PROM 256 WORDS BY 4 BITS
RA3 R_Network08
J7 74LS283 SUM
K8 74LS283 SUM
H7 74LS283 SUM
J8 74LS283 SUM
K5 hex flip flop 74LS174
L5B 74LS139 decoder
L5A 74LS139 decoder
L6B 74LS139 decoder
L6A 74LS139 decoder
H8 74LS373 LATCHES AND FLIP FLOPS
OT_MUX[7..0]
OT_MUX'[7..0]
OLSUM[8..1]
OT_OL'[7..0]
DR_LUT_L[3..0]
DR_LUT_H[3..0]
OLUTA[7..0]
OLUT[7..0]
VS_FF[7..0]
ROLUTA[13..0]
XH[3..1]
BXH1_CLK
BXH_02_LE
LV_CLK
SOLUTA
S_OLUTA
S_OLUTA0
S_OLUTA1
OBJON
S_OMUX
LN_CLK
OCOUN_CLK
DRLUT_CLK
SCR2_CLK
BSCR2_OE
BLNB_OE
CK6
VSROM_Q0
VSROM_Q1
VSROM_Q1'
V0
V0_A0
XH0
XH1
XH2
XH3
LNA_MR
LMA_WEA
LMA_WEB
LNB_MR
BXH0_PE
BV0_PE
BXH2_CLK
BXH1_CLK
VCC
VSS
https://patreon.com/topapate
JOTEGO
Sheet: /video/obj_lut/
File: obj_lut.kicad_sch
Title: Exed Exes board B
Size: A4
Date: 2021
Rev: José Tejada
KiCad E.D.A. 8.0.9
Id: 9/28
rom_olut
File: rom_olut.kicad_sch

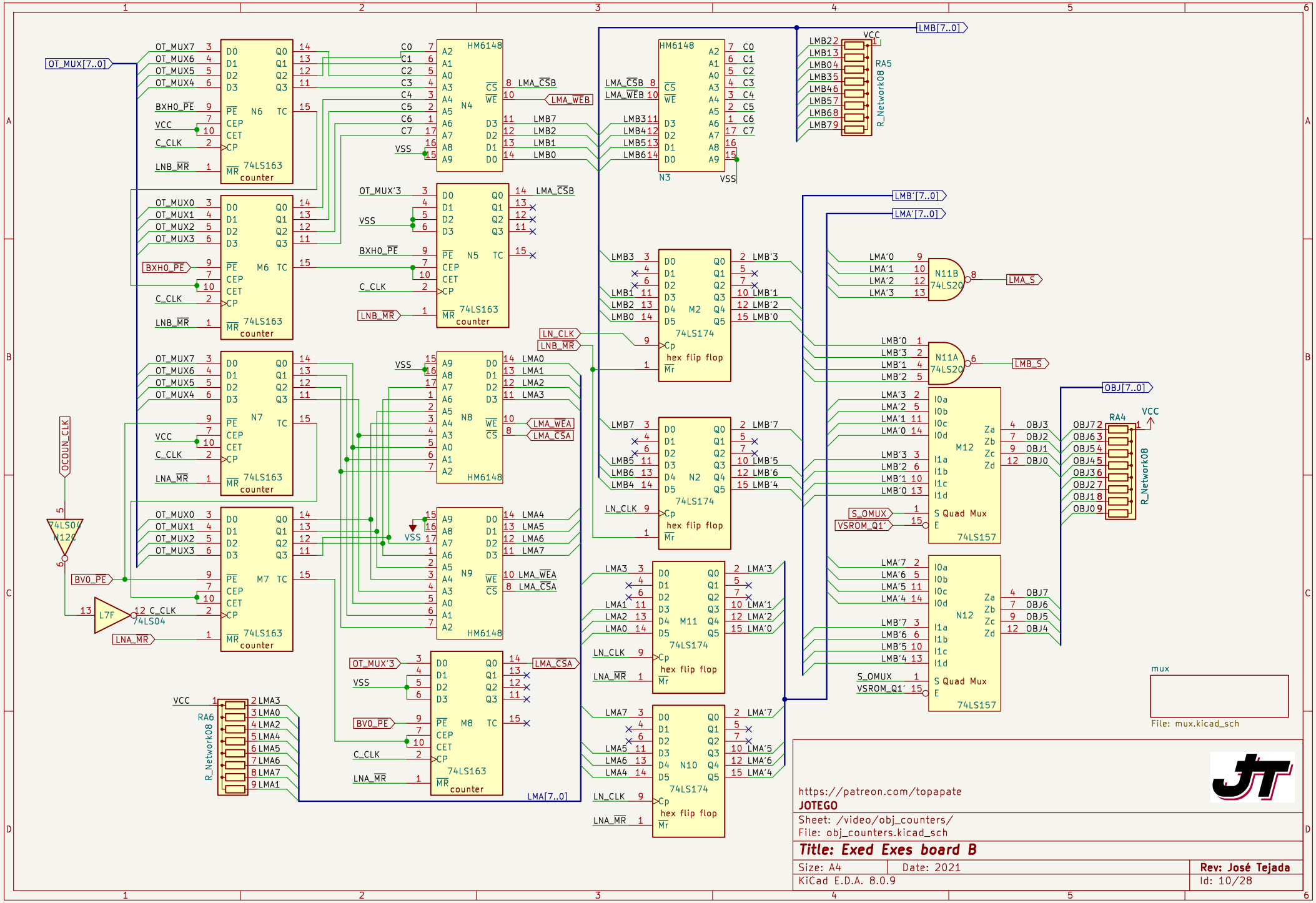
OT_MUX[7..0]
N6 74LS163 counter
M6 74LS163 counter
N7 74LS163 counter
M7 74LS163 counter
N4 HM6148
N5 74LS163 counter
N8 HM6148
N9 HM6148
M8 74LS163 counter
N3 HM6148
M2 74LS174 hex flip flop
N2 74LS174 hex flip flop
M11 74LS174 hex flip flop
N10 74LS174 hex flip flop
N11B 74LS20
N11A 74LS20
M12 74LS157 Quad Mux
N12 74LS157 Quad Mux
RA5 R_Network08
RA4 R_Network08
RA6 R_Network08
74LS04 H12C
L7F 74LS04
LMB[7..0]
LMB'[7..0]
LMA'[7..0]
OBJ[7..0]
LMA[7..0]
LMA_S
LMB_S
LMA_WEB
LMA_CSB
LMA_WEA
LMA_CSA
LN_CLK
LNB_MR
LNA_MR
OCOUN_CLK
BXH0_PE
BV0_PE
S_OMUX
VSROM_Q1'
VCC
VSS
mux
File: mux.kicad_sch
https://patreon.com/topapate
JOTEGO
Sheet: /video/obj_counters/
File: obj_counters.kicad_sch
Title: Exed Exes board B
Size: A4
Date: 2021
Rev: José Tejada
KiCad E.D.A. 8.0.9
Id: 10/28

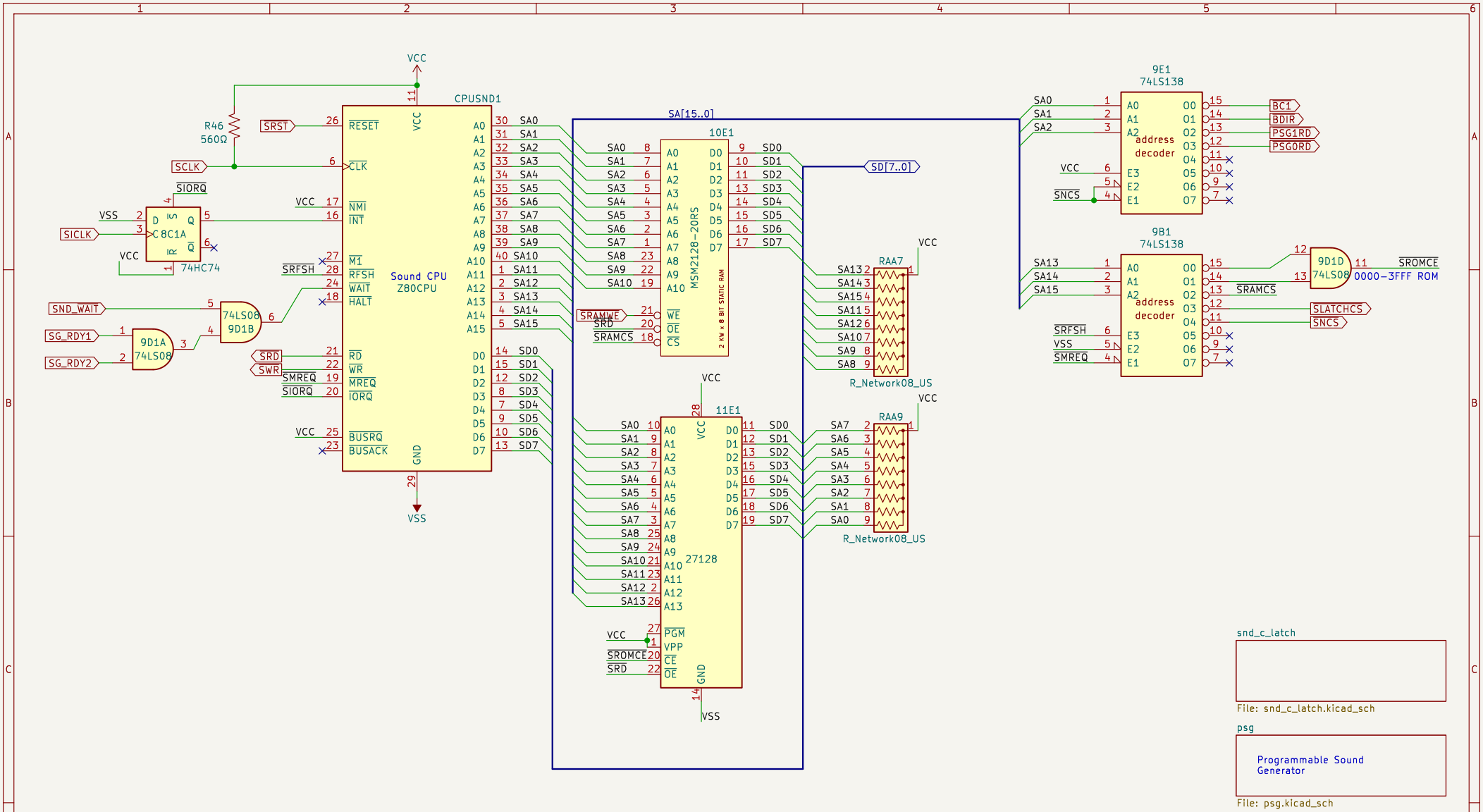

https://patreon.com/topapate

JOTEGO

Sheet: /sound/

File: sound.kicad_sch

Title: Exed Exes board B

Size: A4	Date: 2021	**Rev: José Tejada**
KiCad E.D.A. 8.0.9		Id: 11/28

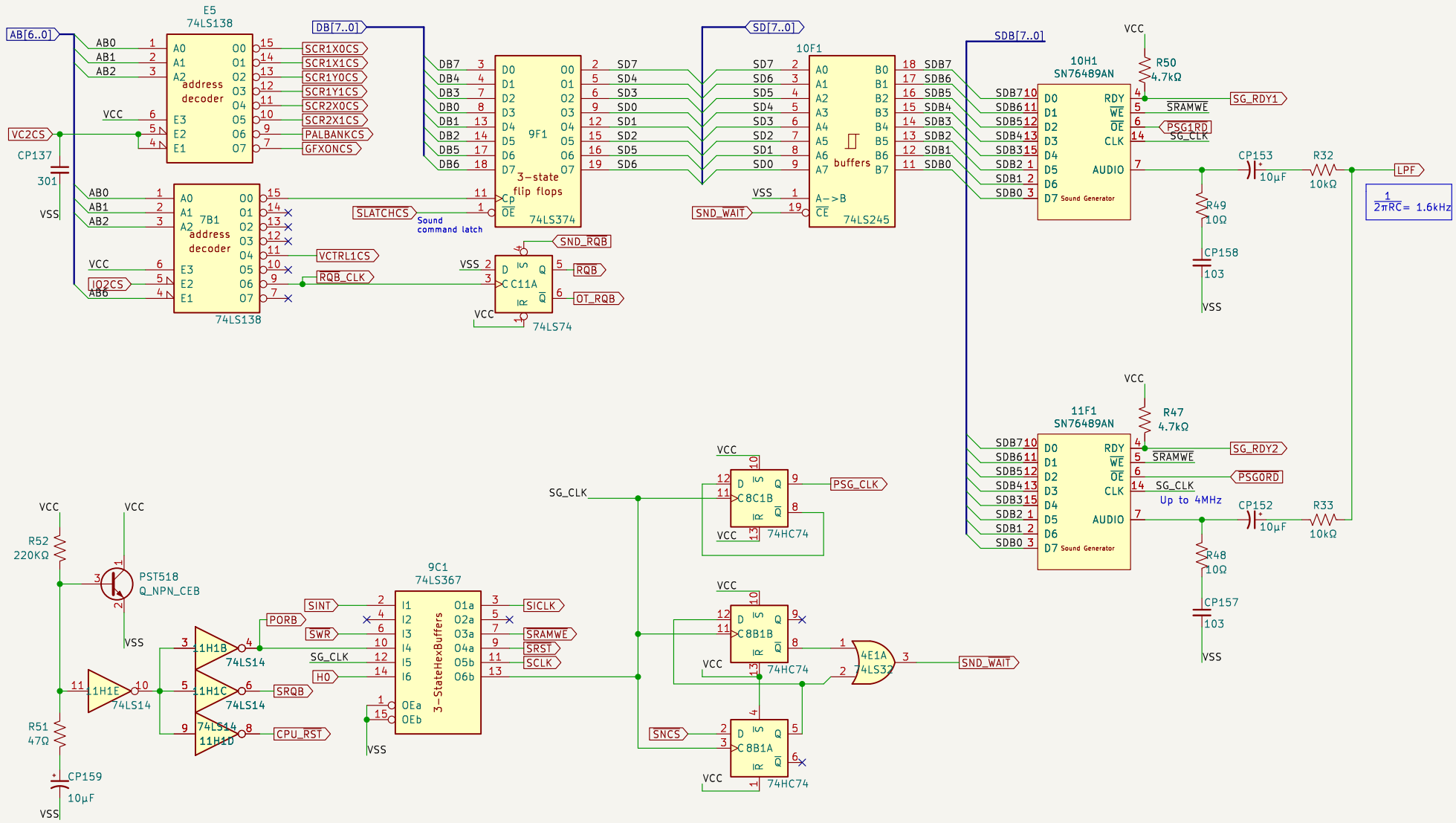

https://patreon.com/topapate

JOTEGO

Sheet: /sound/snd_c_latch/

File: snd_c_latch.kicad_sch

Title: Exed Exes board B

Size: A4	Date: 2021	Rev: José Tejada
KiCad E.D.A. 8.0.9		Id: 12/28

COLOR PROMS

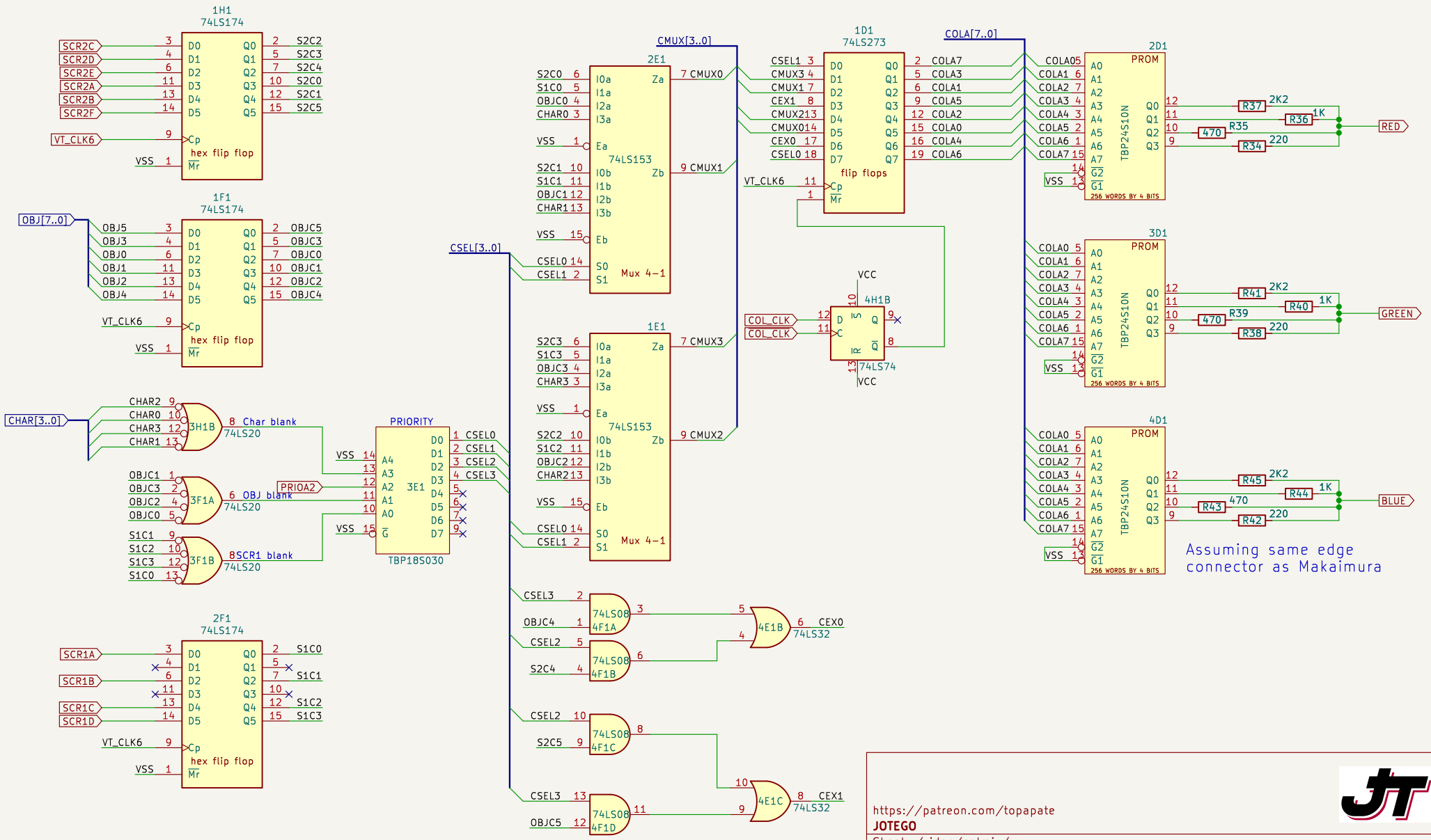

https://patreon.com/topapate

JOTEGO

Sheet: /video/colmix/

File: colmix.kicad_sch

Title: Exed Exes board B

Size: A4	Date: 2021	**Rev: José Tejada**
KiCad E.D.A. 8.0.9		Id: 13/28

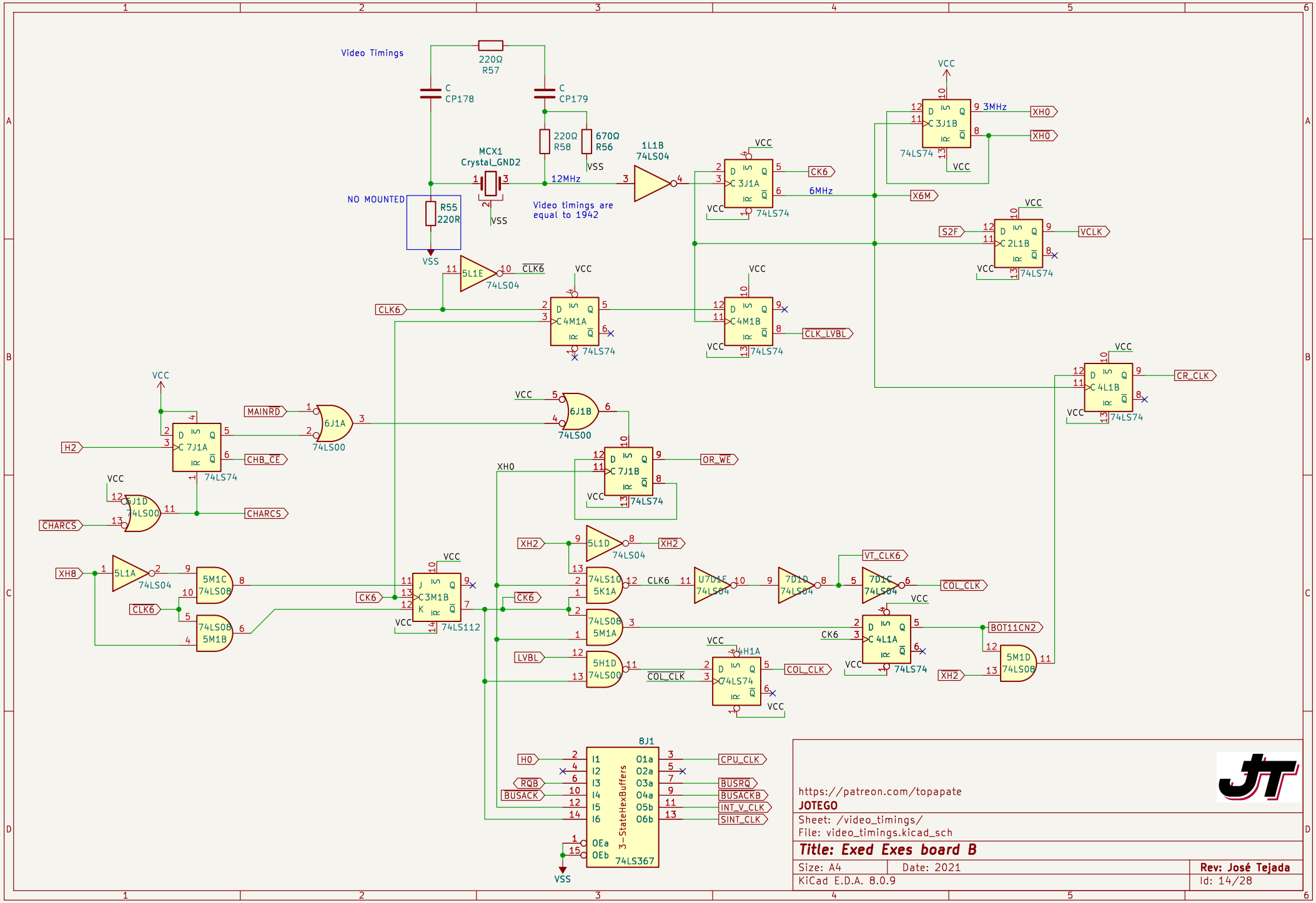

https://patreon.com/topapate

JOTEGO

Sheet: /video_timings/

File: video_timings.kicad_sch

Title: Exed Exes board B

Size: A4	Date: 2021	Rev: José Tejada
KiCad E.D.A. 8.0.9		Id: 14/28

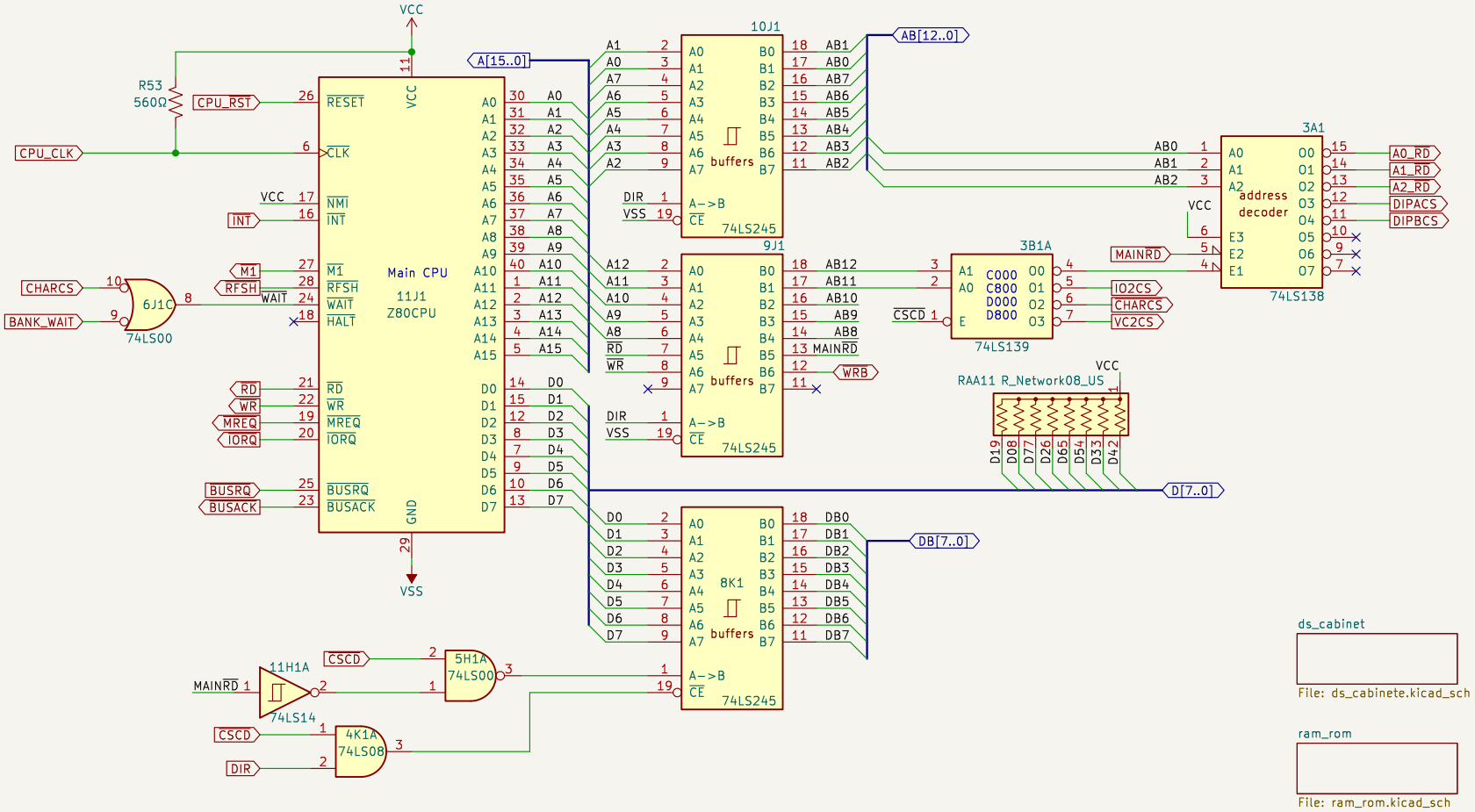

ds_cabinet

File: ds_cabinete.kicad_sch

ram_rom

File: ram_rom.kicad_sch

https://patreon.com/topapate

JOTEGO

Sheet: /main/

File: main.kicad_sch

Title: Exed Exes board B

Size: A4	Date: 2021	**Rev: José Tejada**
KiCad E.D.A. 8.0.9		Id: 15/28

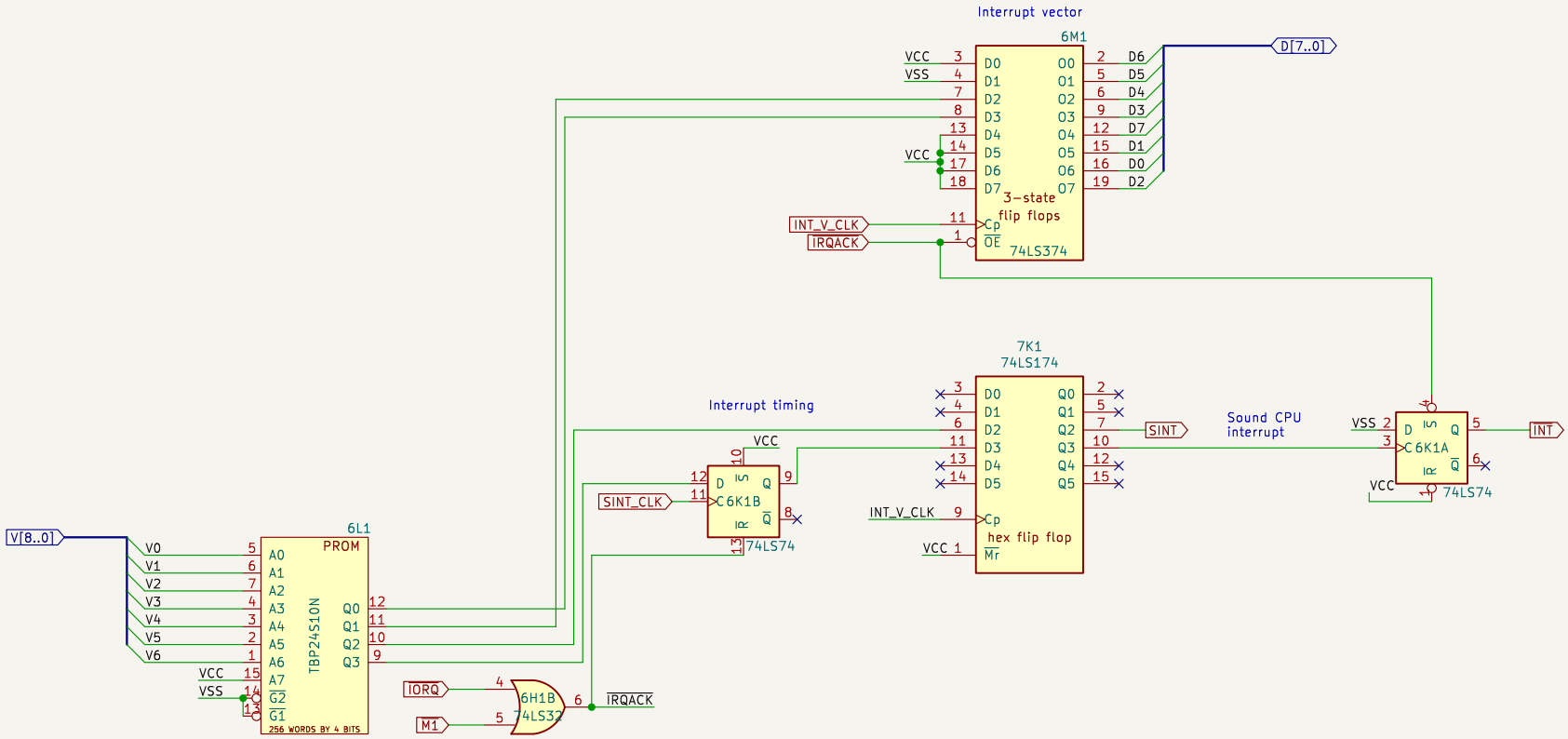

https://patreon.com/topapate

JOTEGO

Sheet: /interruption/

File: interruption.kicad_sch

Title: Exed Exes board B

Size: A4	Date: 2021	**Rev: José Tejada**
KiCad E.D.A. 8.0.9		Id: 16/28

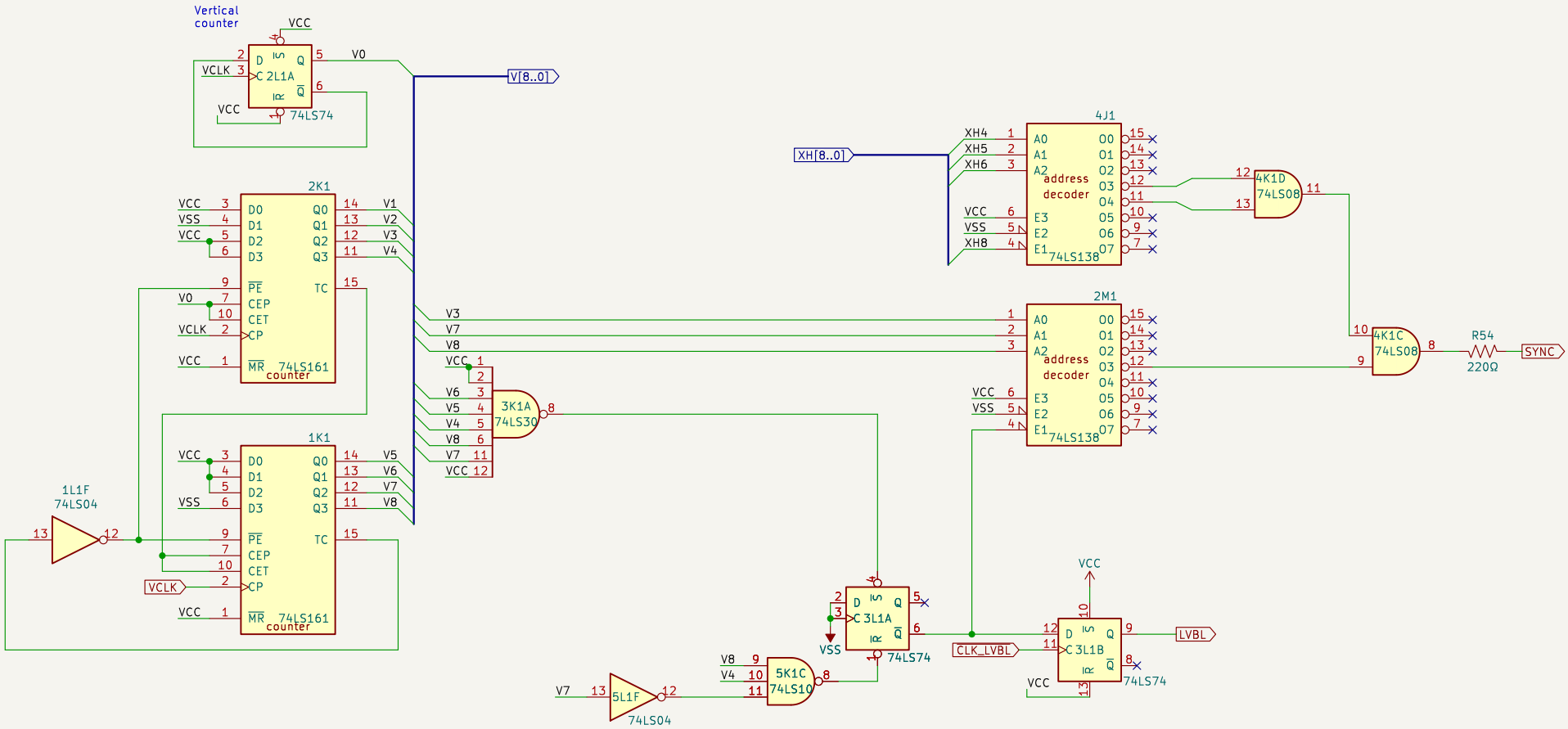

https://patreon.com/topapate

JOTEGO

Sheet: /v_counter/

File: v_counter.kicad_sch

Title: Exed Exes board B

Size: A4	Date: 2021	**Rev: José Tejada**
KiCad E.D.A. 8.0.9		Id: 17/28

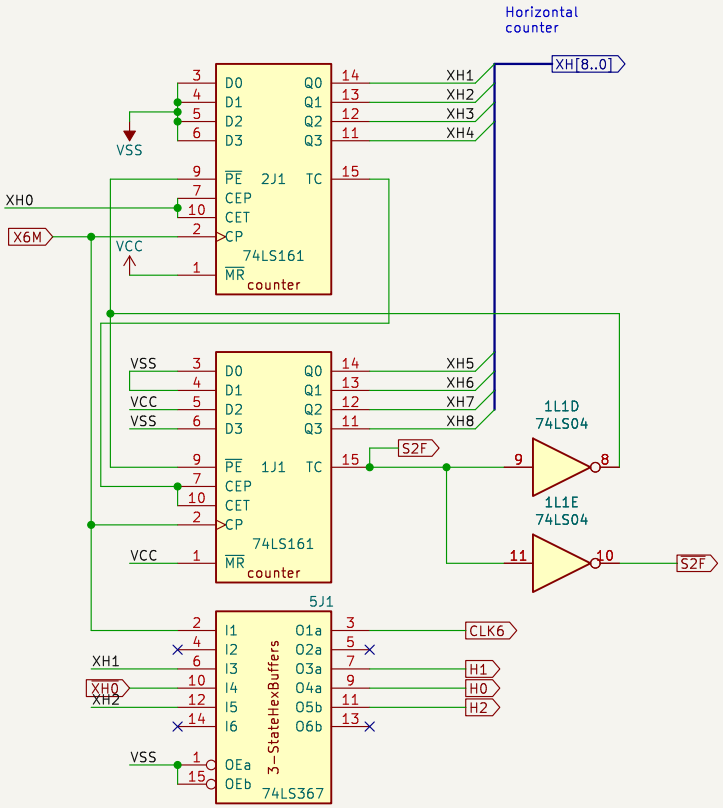

https://patreon.com/topapate

JOTEGO

Sheet: /h_counter/

File: h_counter.kicad_sch

Title: Exed Exes board B

Size: A4	Date: 2021	**Rev: José Tejada**
KiCad E.D.A. 8.0.9		Id: 18/28

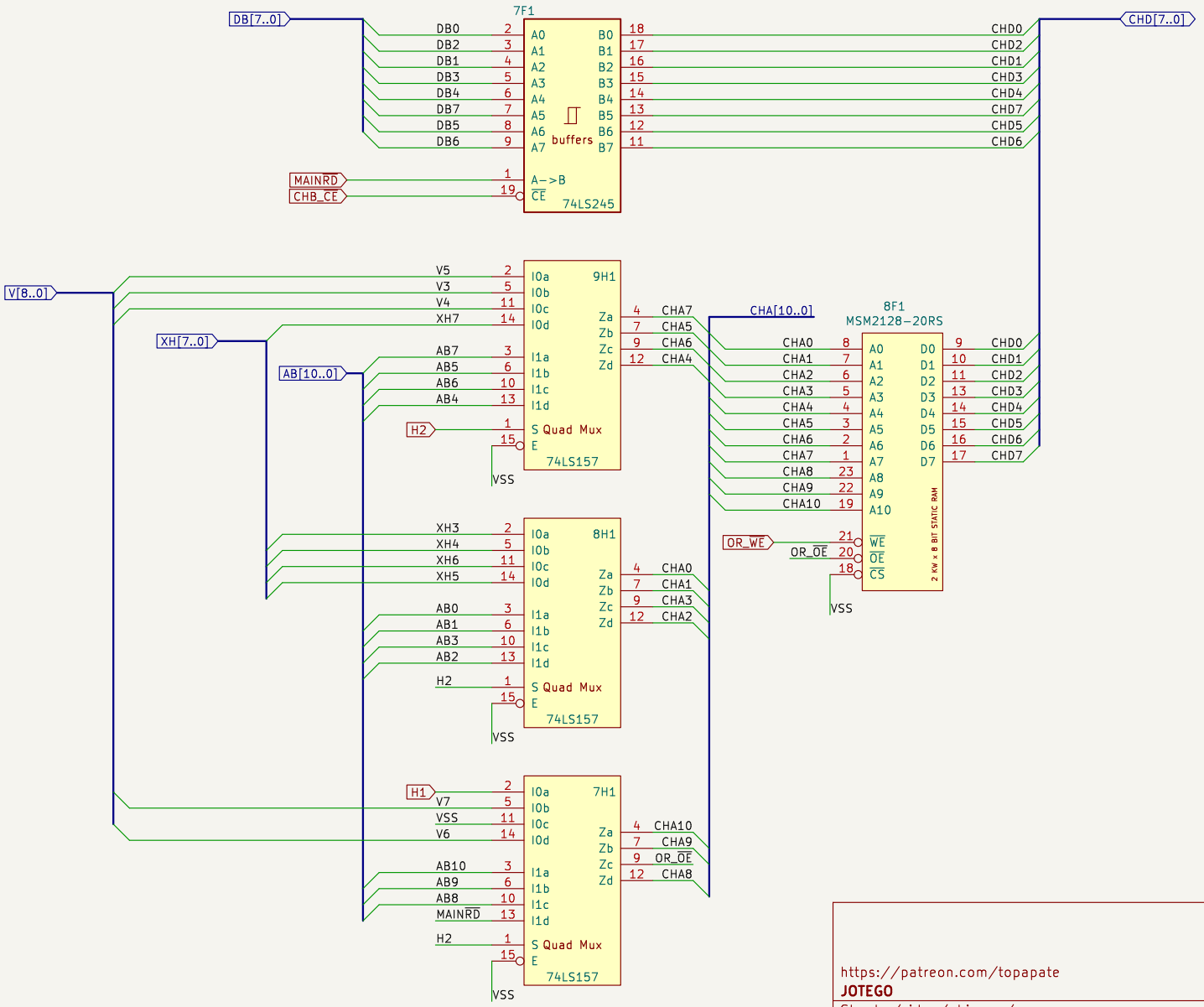

https://patreon.com/topapate

JOTEGO

Sheet: /video/obj_ram/

File: obj_ram.kicad_sch

Title: Exed Exes board B

Size: A4	Date: 2021	**Rev: José Tejada**
KiCad E.D.A. 8.0.9		Id: 19/28

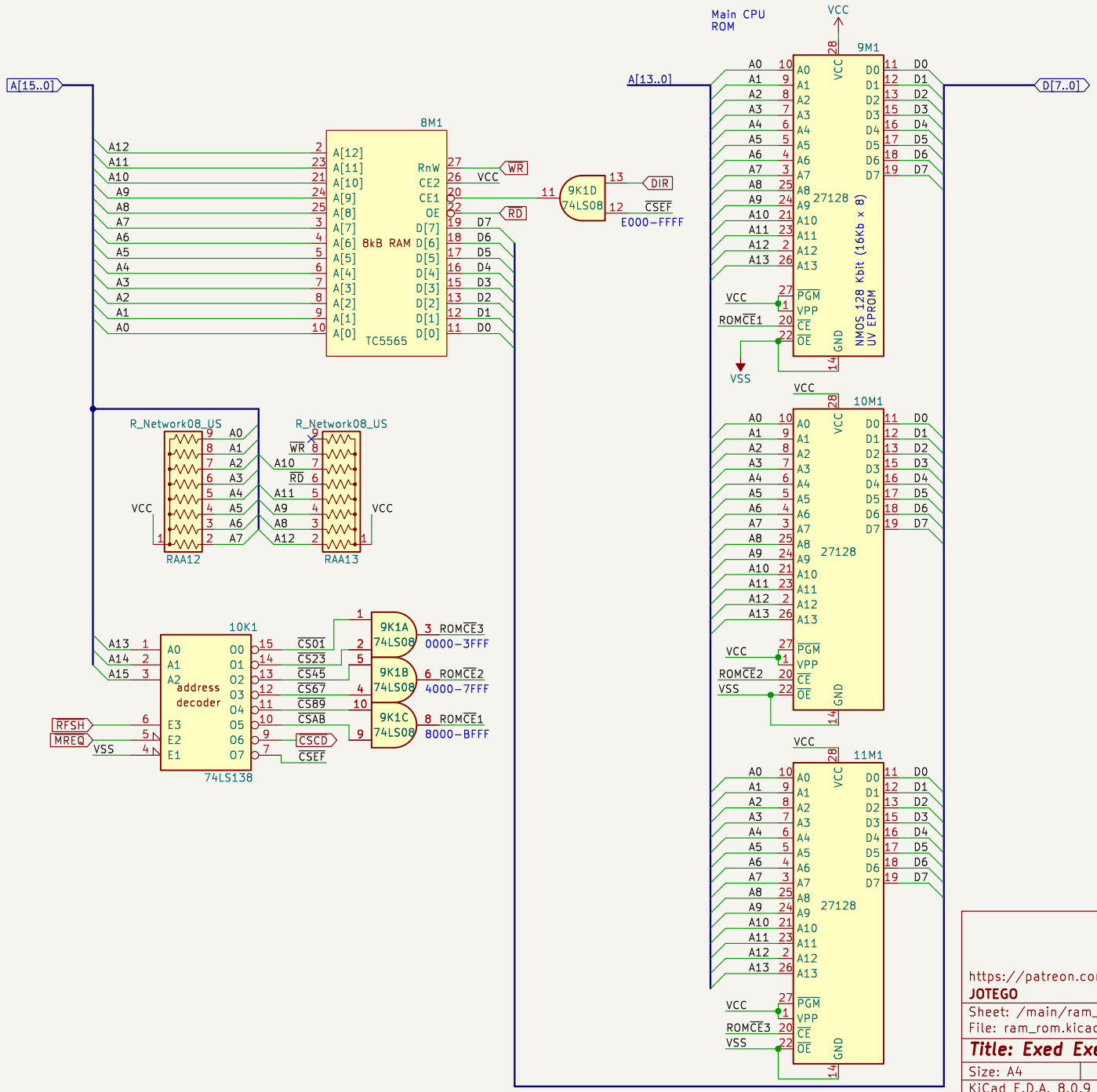

https://patreon.com/topapate

JOTEGO

Sheet: /main/ram_rom/

File: ram_rom.kicad_sch

Title: Exed Exes board B

Size: A4	Date: 2021	**Rev: José Tejada**
KiCad E.D.A. 8.0.9		Id: 20/28

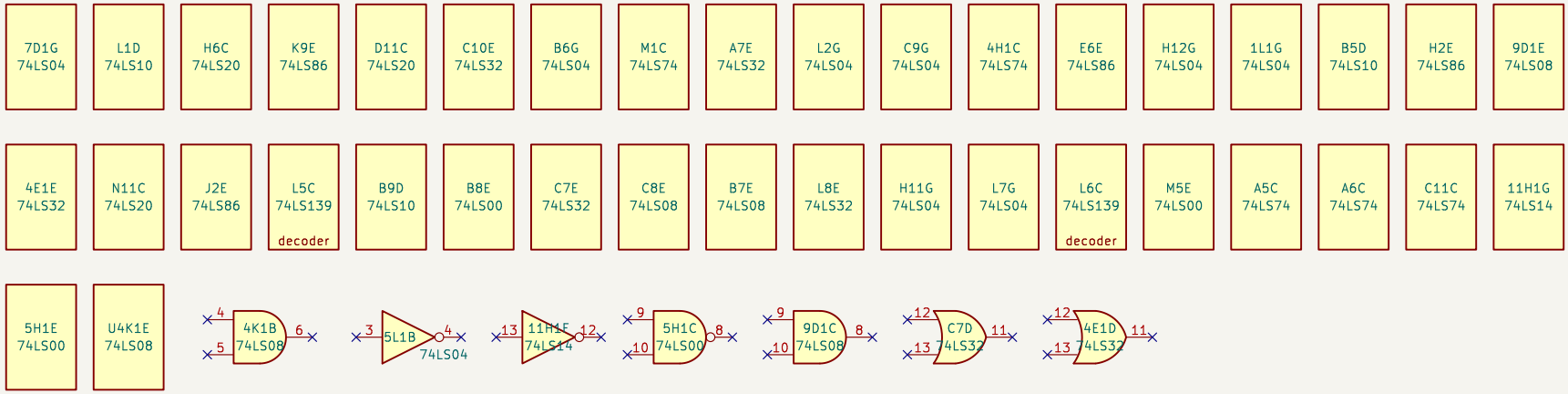

https://patreon.com/topapate

JOTEGO

Sheet: /last_u/

File: last_u.kicad_sch

Title: Exed Exes board B

Size: A4	Date: 2021	**Rev: José Tejada**
KiCad E.D.A. 8.0.9		Id: 20/28

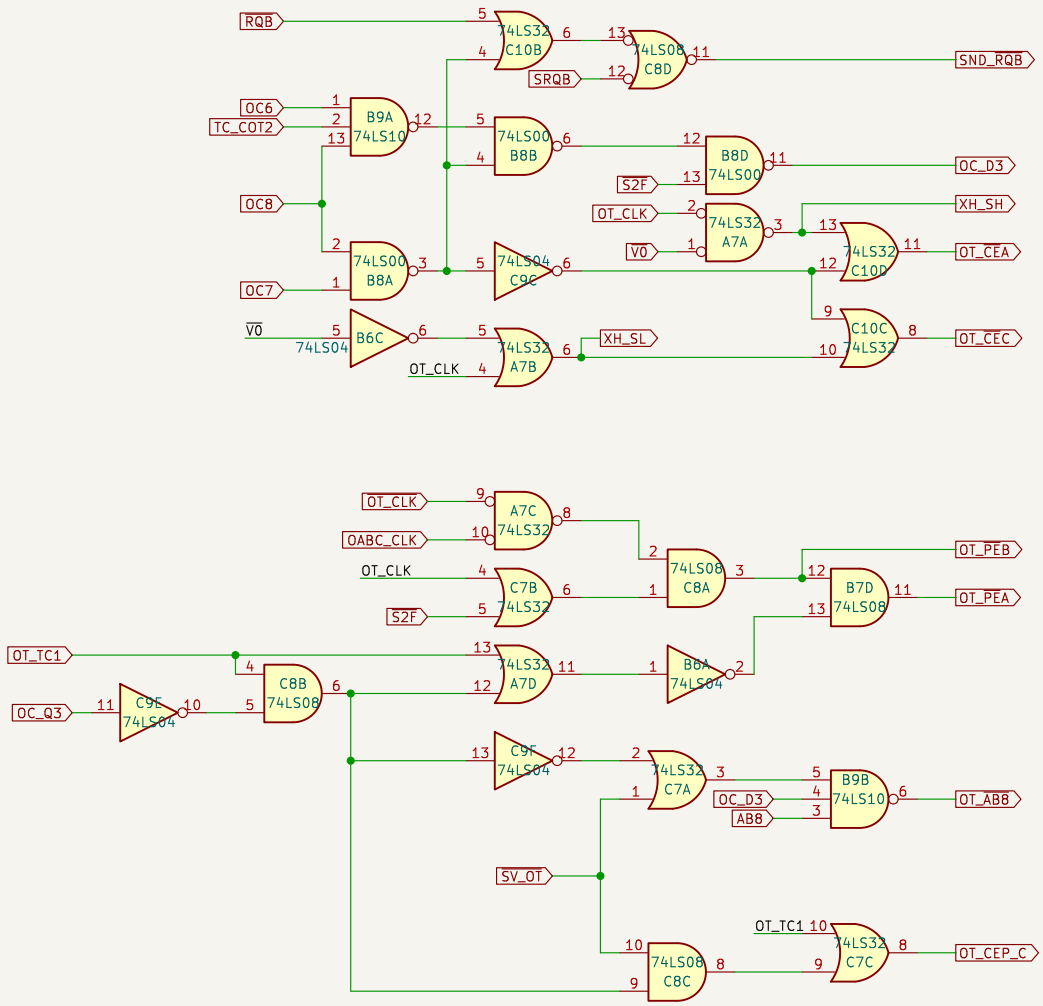

https://patreon.com/topapate

JOTEGO

Sheet: /video/logics_gates/

File: logics_gates.kicad_sch

Title: Exed Exes board B

Size: A4	Date: 2021	**Rev: José Tejada**
KiCad E.D.A. 8.0.9		Id: 21/28

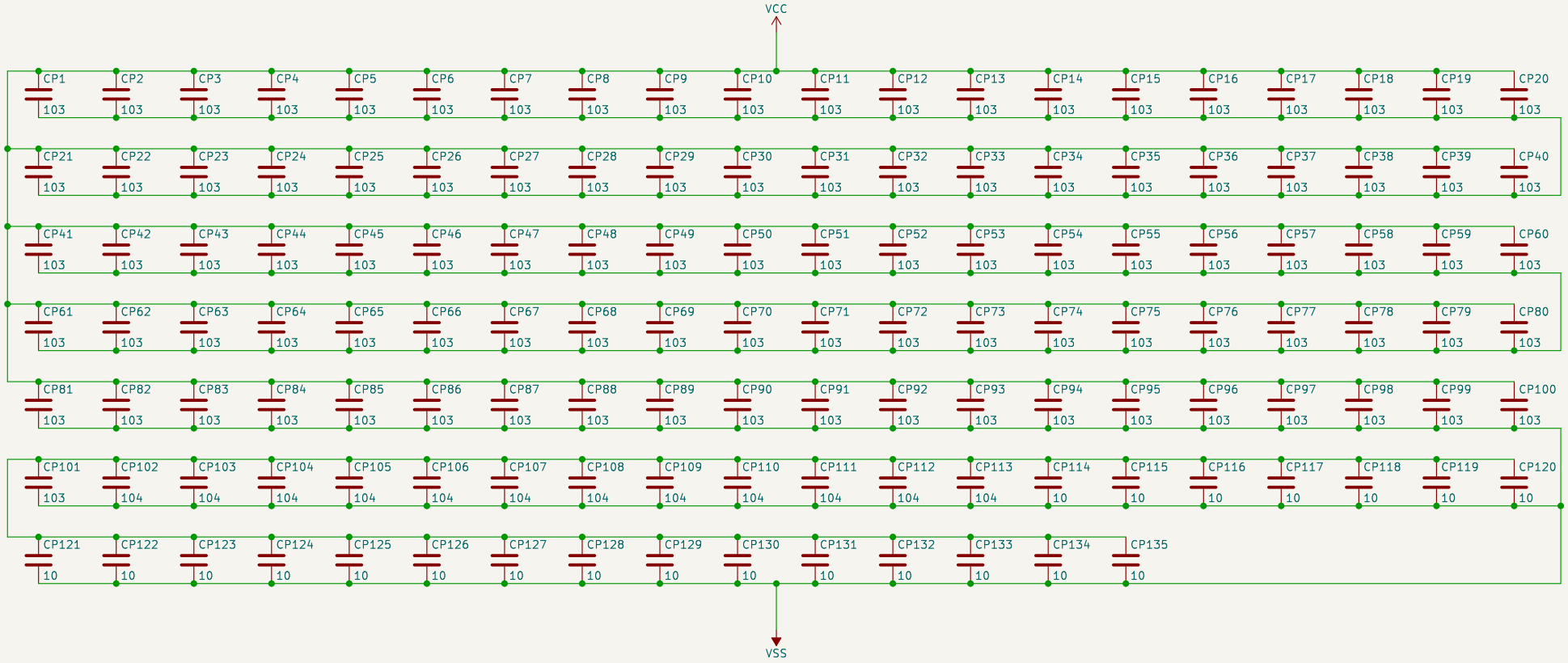

https://patreon.com/topapate
JOTEGO

Sheet: /capacitors/
File: capacitors.kicad_sch

Title: Exed Exes board B

Size: A4	Date: 2021	**Rev: José Tejada**
KiCad E.D.A. 8.0.9		Id: 22/28

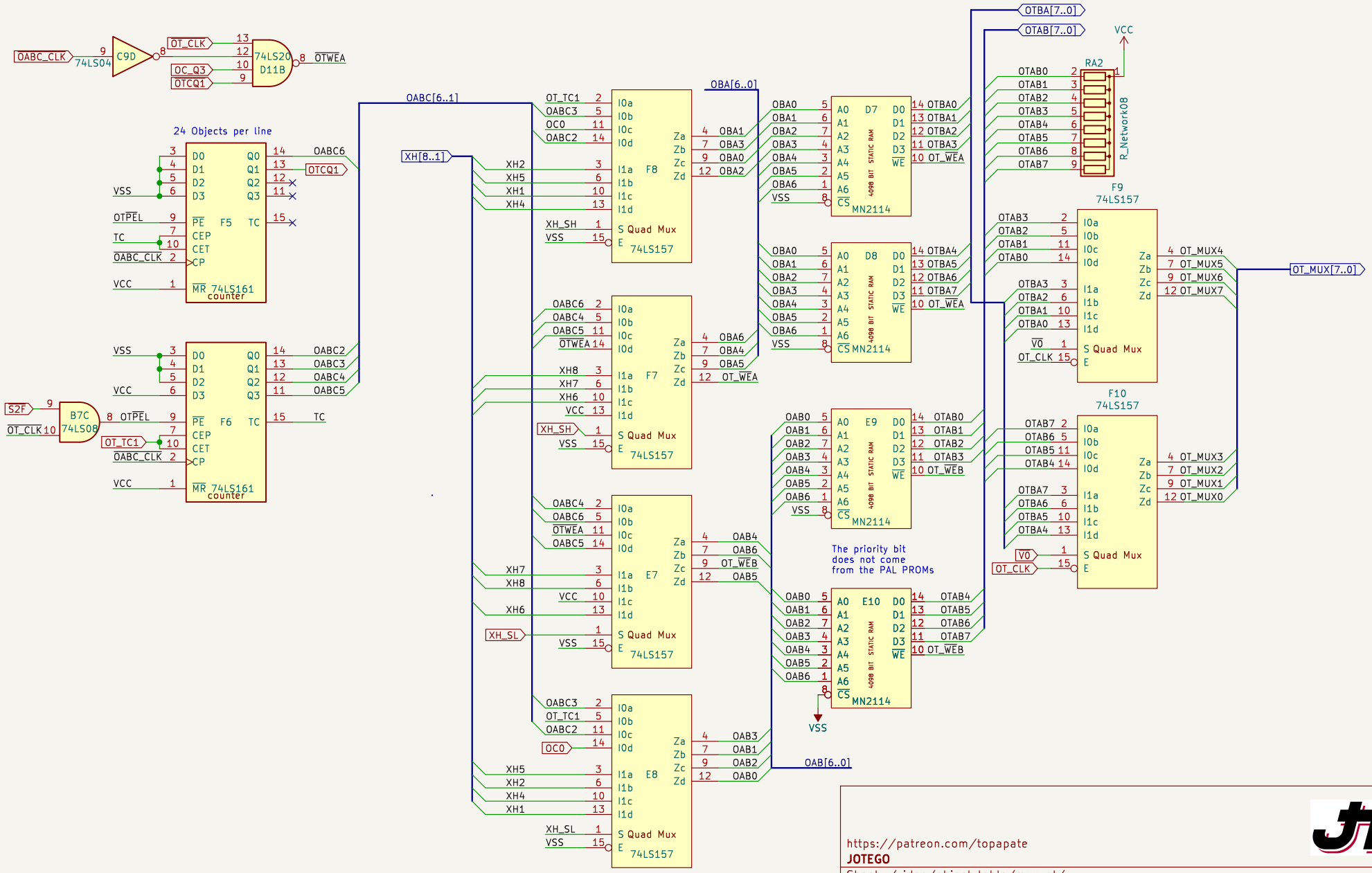

https://patreon.com/topapate

JOTEGO

Sheet: /video/object_table/mux_ot/

File: mux_ot.kicad_sch

Title: Exed Exes board B

Size: A4	Date: 2021	**Rev: José Tejada**
KiCad E.D.A. 8.0.9		Id: 23/28

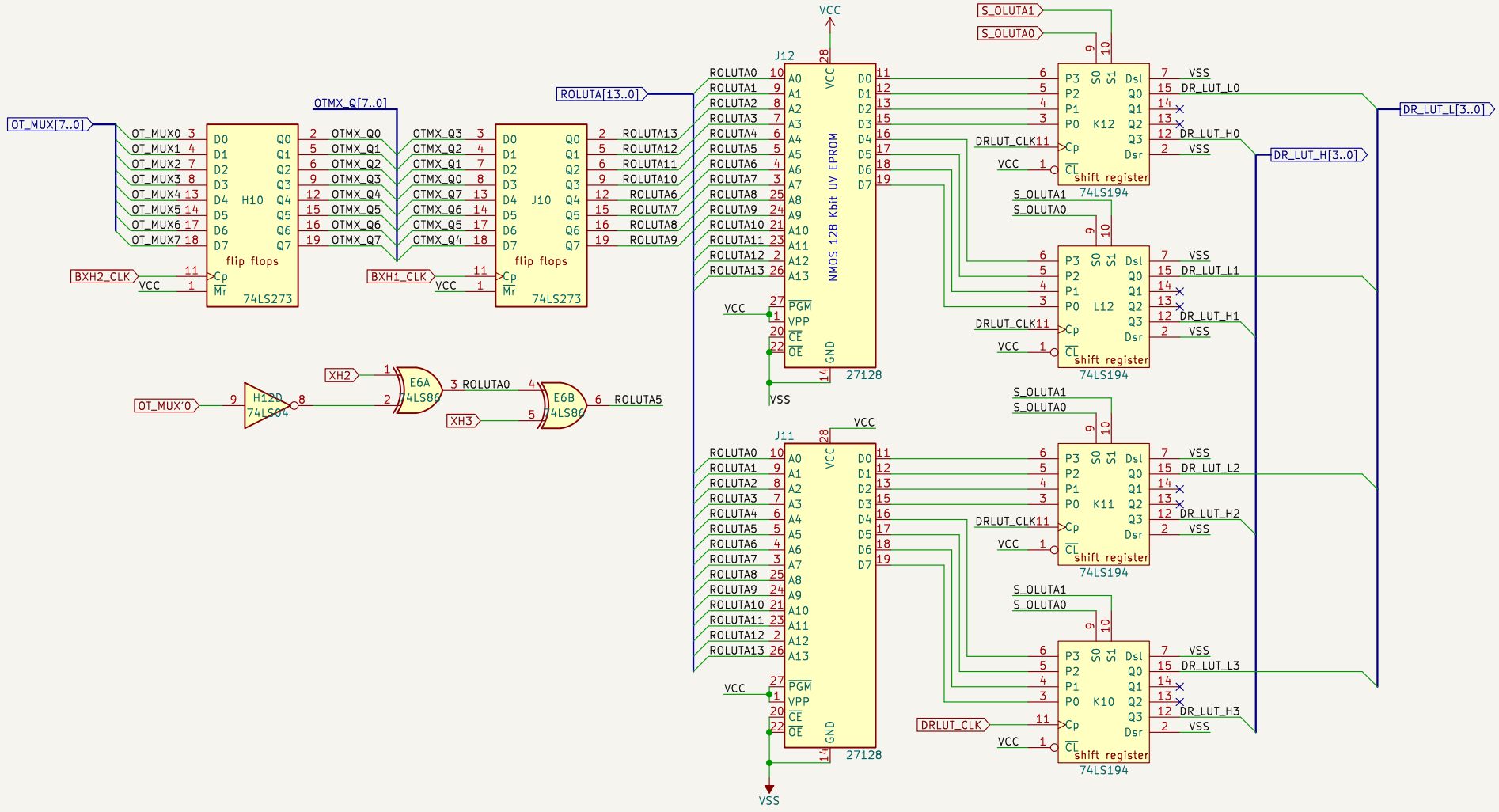

https://patreon.com/topapate

JOTEGO

Sheet: /video/obj_lut/rom_olut/

File: rom_olut.kicad_sch

Title: Exed Exes board B

Size: A4	Date: 2021	**Rev: José Tejada**
KiCad E.D.A. 8.0.9		Id: 24/28

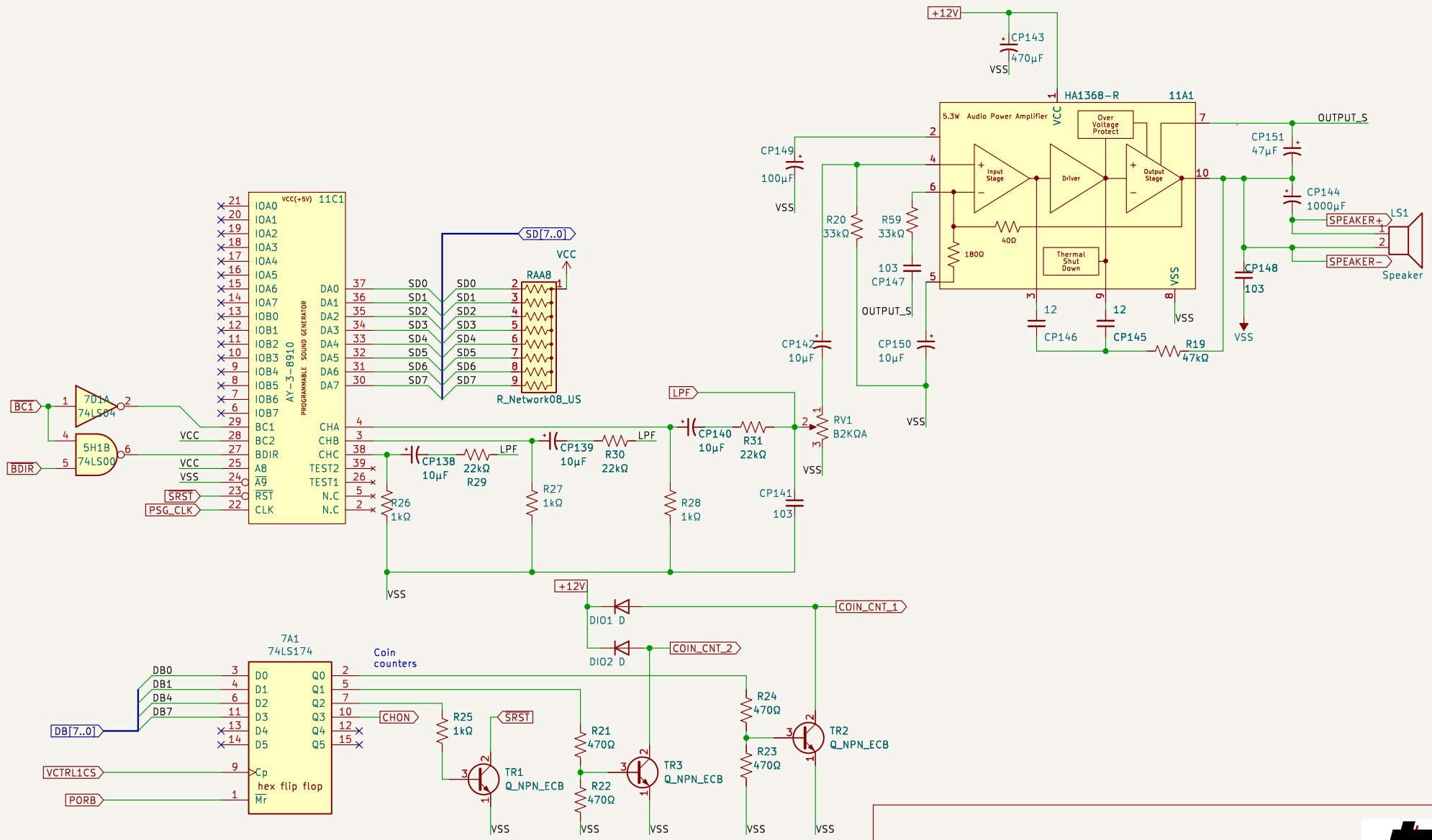

https://patreon.com/topapate

JOTEGO

Sheet: /sound/psg/

File: psg.kicad_sch

Title: Exed Exes board B

Size: A4	Date: 2021	**Rev: José Tejada**
KiCad E.D.A. 8.0.9		Id: 26/28

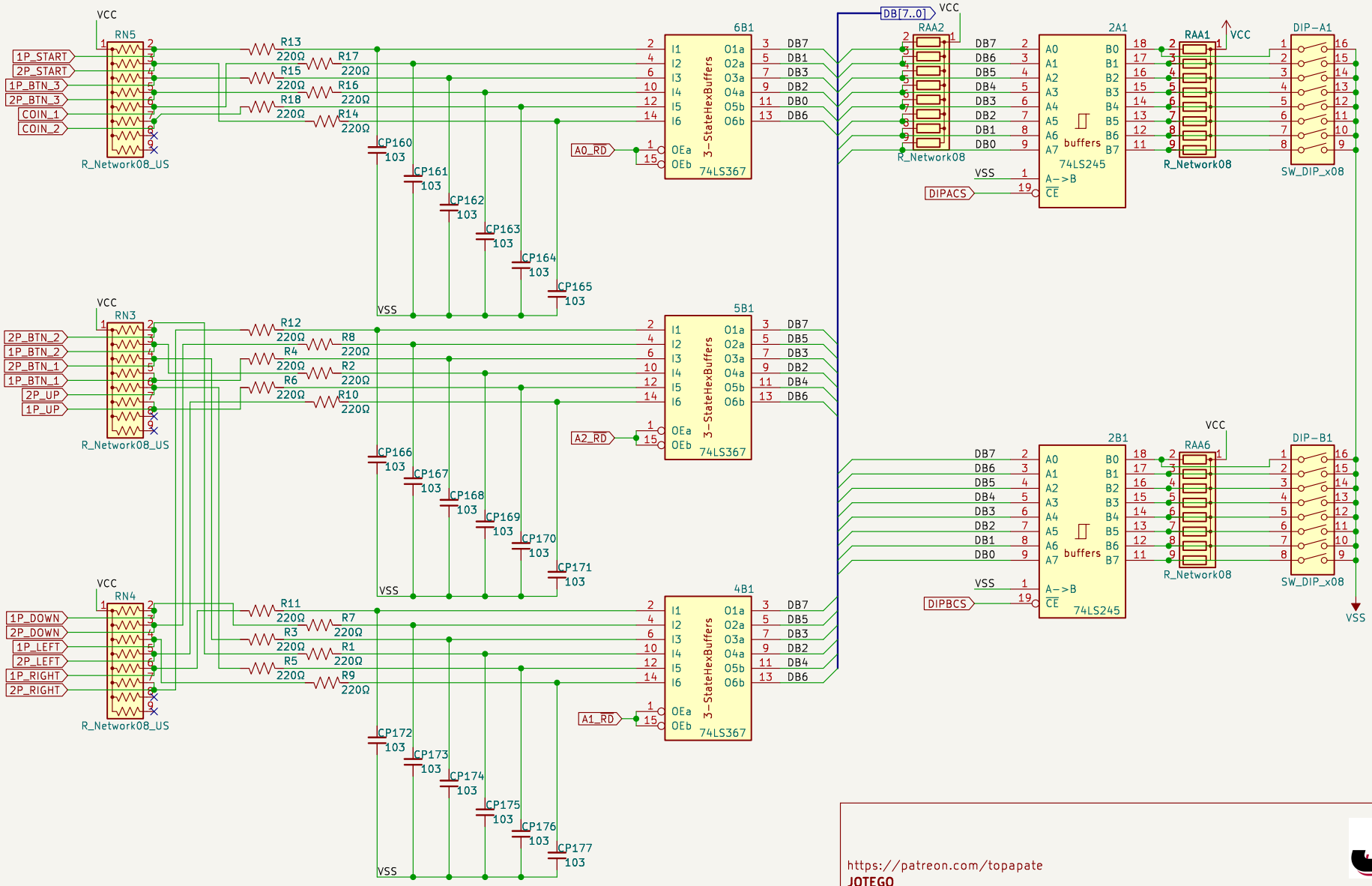

https://patreon.com/topapate

JOTEGO

Sheet: /main/ds_cabinet/

File: ds_cabinete.kicad_sch

Title: Exed Exes board B

Size: A4	Date: 2021	**Rev: José Tejada**
KiCad E.D.A. 8.0.9		Id: 26/28

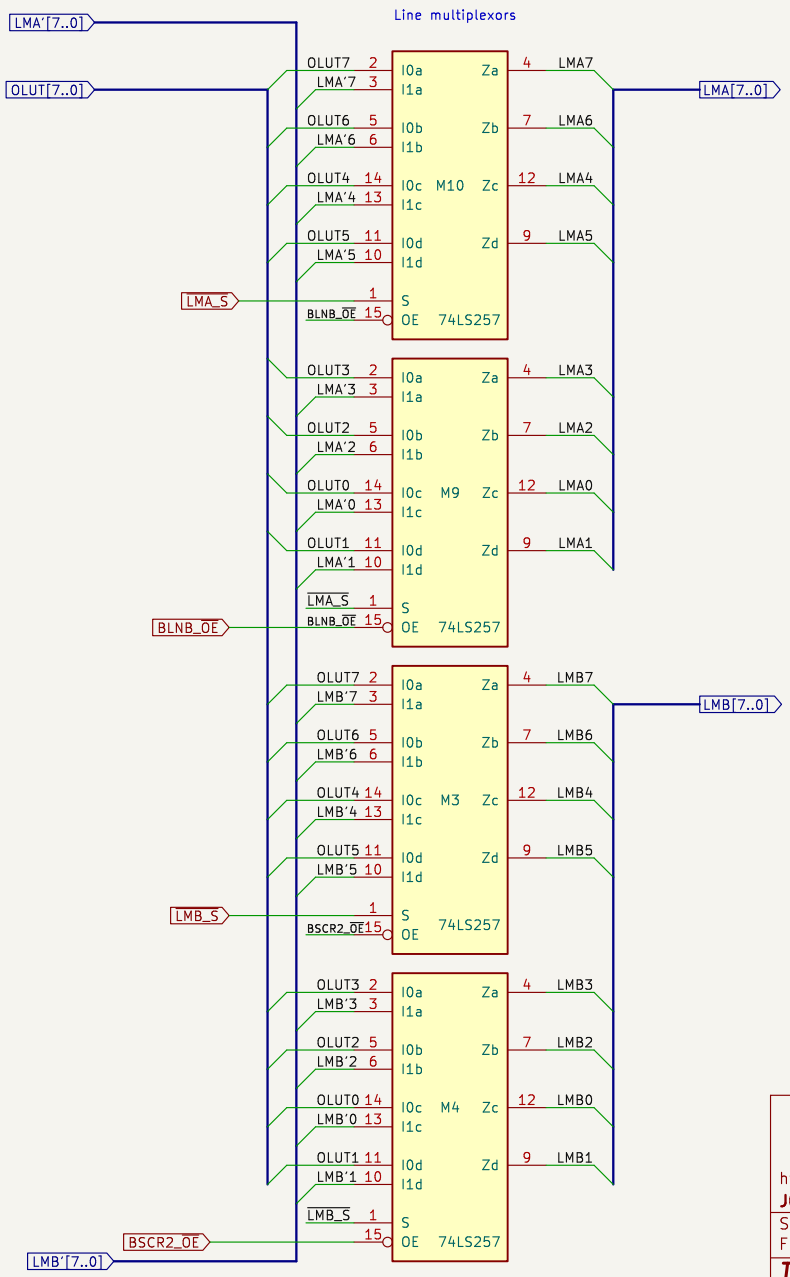

https://patreon.com/topapate
JOTEGO

Sheet: /video/obj_counters/mux/
File: mux.kicad_sch

Title: Exed Exes board B

Size: A4	Date: 2021	**Rev: José Tejada**
KiCad E.D.A. 8.0.9		Id: 28/28