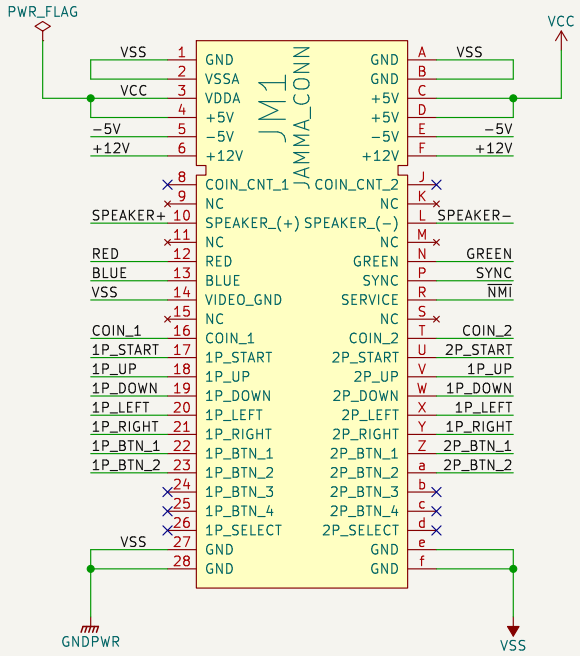

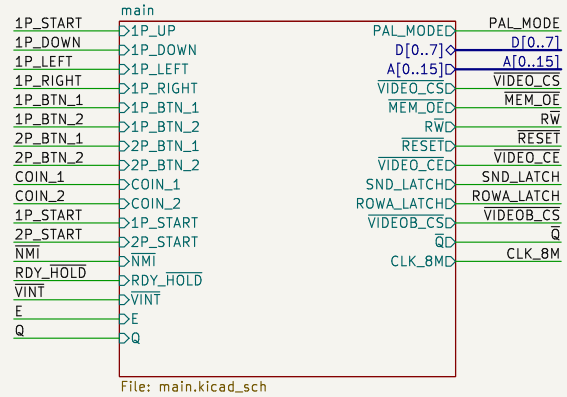

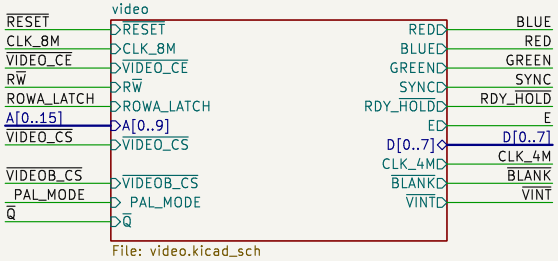

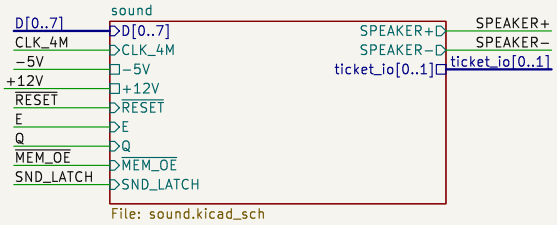

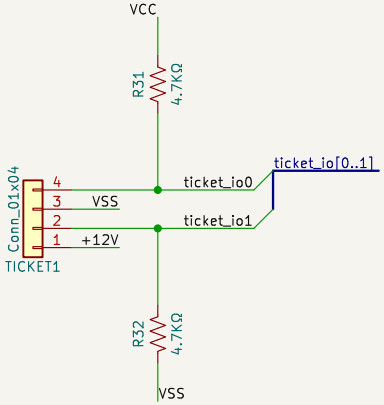

JOTEGO

JOTEGO

Sheet: /

File: bowl.kicad_sch

Title: Beer Frame Bowling

Size: A4	Date: 2022-06-06	**Rev: José Tejada G.**
KiCad E.D.A. 8.0.9		Id: 1/5

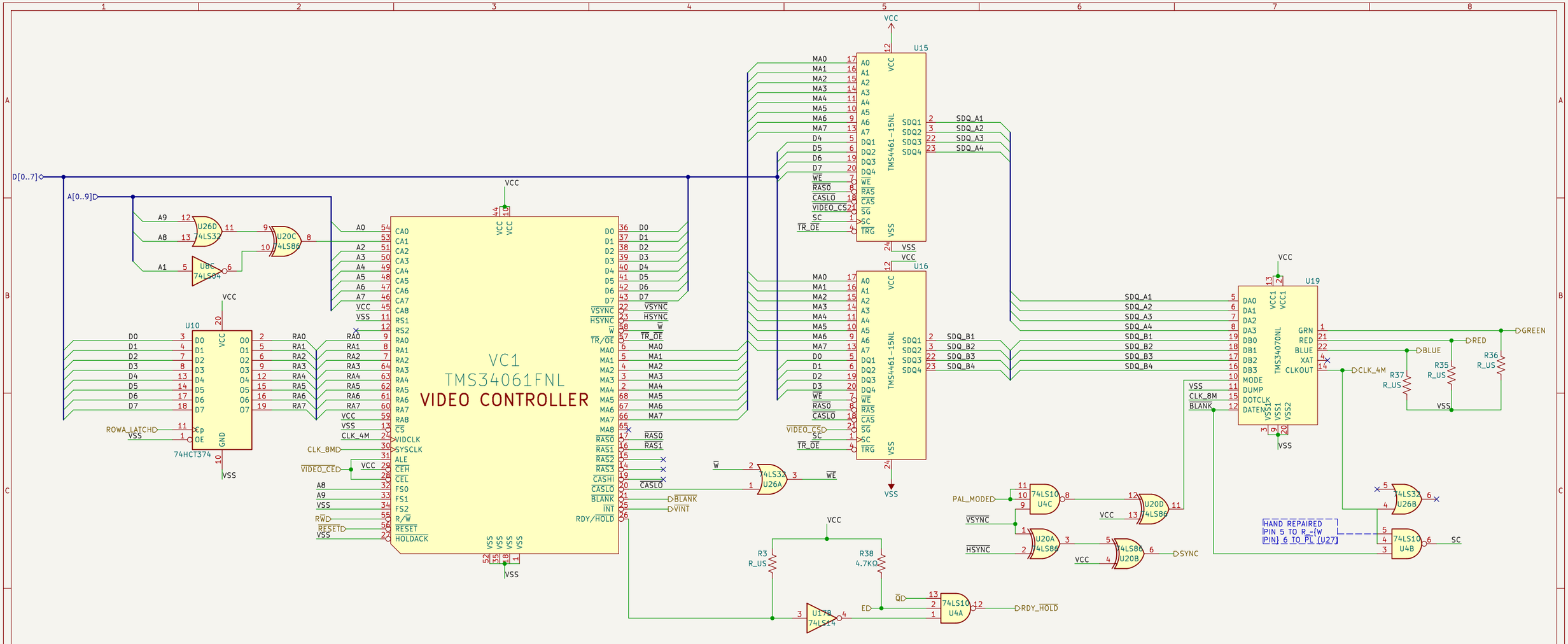

JOTEGO

JOTEGO

Sheet: /video/

File: video.kicad_sch

Title: Beer Frame Bowling

Size: A3	Date: 2022-06-06	**Rev: José Tejada G.**
KiCad E.D.A. 8.0.9		Id: 2/5

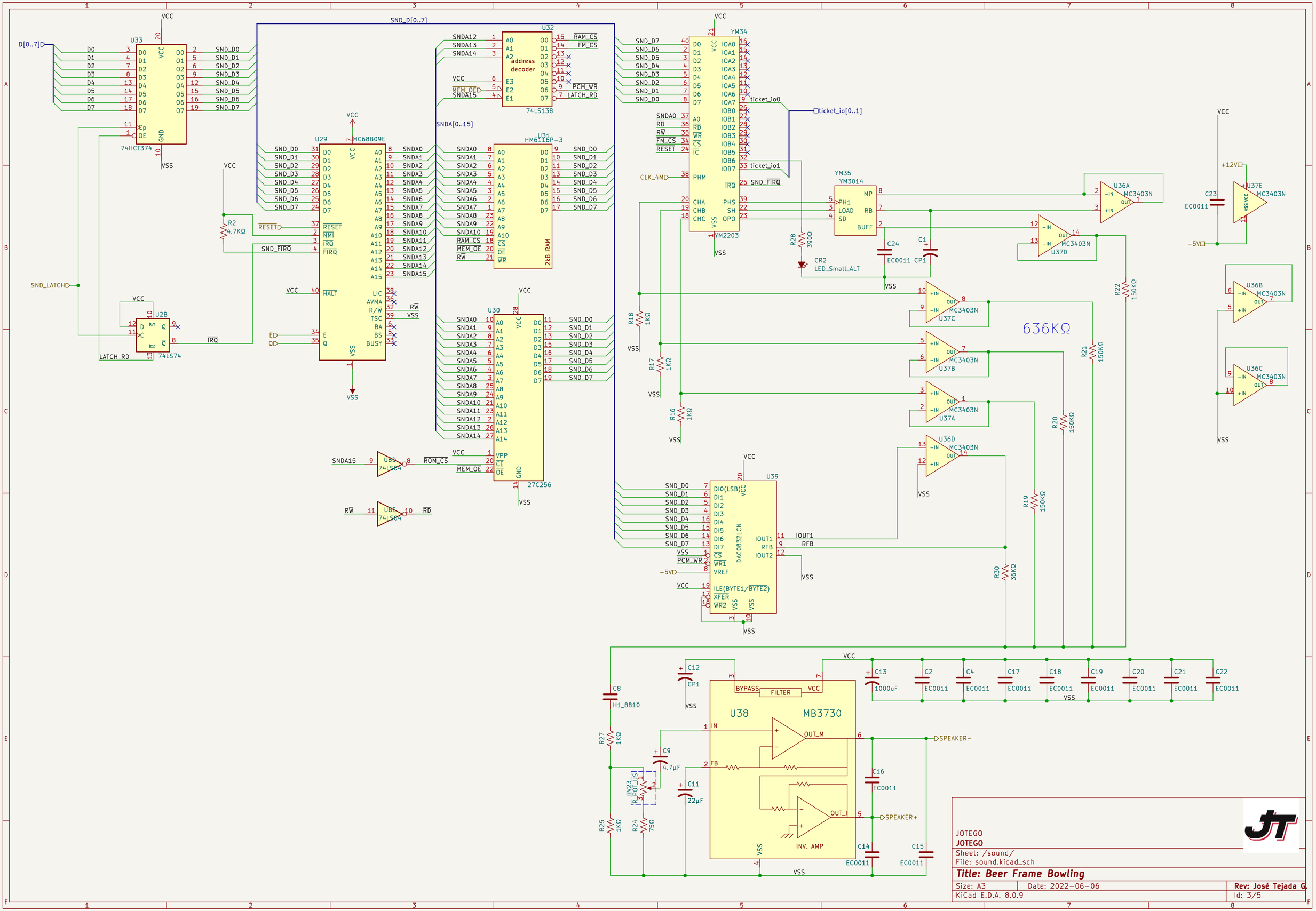

JOTEGO
JOTEGO
Sheet: /sound/
File: sound.kicad_sch
Title: Beer Frame Bowling
Size: A3 | Date: 2022-06-06 | Rev: José Tejada G.
KiCad E.D.A. 8.0.9 | Id: 3/5

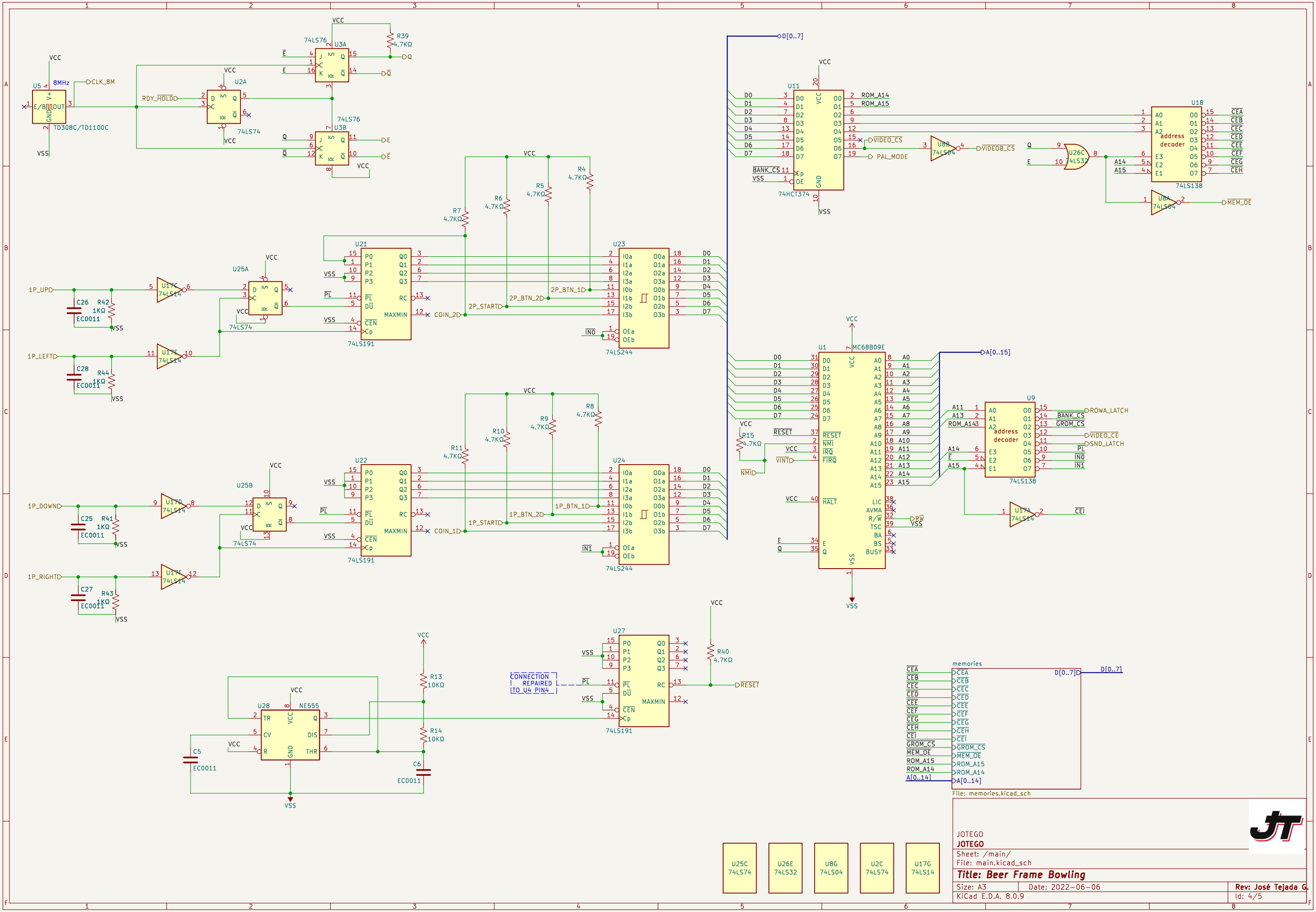

U5
8MHz
CLK_8M
TD308C/TD1100C
RDY_HOLD
U2A
74LS74
74LS76
U3A
U3B
R39
4.7KΩ
U11
74HCT374
ROM_A14
ROM_A15
VIDEO_CS
PAL_MODE
U8B
74LS04
VIDEOB_CS
U26C
74LS32
U18
74LS138
address decoder
U8A
MEM_OE
D[0..7]
U21
74LS191
U23
74LS244
U25A
U25B
U17C
U17E
U17D
U17F
1P_UP
1P_LEFT
1P_DOWN
1P_RIGHT
C26
C28
C25
C27
R42
R44
R41
R43
1KΩ
EC0011
U22
U24
U1
MC68B09E
A[0..15]
U9
74LS138
ROWA_LATCH
BANK_CS
GROM_CS
VIDEO_CE
SND_LATCH
U17A
R15
4.7KΩ
U27
74LS191
R40
4.7KΩ
RESET
CONNECTION REPAIRED TO U4 PIN4
U28
NE555
R13
10KΩ
R14
10KΩ
C5
C6
memories
File: memories.kicad_sch
U25C 74LS74
U26E 74LS32
U8G 74LS04
U2C 74LS74
U17G 74LS14
JOTEGO
JOTEGO
Sheet: /main/
File: main.kicad_sch
Title: Beer Frame Bowling
Size: A3
Date: 2022-06-06
Rev: José Tejada G.
KiCad E.D.A. 8.0.9
Id: 4/5

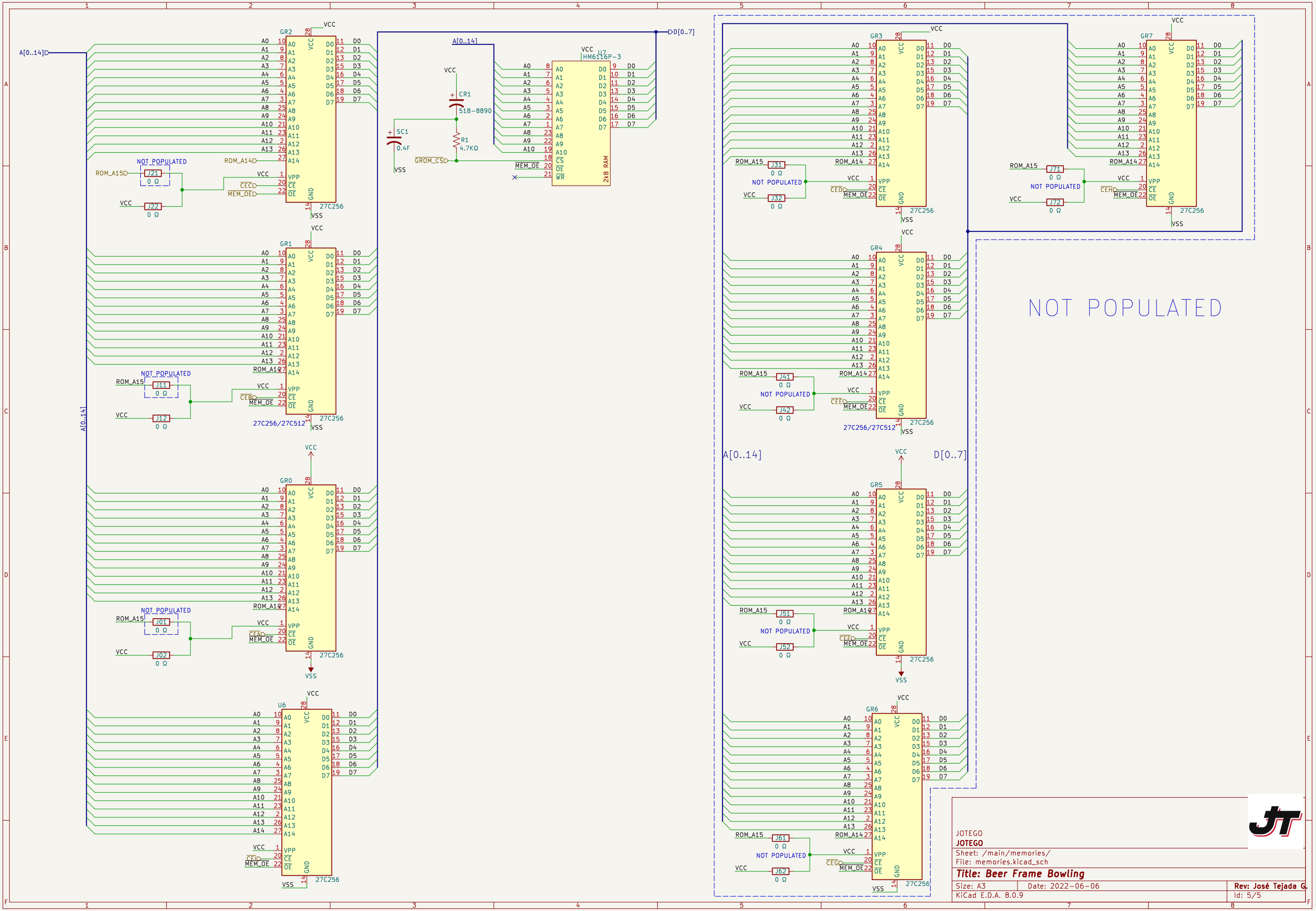

JOTEGO

JOTEGO

Sheet: /main/memories/

File: memories.kicad_sch

Title: Beer Frame Bowling

Size: A3	Date: 2022-06-06	**Rev: José Tejada G.**
KiCad E.D.A. 8.0.9		Id: 5/5