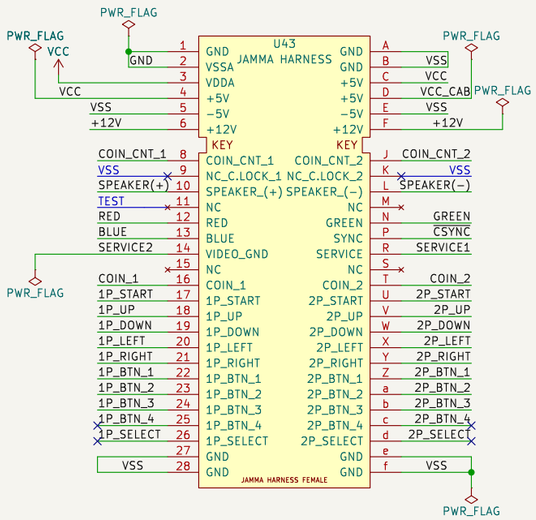

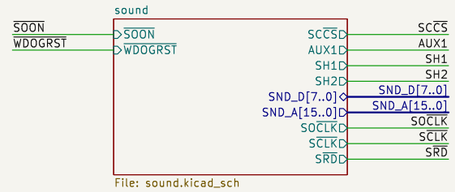

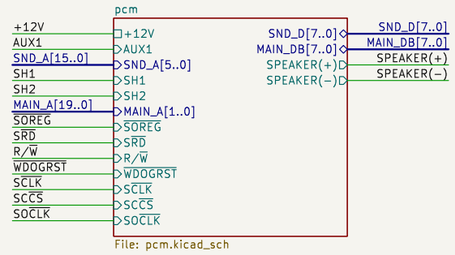

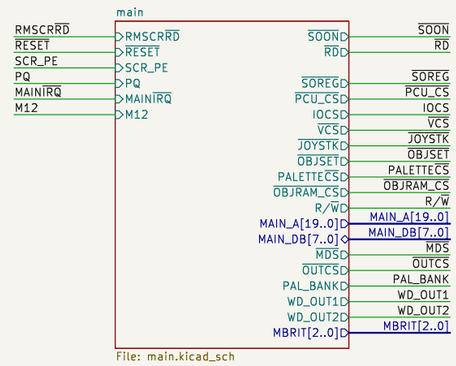

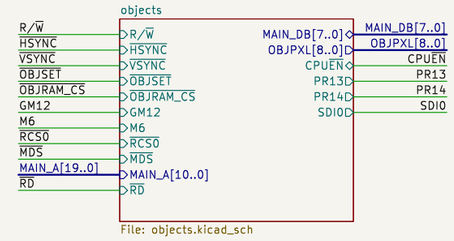

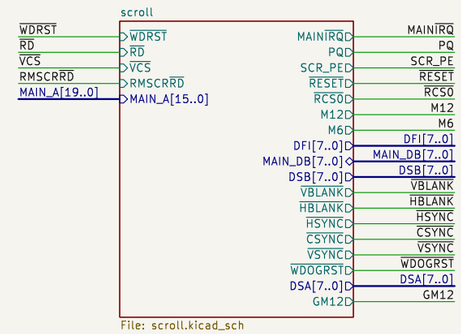

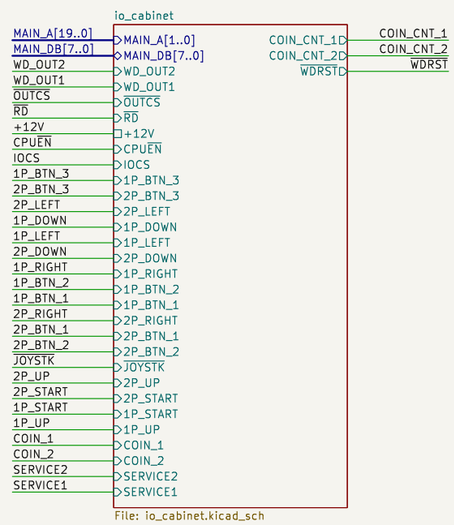

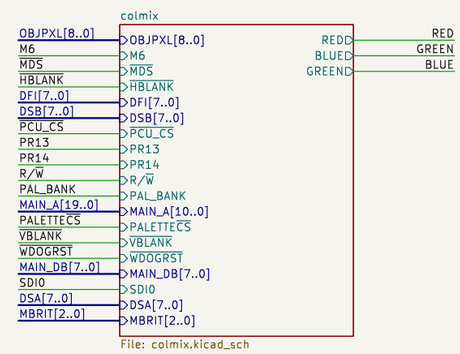

JOTEGO
www.patreon.com/jotego
JOTEGO

Sheet: /
File: parodius.kicad_sch

Title: Parodius Da!

Size: A3	Date: 2023-05-09	**Rev: José Tejada G.**
KiCad E.D.A. 8.0.9		Id: 1/11

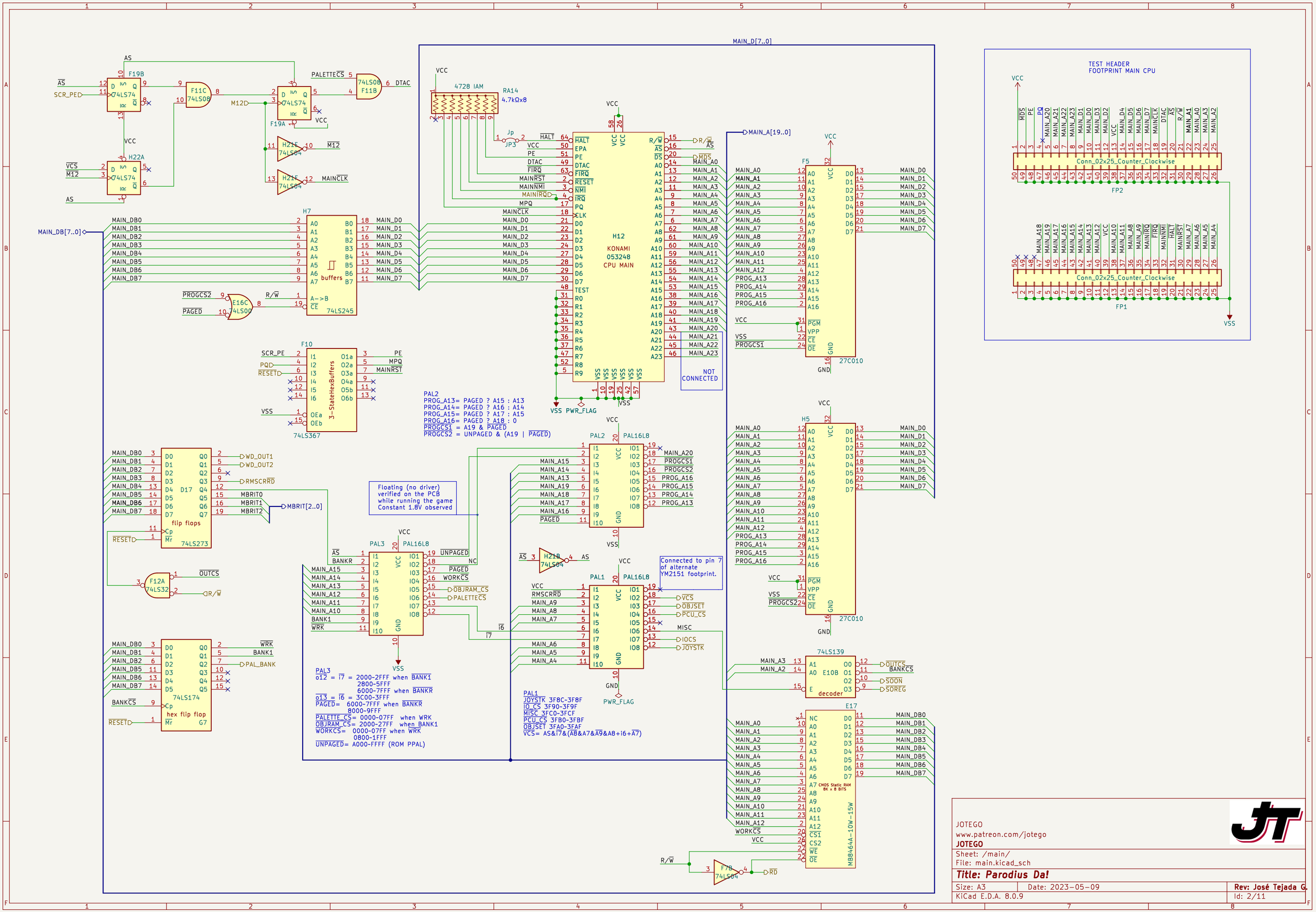

JOTEGO
www.patreon.com/jotego
JOTEGO

Sheet: /main/
File: main.kicad_sch

Title: Parodius Da!

Size: A3	Date: 2023-05-09	**Rev: José Tejada G.**
KiCad E.D.A. 8.0.9		Id: 2/11

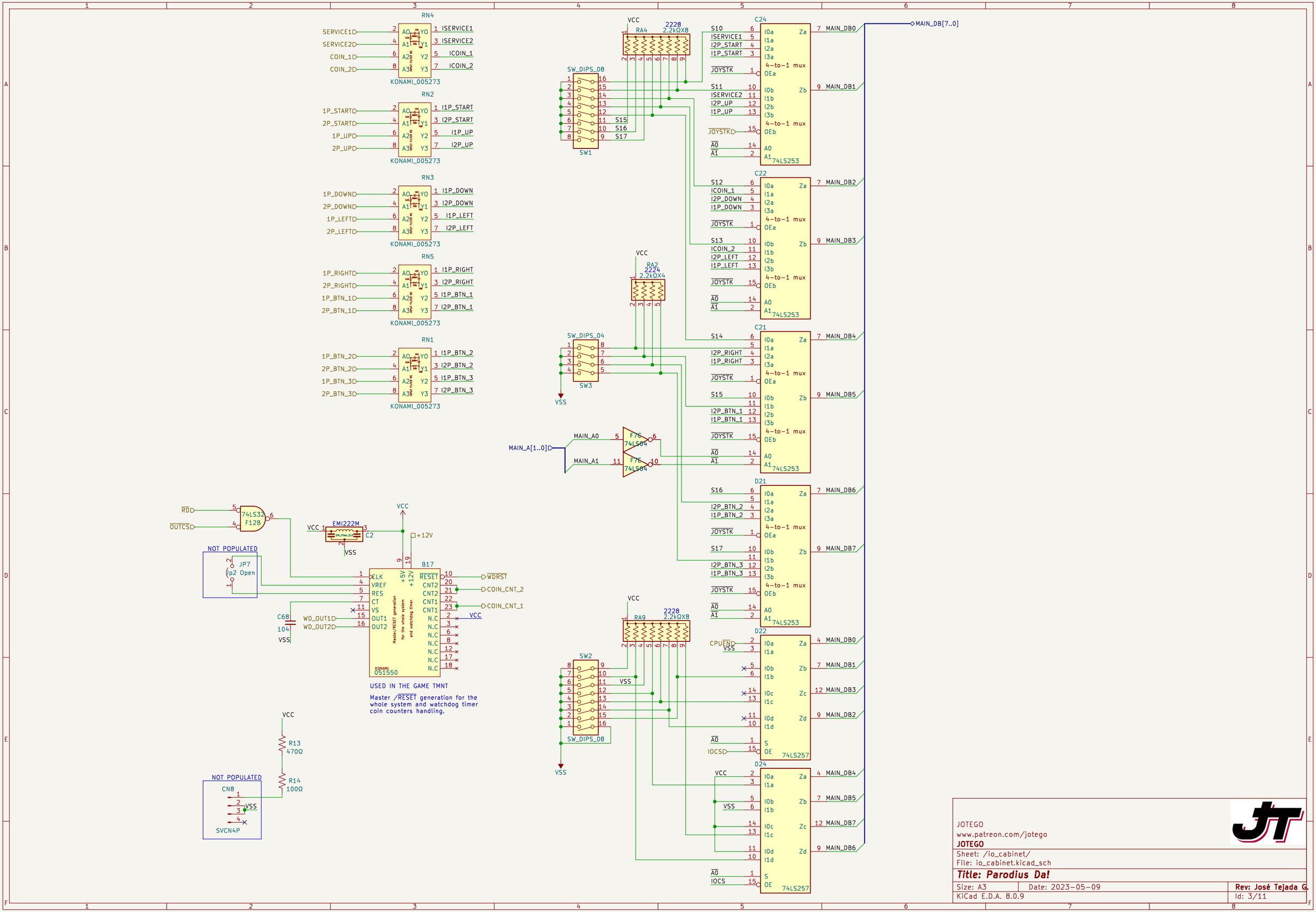

JOTEGO
www.patreon.com/jotego
JOTEGO

Sheet: /io_cabinet/
File: io_cabinet.kicad_sch

Title: Parodius Da!

Size: A3	Date: 2023-05-09	**Rev: José Tejada G.**
KiCad E.D.A. 8.0.9		Id: 3/11

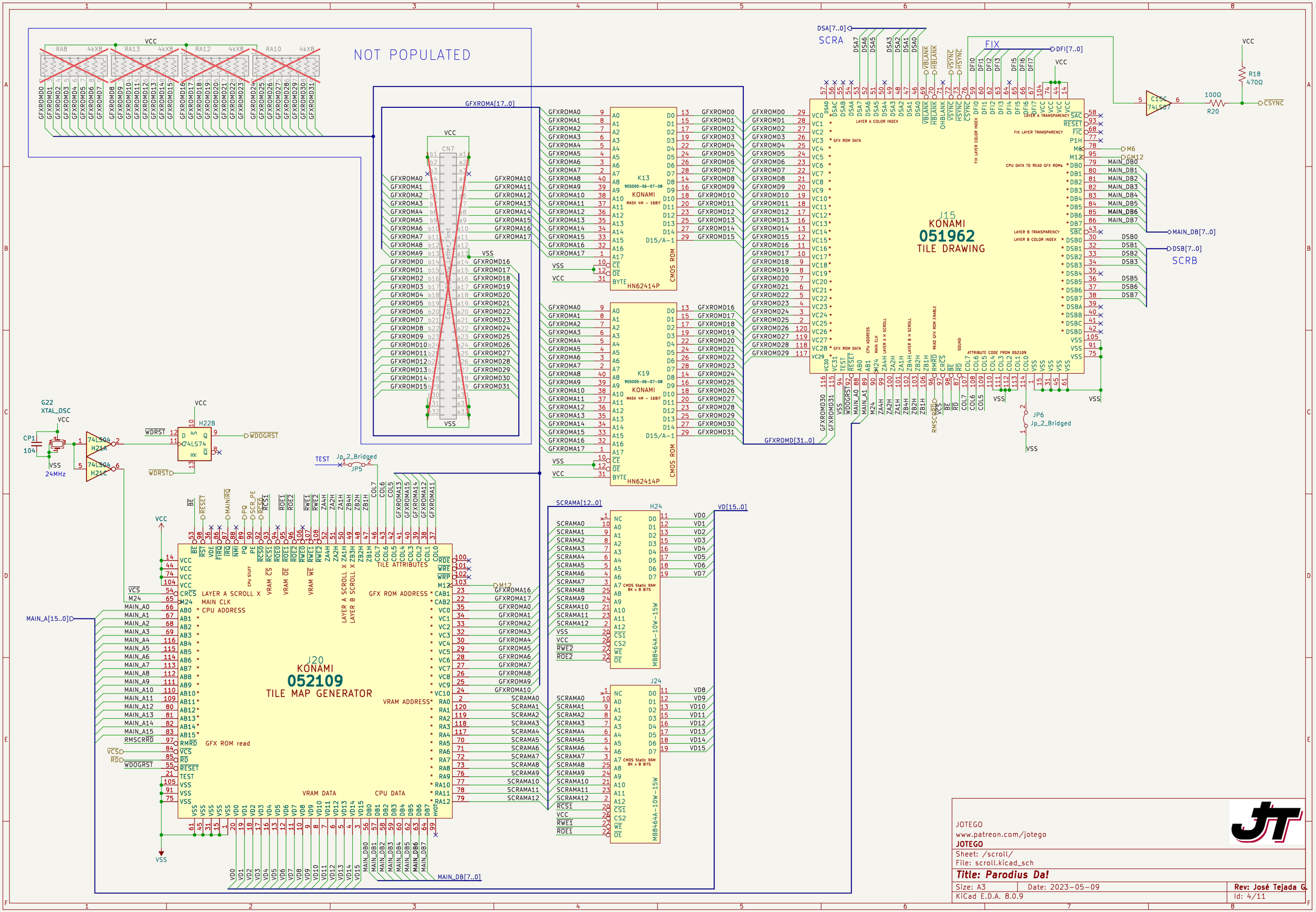

JOTEGO
www.patreon.com/jotego
JOTEGO

Sheet: /scroll/
File: scroll.kicad_sch

Title: Parodius Da!

Size: A3	Date: 2023-05-09	**Rev: José Tejada G.**
KiCad E.D.A. 8.0.9		Id: 4/11

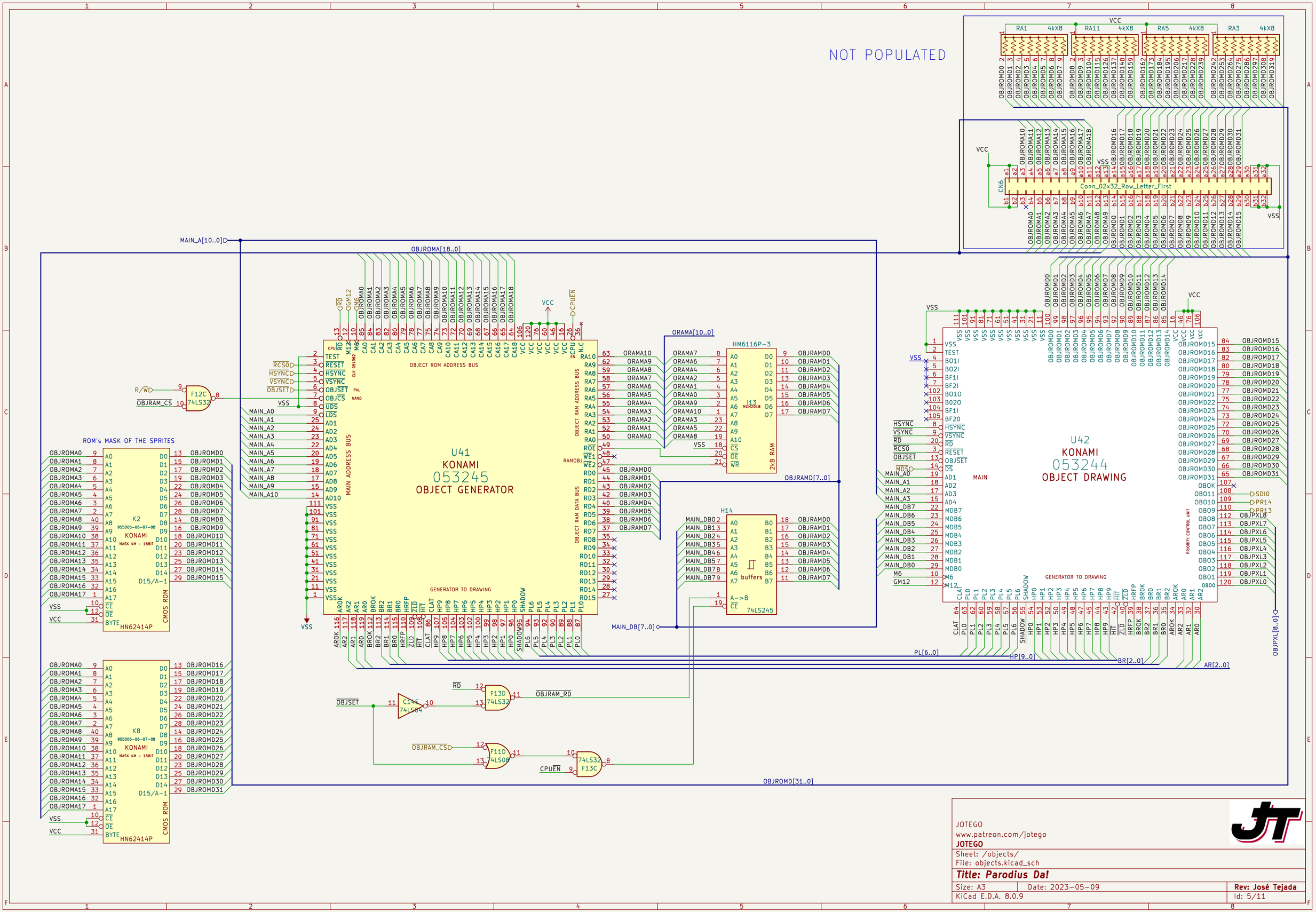

JOTEGO
www.patreon.com/jotego
JOTEGO

Sheet: /objects/
File: objects.kicad_sch

Title: Parodius Da!

Size: A3	Date: 2023-05-09	**Rev: José Tejada**
KiCad E.D.A. 8.0.9		Id: 5/11

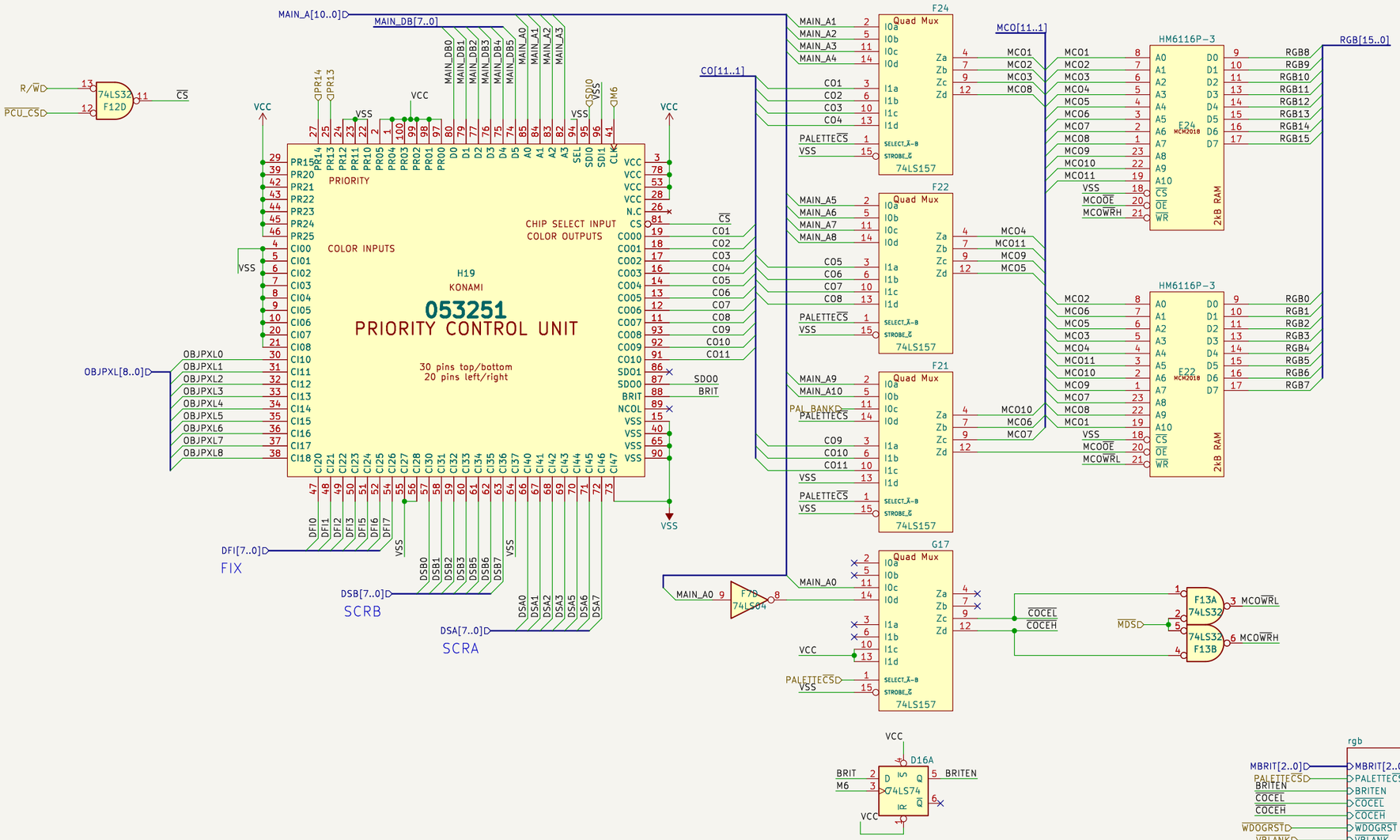

JOTEGO
www.patreon.com/jotego
JOTEGO

Sheet: /colmix/
File: colmix.kicad_sch

Title: Parodius Da!

Size: A3	Date: 2023-05-09	**Rev: José Tejada G.**
KiCad E.D.A. 8.0.9		Id: 6/11

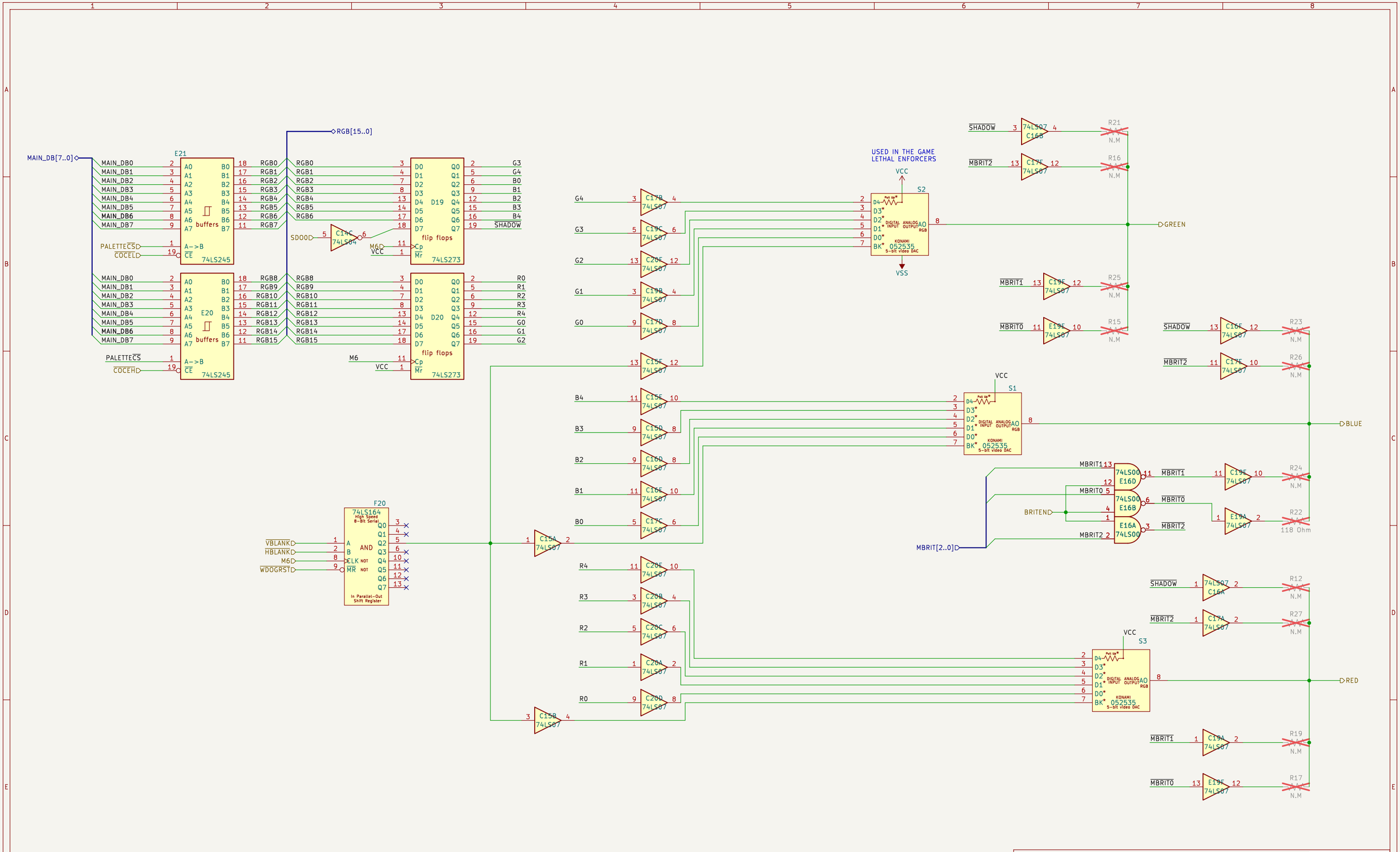

JOTEGO
www.patreon.com/jotego
JOTEGO

Sheet: /colmix/rgb/
File: rgb.kicad_sch

Title: Parodius Da!

Size: A3	Date: 2023-05-09	**Rev: José Tejada G.**
KiCad E.D.A. 8.0.9		Id: 7/11

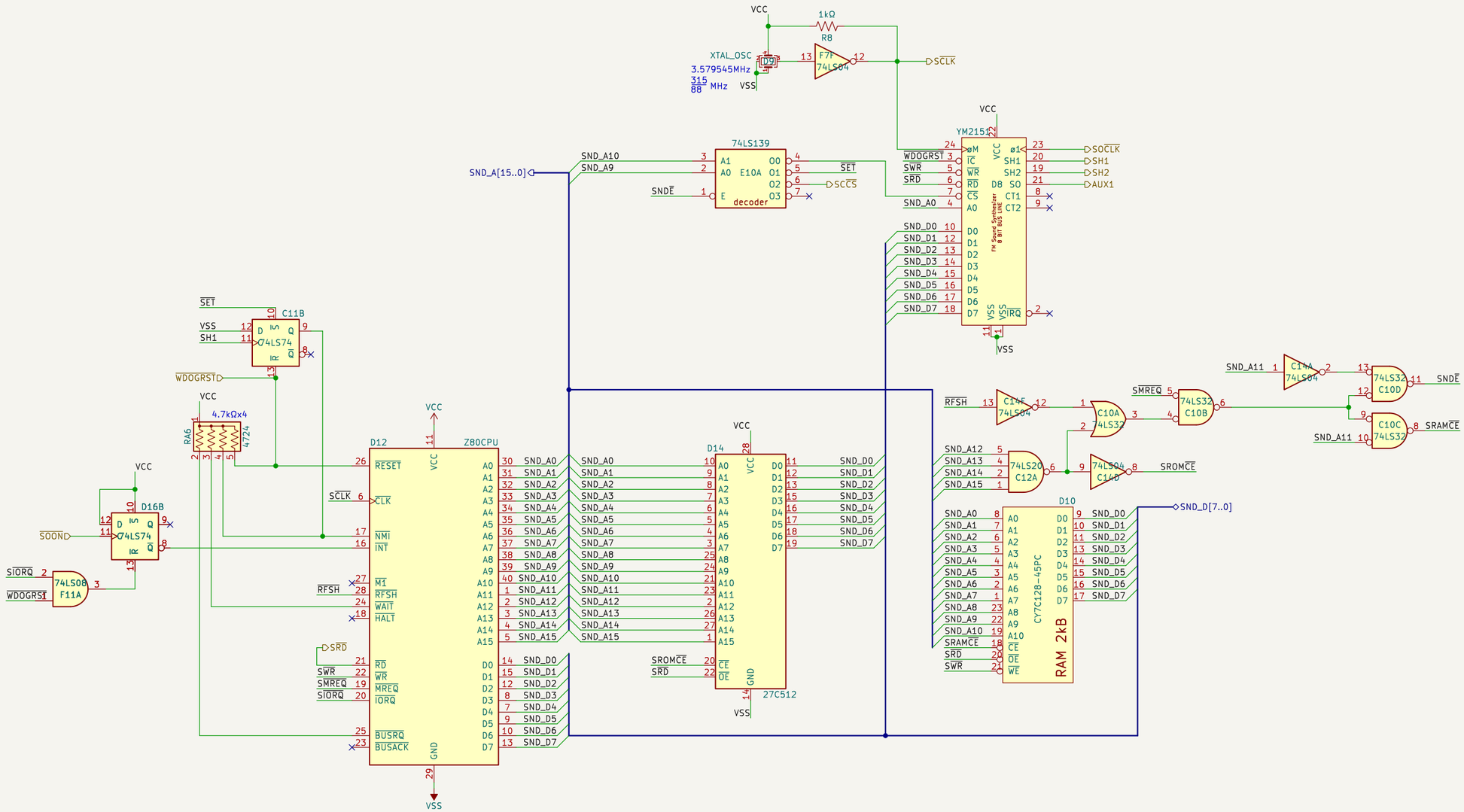

JOTEGO
www.patreon.com/jotego
JOTEGO

Sheet: /sound/
File: sound.kicad_sch

Title: Parodius Da!

Size: A3	Date: 2023-05-09	**Rev: José Tejada G.**
KiCad E.D.A. 8.0.9		Id: 8/11

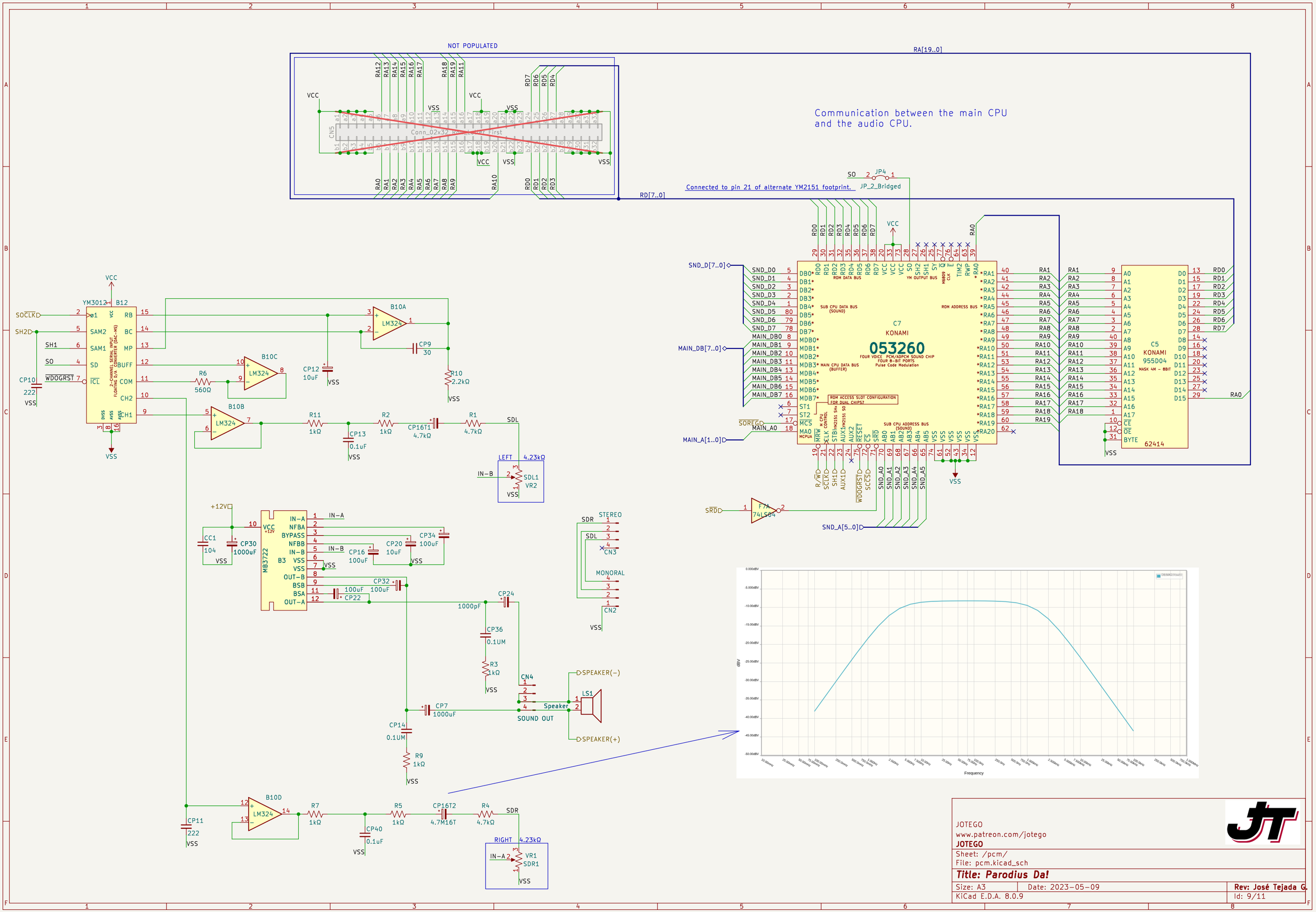

JOTEGO
www.patreon.com/jotego
JOTEGO

Sheet: /pcm/
File: pcm.kicad_sch

Title: Parodius Da!

Size: A3	Date: 2023-05-09	**Rev: José Tejada G.**
KiCad E.D.A. 8.0.9		Id: 9/11

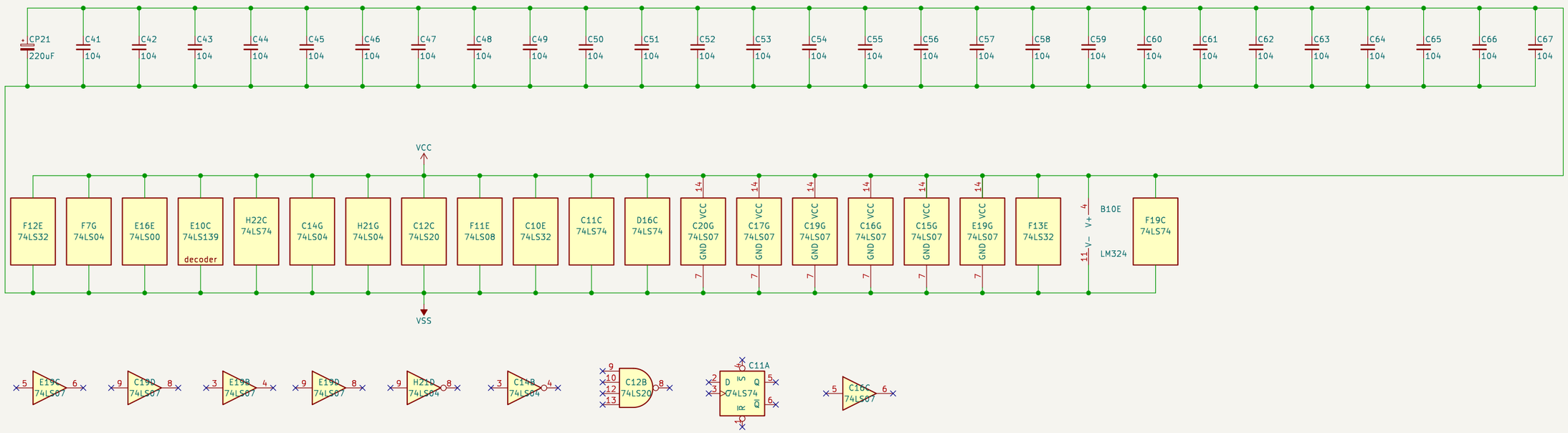

JOTEGO
www.patreon.com/jotego
JOTEGO

Sheet: /capacitors/
File: capacitors.kicad_sch

Title: Parodius Da!

Size: A3	Date: 2023-05-09	**Rev: José Tejada G.**
KiCad E.D.A. 8.0.9		Id: 10/11

Parodius / Parodius DA!
1990

Parodius! From Myth to Laughter, released in Japan as Parodius Da!
Shinwa kara Owarai e[a] and outside Japan as Parodius
(from "Parody Gradius"), is a shoot 'em up arcade video game and the
second title in the Parodius series produced by Konami.
The European SNES version is also known as Parodius: Non-Sense Fantasy.
The gameplay is stylistically very similar to the Gradius series, but
the graphics and music are intentionally absurd.
As a result of its localised title, From Myth to Laughter is often
mistaken as the original game of the series. The lesser known original game,
Parodius: The Octopus Saves the Earth, was released for the MSX computer in
Japan.

HARDWARE DESCRIPTION

Video Hardware : 052109 051962 053245 053244 053251
CPU : 053248
KNOWN KONAMI TMNT2 BASED GAME LIST
Detana!! Twin Bee / Bells & Whistles / Here Comes Twinbee!!
Golfing Greats
Lightning Fighters / Trigon
Parodius / Parodius DA!
Premier Soccer
Quiz Gakumon no Susume
Rollergames
Sunset Riders
Surprise Attack
Teenage Mutant Ninja Turtles : Turtles in Time

Sequels : Gokujyou Parodius / Fantastic Journey (1994)
Sexy Parodius (1996)

Source: System 16 The Arcade Museum
wikipedia.org/wiki/Parodius_Da!