CONEXION OF THE BIT 15 IS IN DUBT OF BEING SOMENTHING.
-CHECK MAME REPORT.
-CHECK CABINET PAGE.

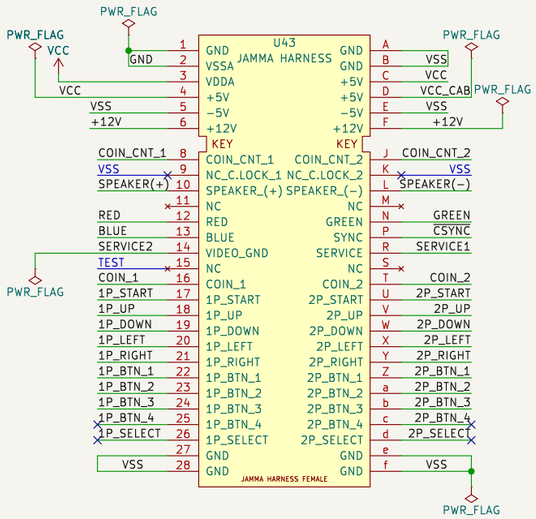


## sound

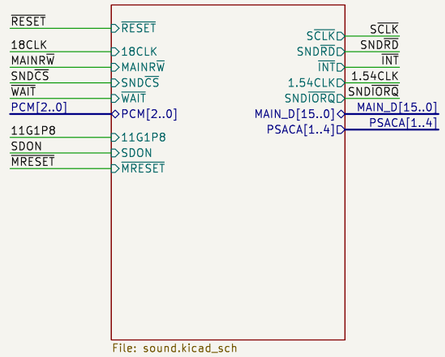


File: sound.kicad_sch

## io_cabinet

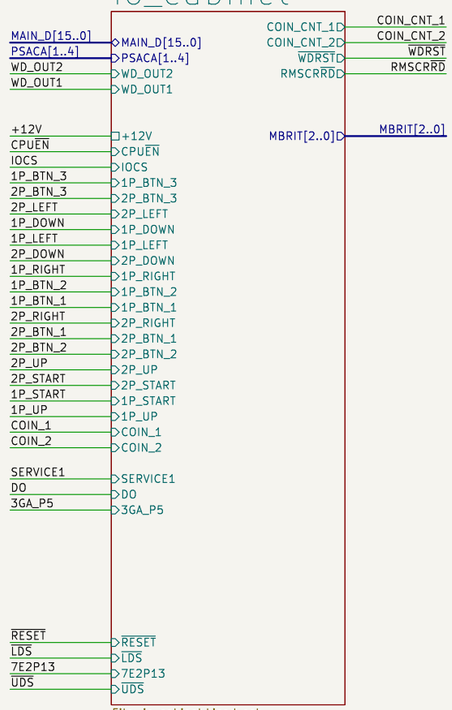


File: io_cabinet.kicad_sch

## main

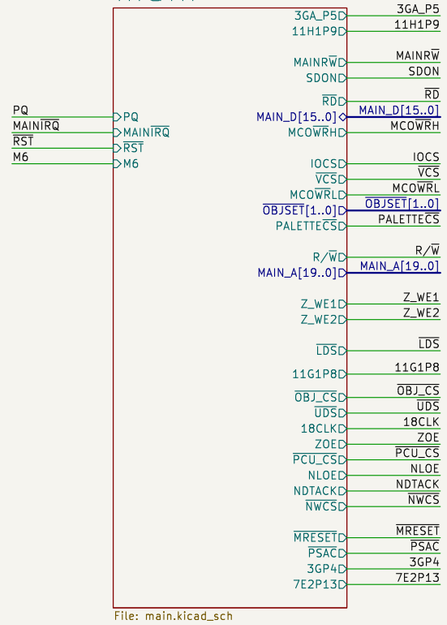


File: main.kicad_sch

## capacitors

File: capacitors.kicad_sch

## psac

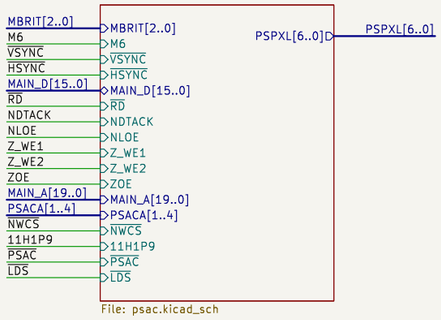


File: psac.kicad_sch

## objects

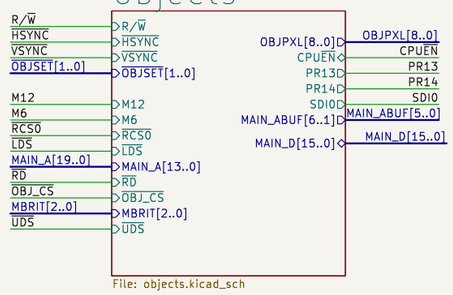


File: objects.kicad_sch

## scroll

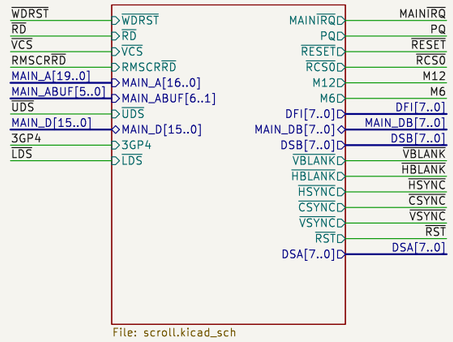


File: scroll.kicad_sch

## colmix

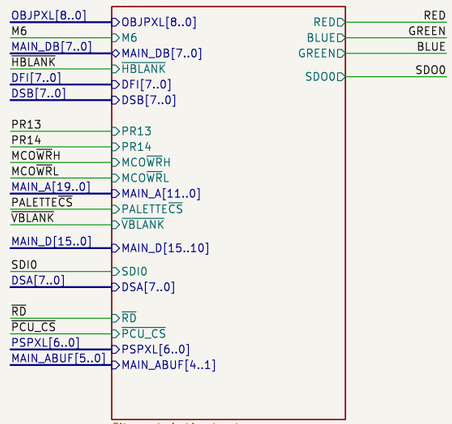


File: colmix.kicad_sch

JOTEGO
www.patreon.com/jotego
**JOTEGO**

Sheet: /
File: prmrsocr.kicad_sch

**Title: Premier Soccer**

| | | |
|---|---|---|
| Size: A3 | Date: 2025-12-15 | **Rev: José Tejada G.** |
| KiCad E.D.A. 8.0.9 | | Id: 1/11 |

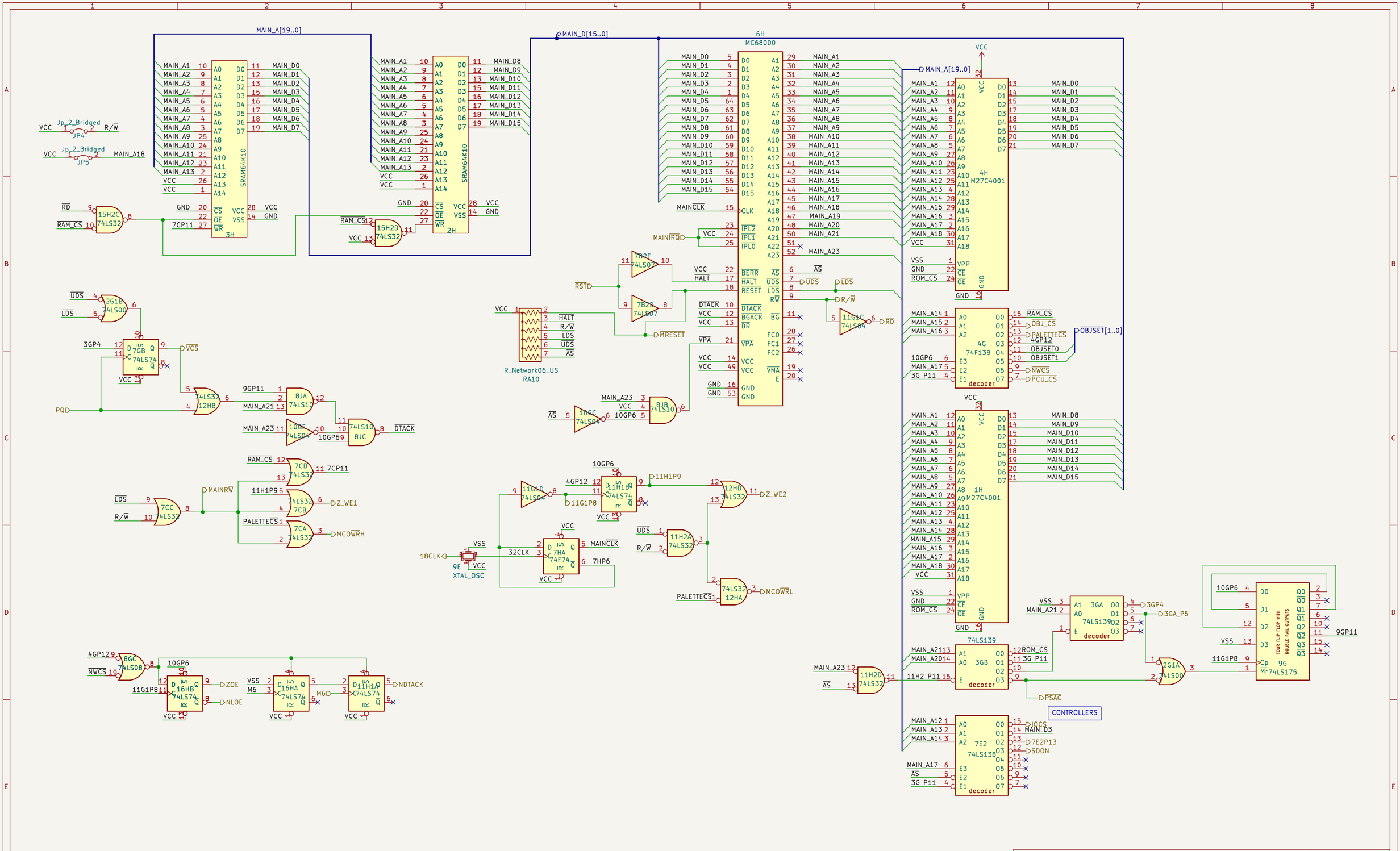


JOTEGO
www.patreon.com/jotego
**JOTEGO**

Sheet: /main/
File: main.kicad_sch

***Title: Premier Soccer***

| | | |
|---|---|---|
| Size: A3 | Date: 2025-12-15 | **Rev: José Tejada G.** |
| KiCad E.D.A. 8.0.9 | | Id: 2/11 |

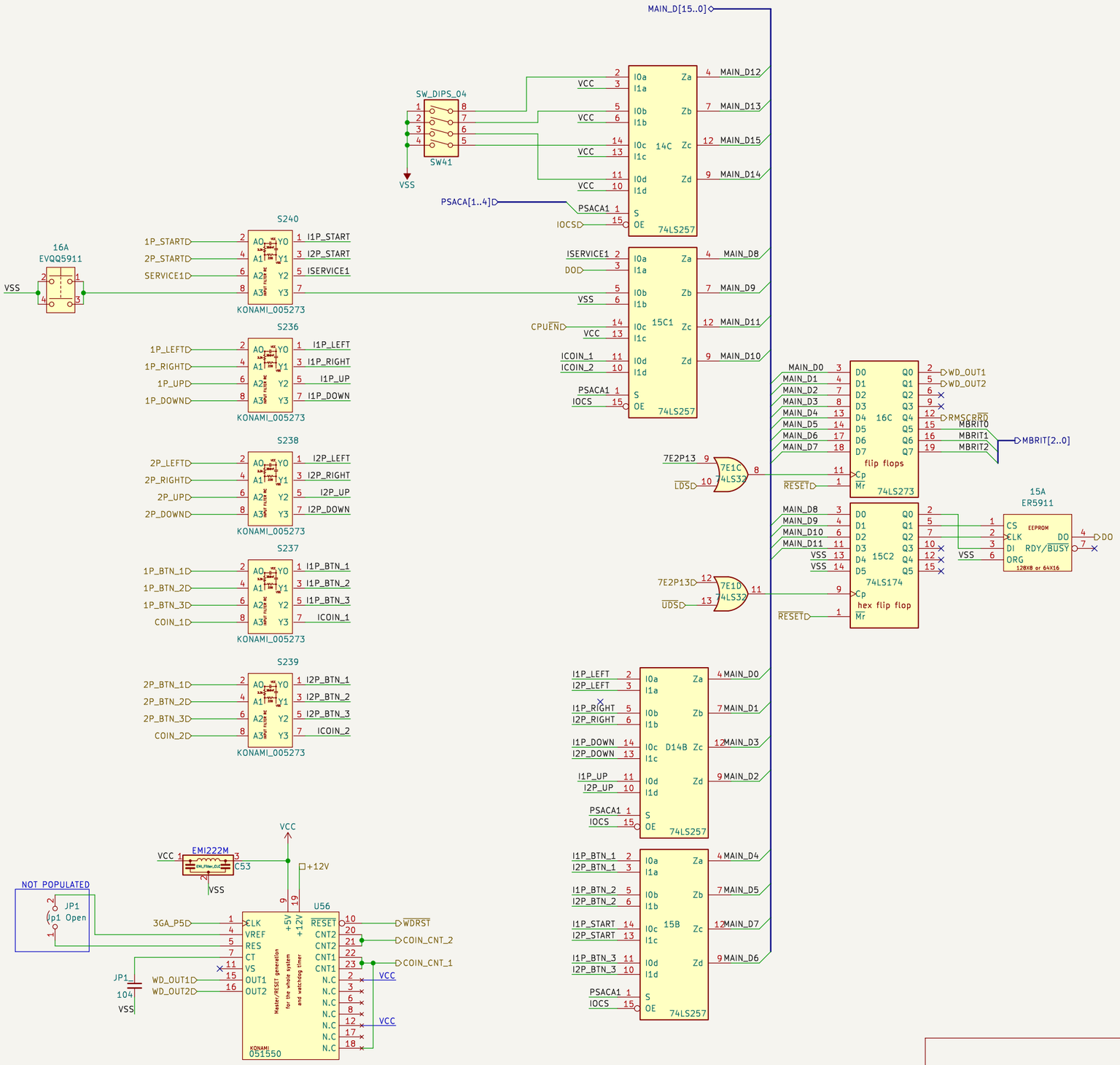


JOTEGO
www.patreon.com/jotego
**JOTEGO**

Sheet: /io_cabinet/
File: io_cabinet.kicad_sch

***Title: Premier Soccer***

| | | |
|---|---|---|
| Size: A3 | Date: 2025-12-15 | **Rev: José Tejada G.** |
| KiCad E.D.A. 8.0.9 | | Id: 3/11 |

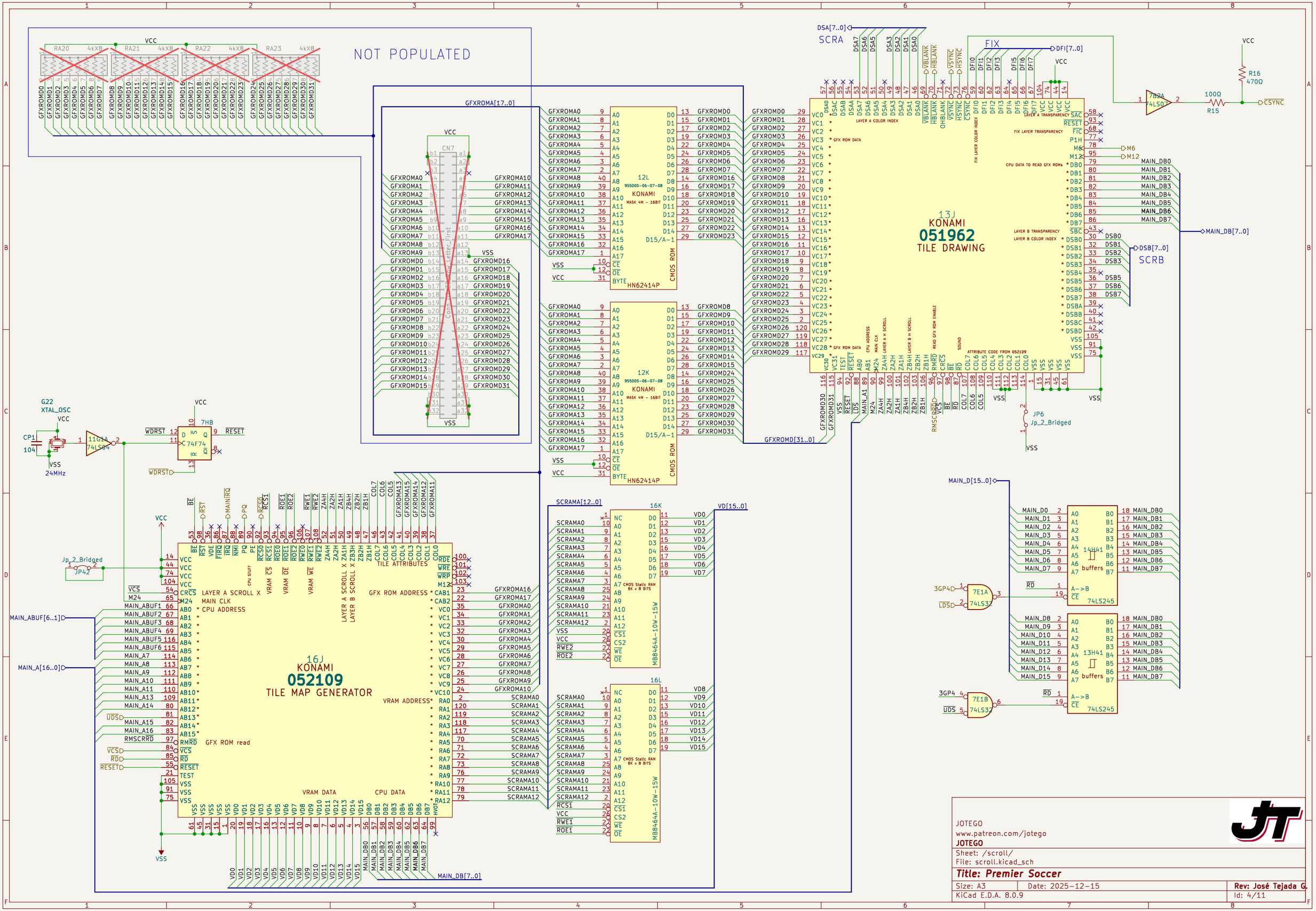


JOTEGO
www.patreon.com/jotego
**JOTEGO**

Sheet: /scroll/
File: scroll.kicad_sch

**Title: Premier Soccer**

| | | |
|---|---|---|
| Size: A3 | Date: 2025-12-15 | Rev: José Tejada G. |
| KiCad E.D.A. 8.0.9 | | Id: 4/11 |

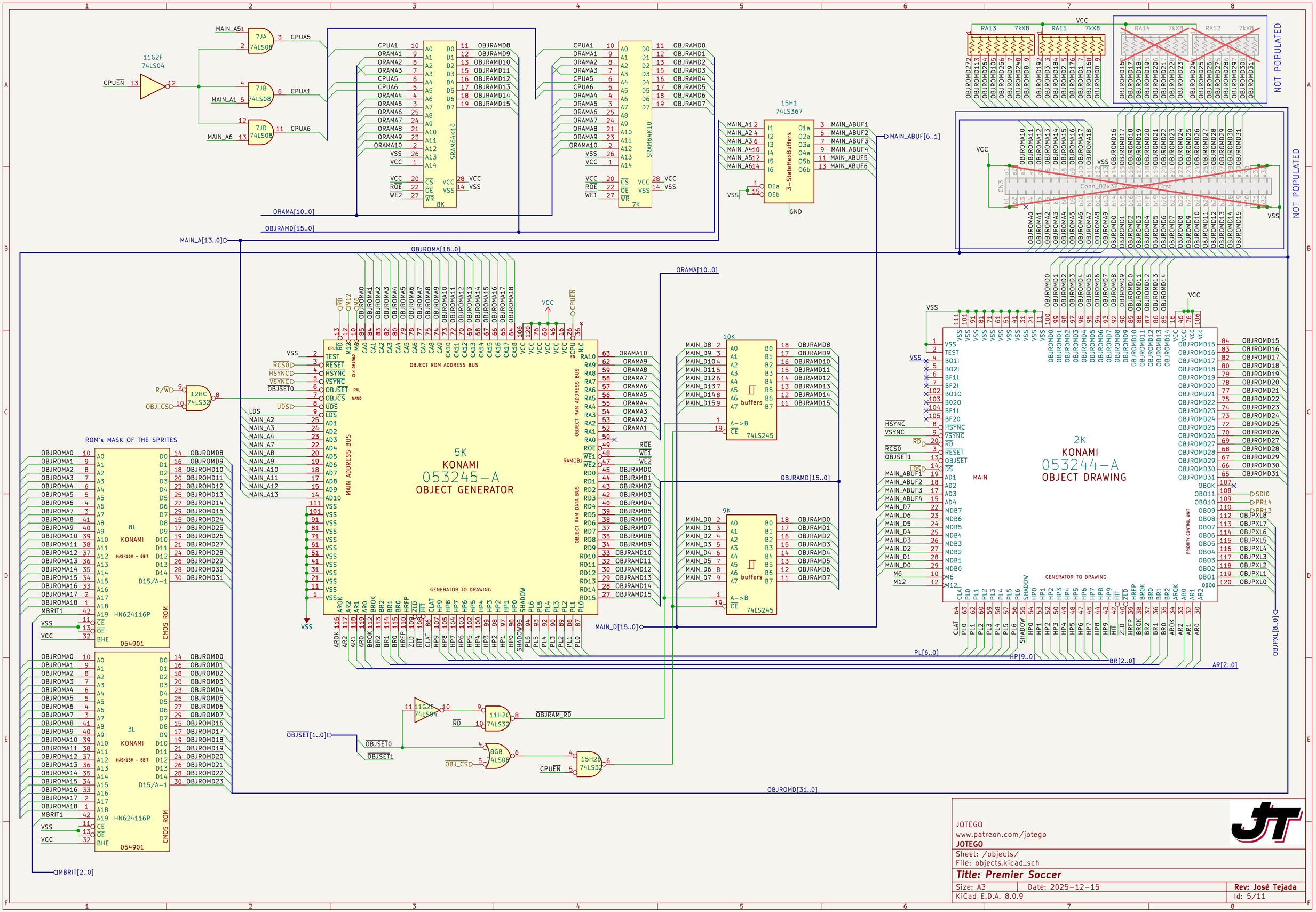


JOTEGO
www.patreon.com/jotego
**JOTEGO**

Sheet: /objects/
File: objects.kicad_sch

***Title: Premier Soccer***

| | | |
|---|---|---|
| Size: A3 | Date: 2025-12-15 | **Rev: José Tejada** |
| KiCad E.D.A. 8.0.9 | | Id: 5/11 |

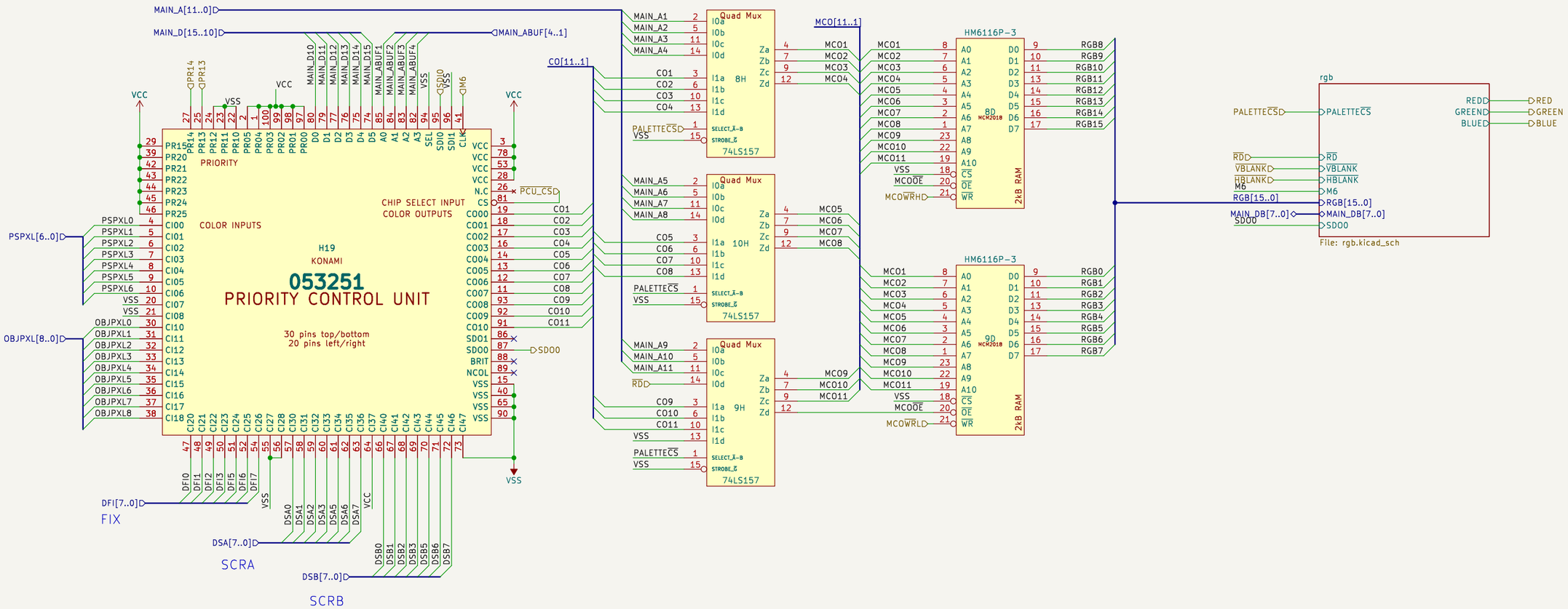


JOTEGO
www.patreon.com/jotego
**JOTEGO**

Sheet: /colmix/
File: colmix.kicad_sch

***Title: Premier Soccer***

| | | |
|---|---|---|
| Size: A3 | Date: 2025-12-15 | **Rev: José Tejada G.** |
| KiCad E.D.A. 8.0.9 | | Id: 6/11 |

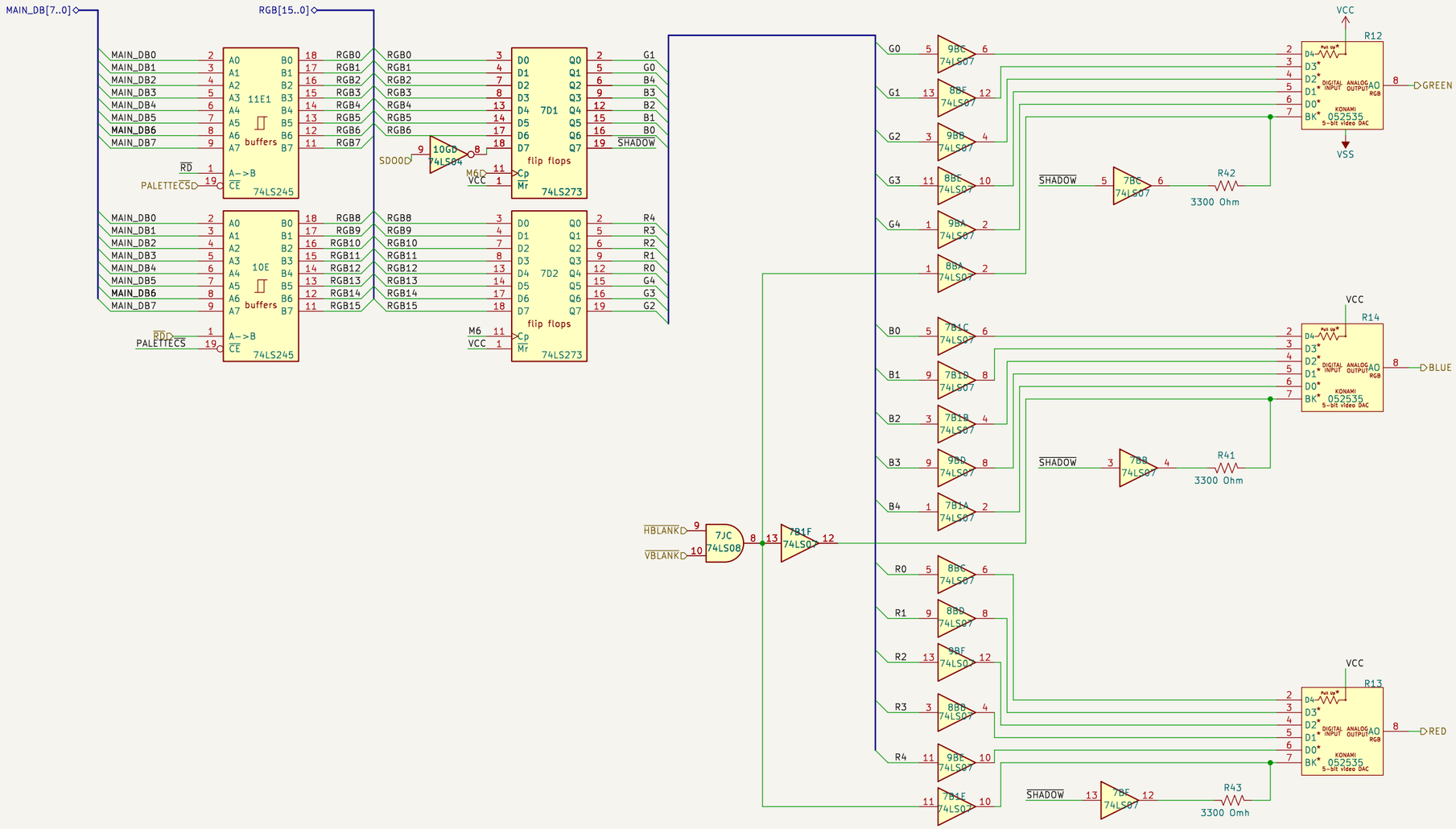


JOTEGO
www.patreon.com/jotego
**JOTEGO**

Sheet: /colmix/rgb/
File: rgb.kicad_sch

***Title: Premier Soccer***

| | | |
|---|---|---|
| Size: A3 | Date: 2025-12-15 | **Rev: José Tejada G.** |
| KiCad E.D.A. 8.0.9 | | Id: 7/11 |

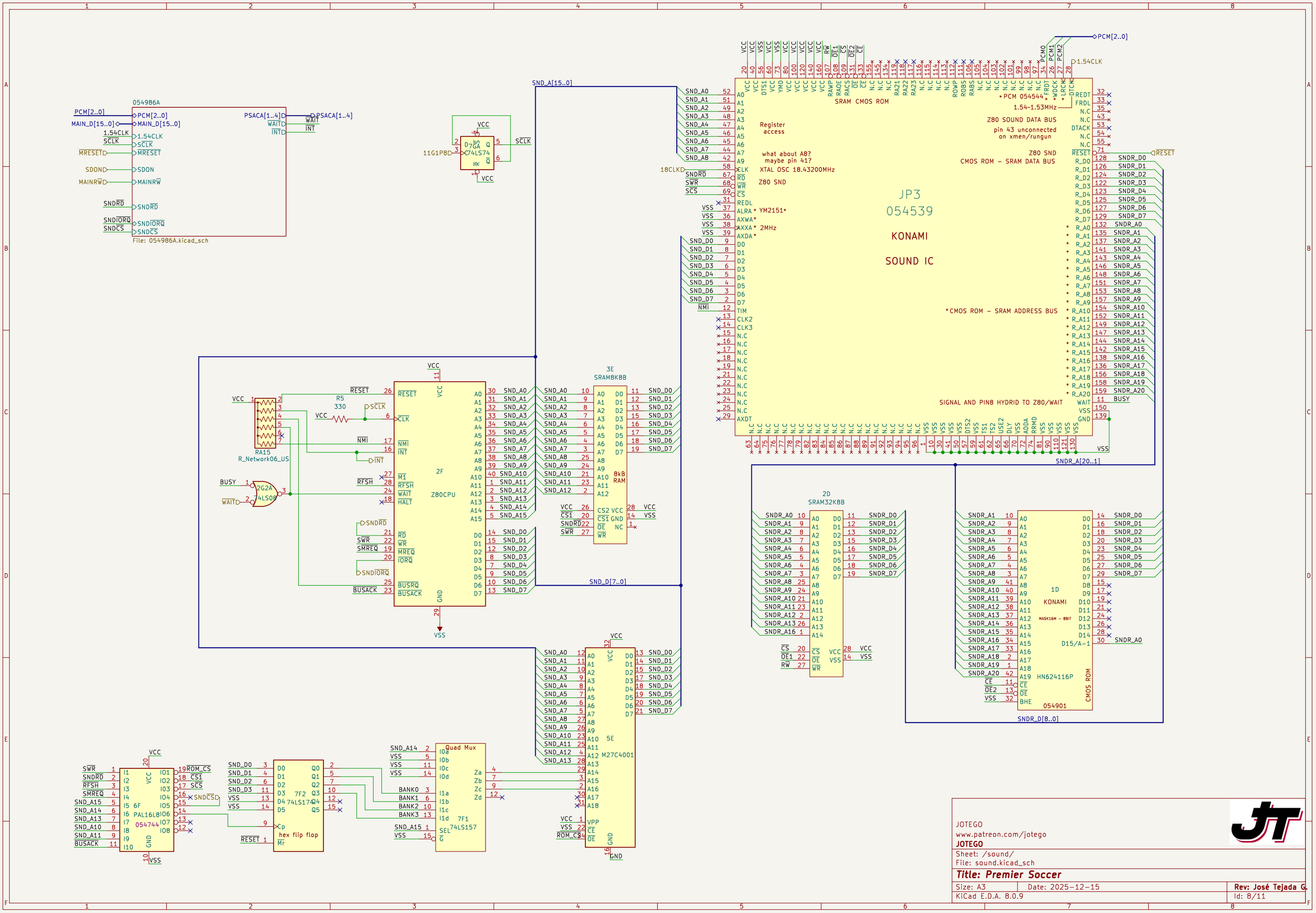


JOTEGO
www.patreon.com/jotego
**JOTEGO**

Sheet: /sound/
File: sound.kicad_sch

***Title: Premier Soccer***

| | | |
|---|---|---|
| Size: A3 | Date: 2025-12-15 | **Rev: José Tejada G.** |
| KiCad E.D.A. 8.0.9 | | Id: 8/11 |

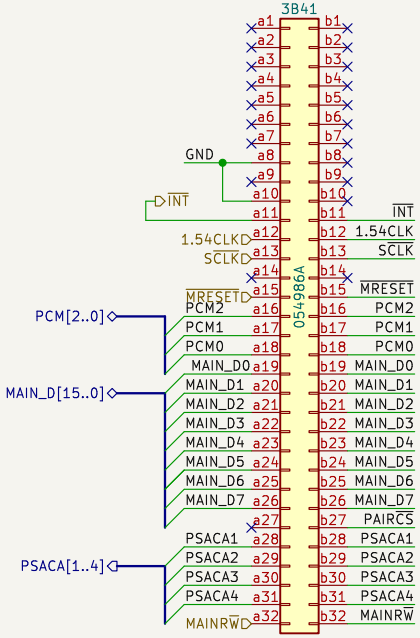


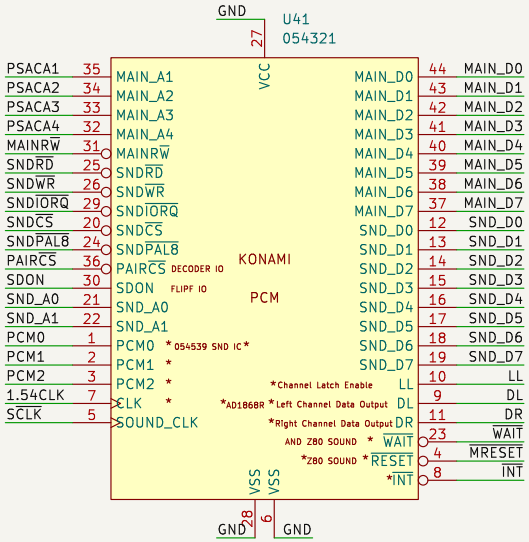


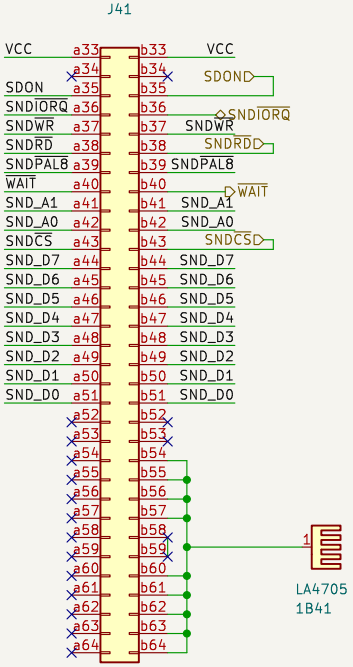


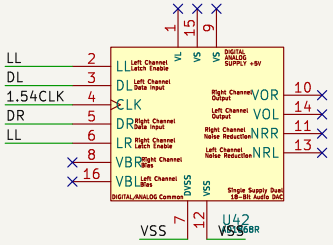


JOTEGO
www.patreon.com/jotego
**JOTEGO**

Sheet: /sound/054986A/
File: 054986A.kicad_sch

**Title: Premier Soccer**

| Size: A4 | Date: 2025-12-15 | Rev: |
|---|---|---|
| KiCad E.D.A. 8.0.9 | | Id: 9/11 |

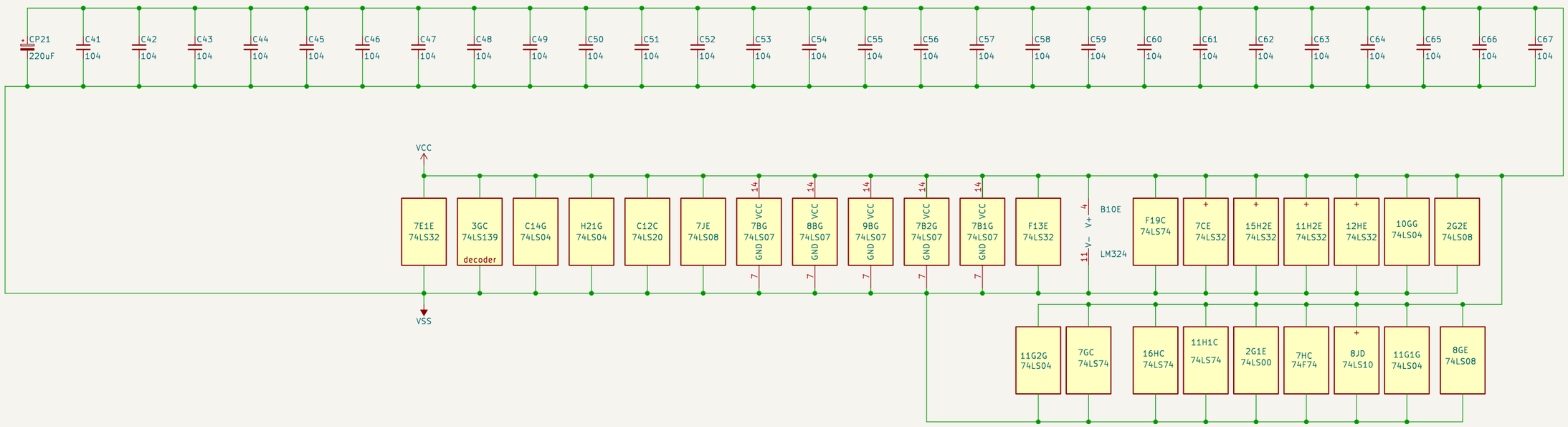


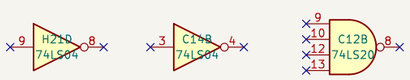


JOTEGO
www.patreon.com/jotego
**JOTEGO**

Sheet: /capacitors/
File: capacitors.kicad_sch

***Title: Premier Soccer***

| | | |
|---|---|---|
| Size: A3 | Date: 2025-12-15 | **Rev: José Tejada G.** |
| KiCad E.D.A. 8.0.9 | | Id: 10/11 |

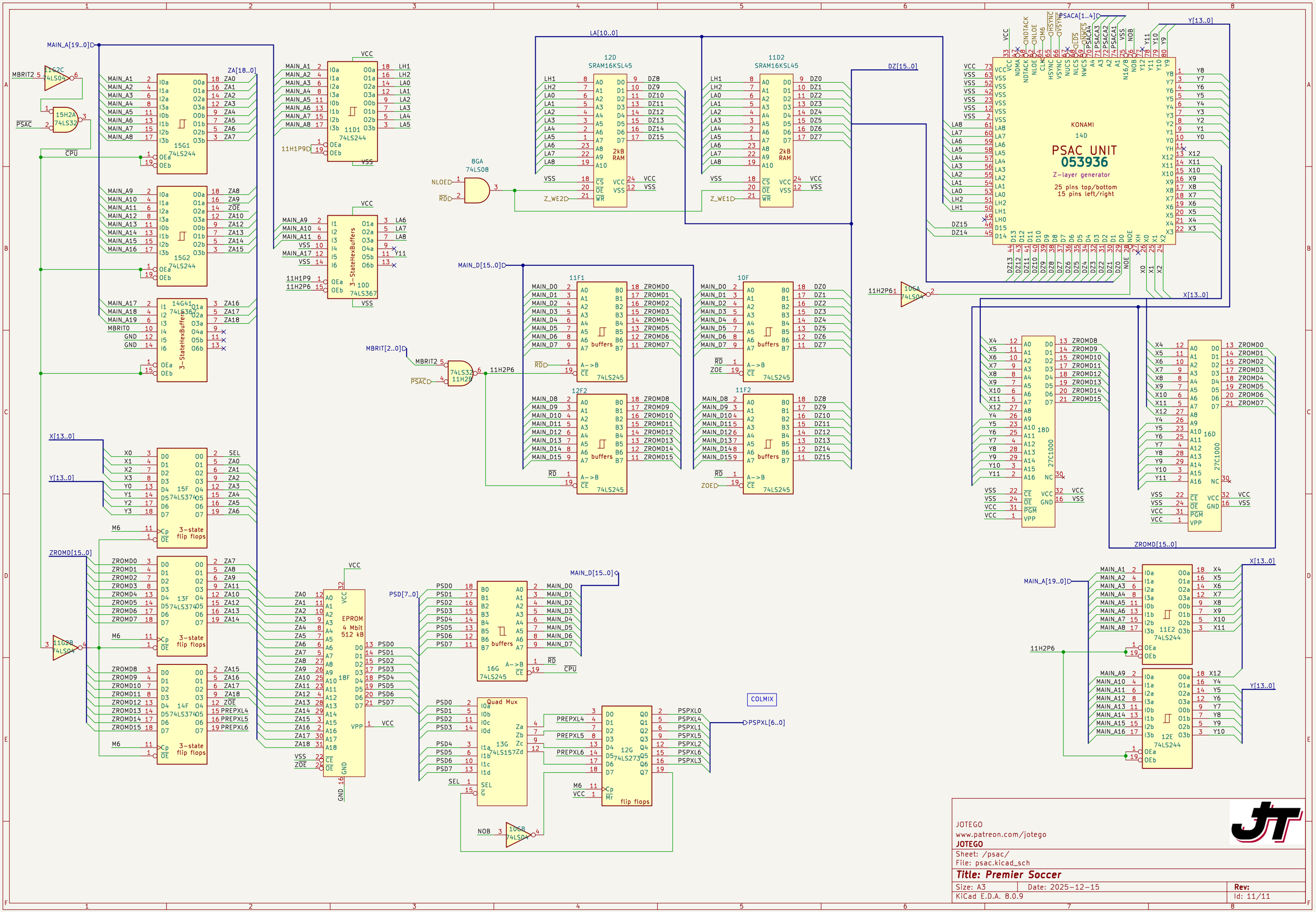
KONAMI
14D
PSAC UNIT
053936
Z-layer generator
25 pins top/bottom
15 pins left/right
JOTEGO
www.patreon.com/jotego
JOTEGO
Sheet: /psac/
File: psac.kicad_sch
Title: Premier Soccer
Size: A3
Date: 2025-12-15
Rev:
KiCad E.D.A. 8.0.9
Id: 11/11