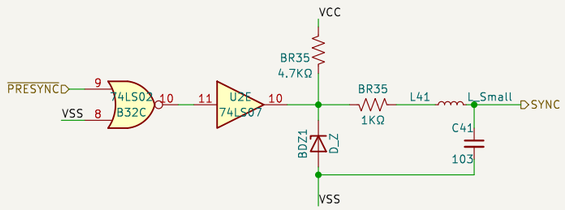

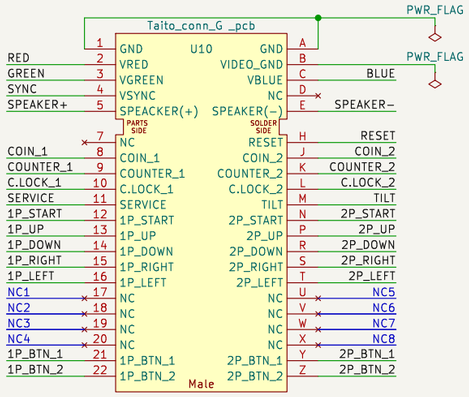

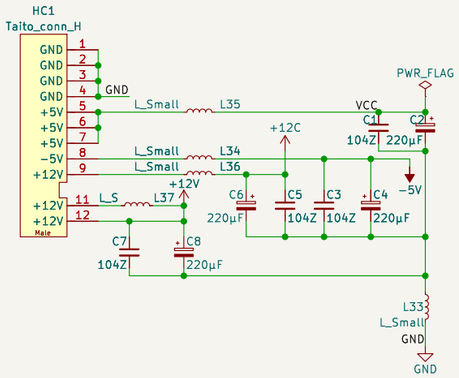

Cabinet

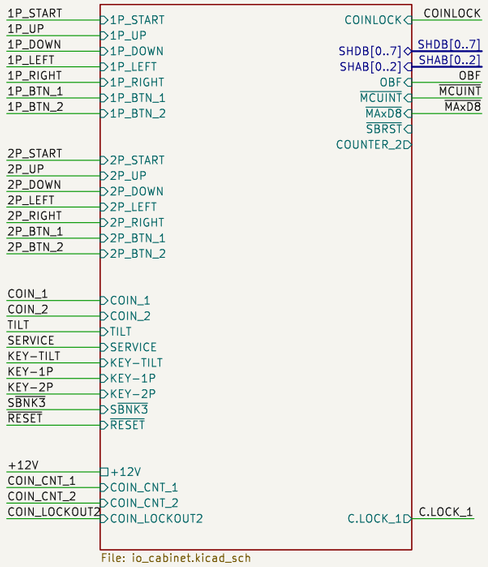

File: io_cabinet.kicad_sch

Sound

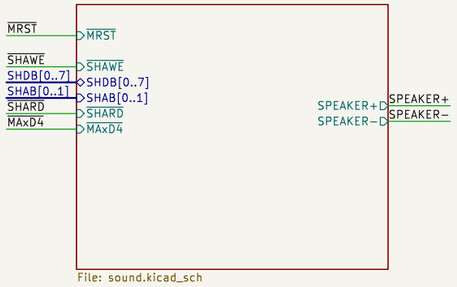

File: sound.kicad_sch

Video

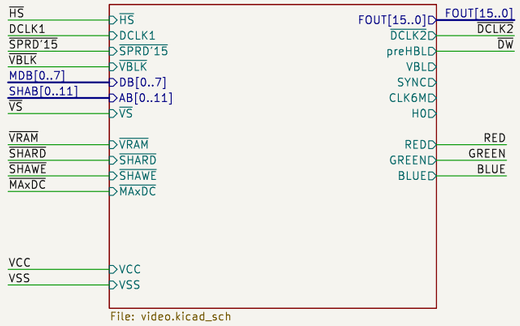

File: video.kicad_sch

Main

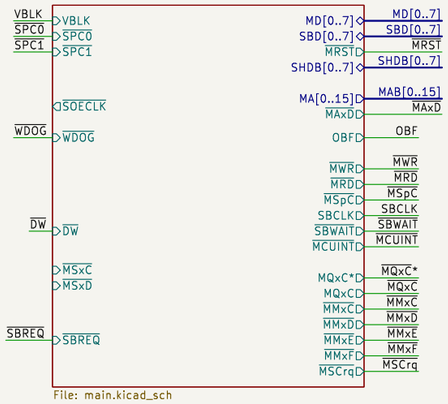

File: main.kicad_sch

Shared

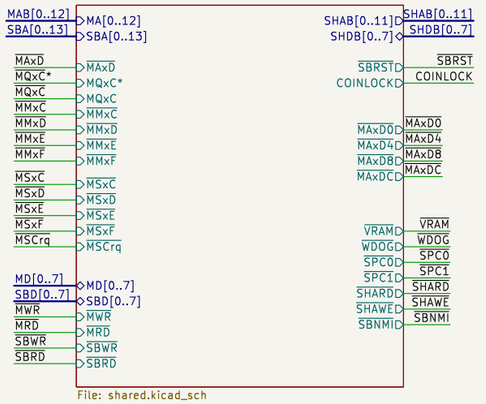

File: shared.kicad_sch

Sub

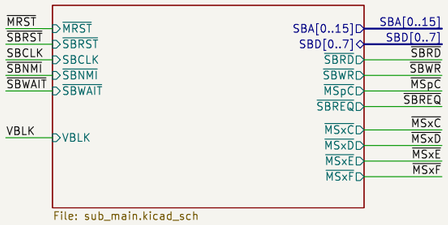

File: sub_main.kicad_sch

capacitors_lu

File: capacitors_lu.kicad_sch

José Tejada
www.patreon.com/jotego
JOTEGO

Sheet: /
File: fairyland.kicad_sch

Title: The Fairyland Story

Size: A3	Date: 2024-11-16	Rev:
KiCad E.D.A. 8.0.9		Id: 1/20

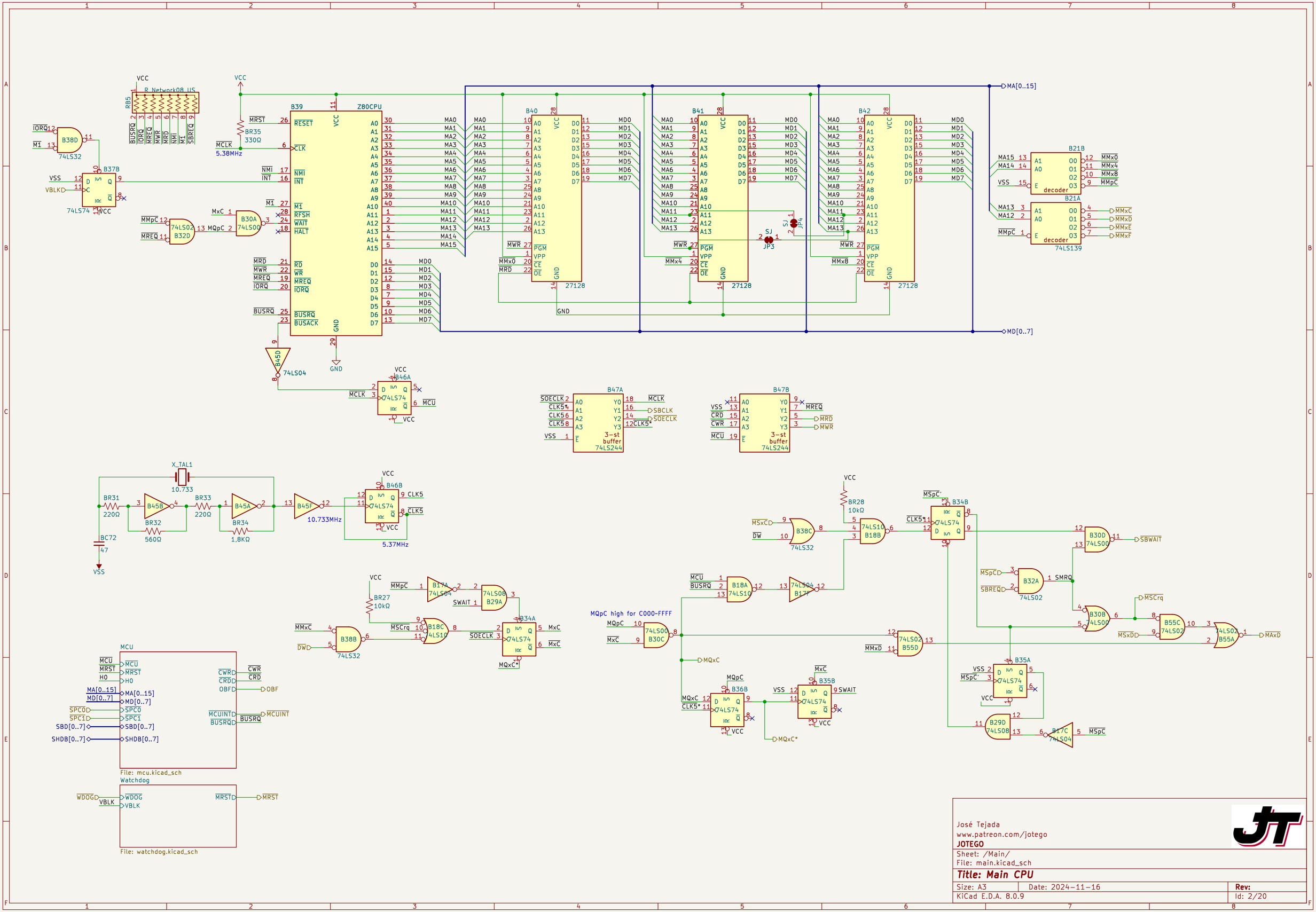

José Tejada
www.patreon.com/jotego
JOTEGO

Sheet: /Main/
File: main.kicad_sch

Title: Main CPU

Size: A3	Date: 2024-11-16	Rev:
KiCad E.D.A. 8.0.9		Id: 2/20

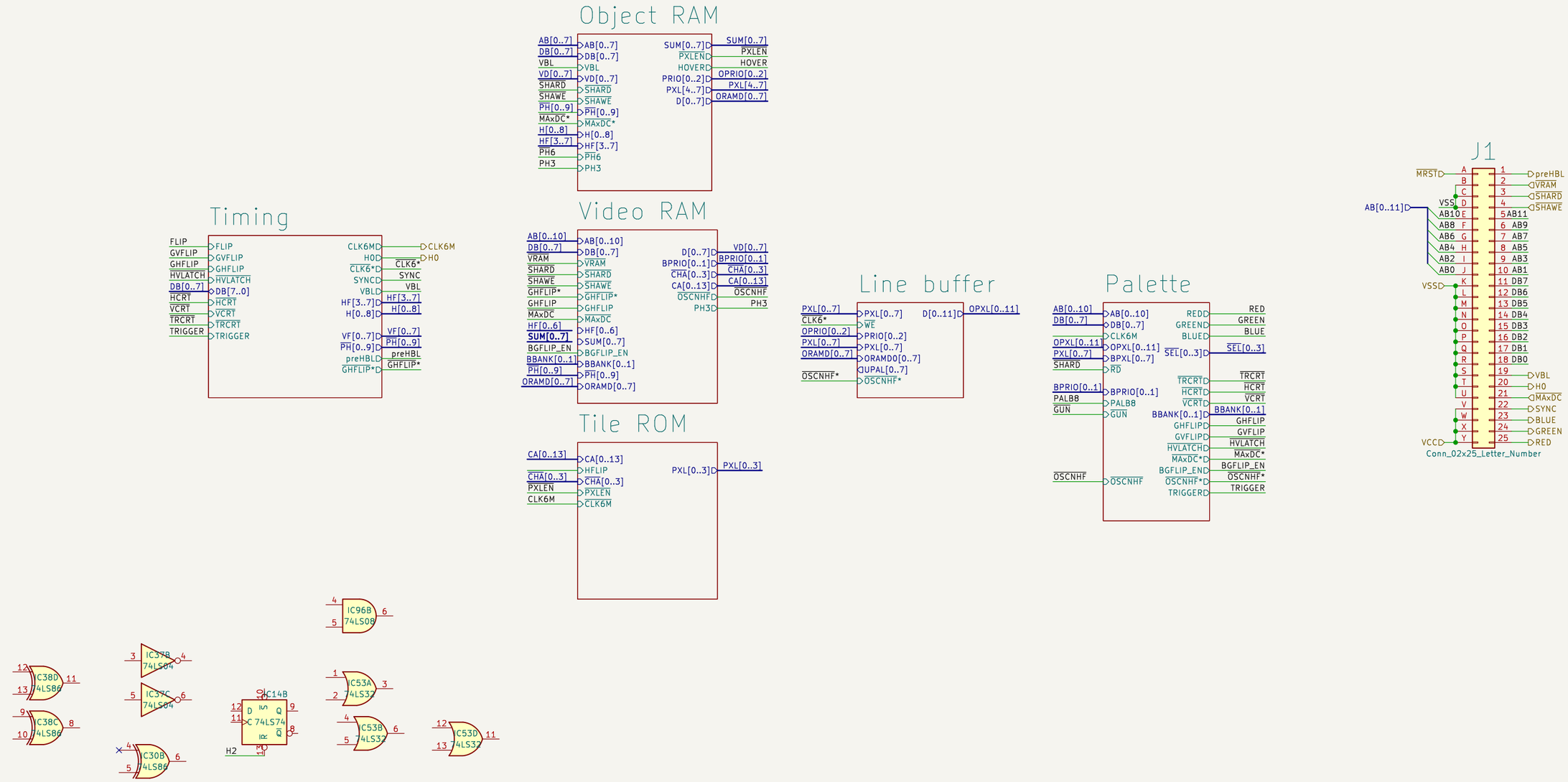

José Tejada
www.patreon.com/jotego
JOTEGO

Sheet: /Video/
File: video.kicad_sch

Title: The Fairyland Story

Size: A3	Date: 2024-11-16	**Rev:**
KiCad E.D.A. 8.0.9		Id: 3/20

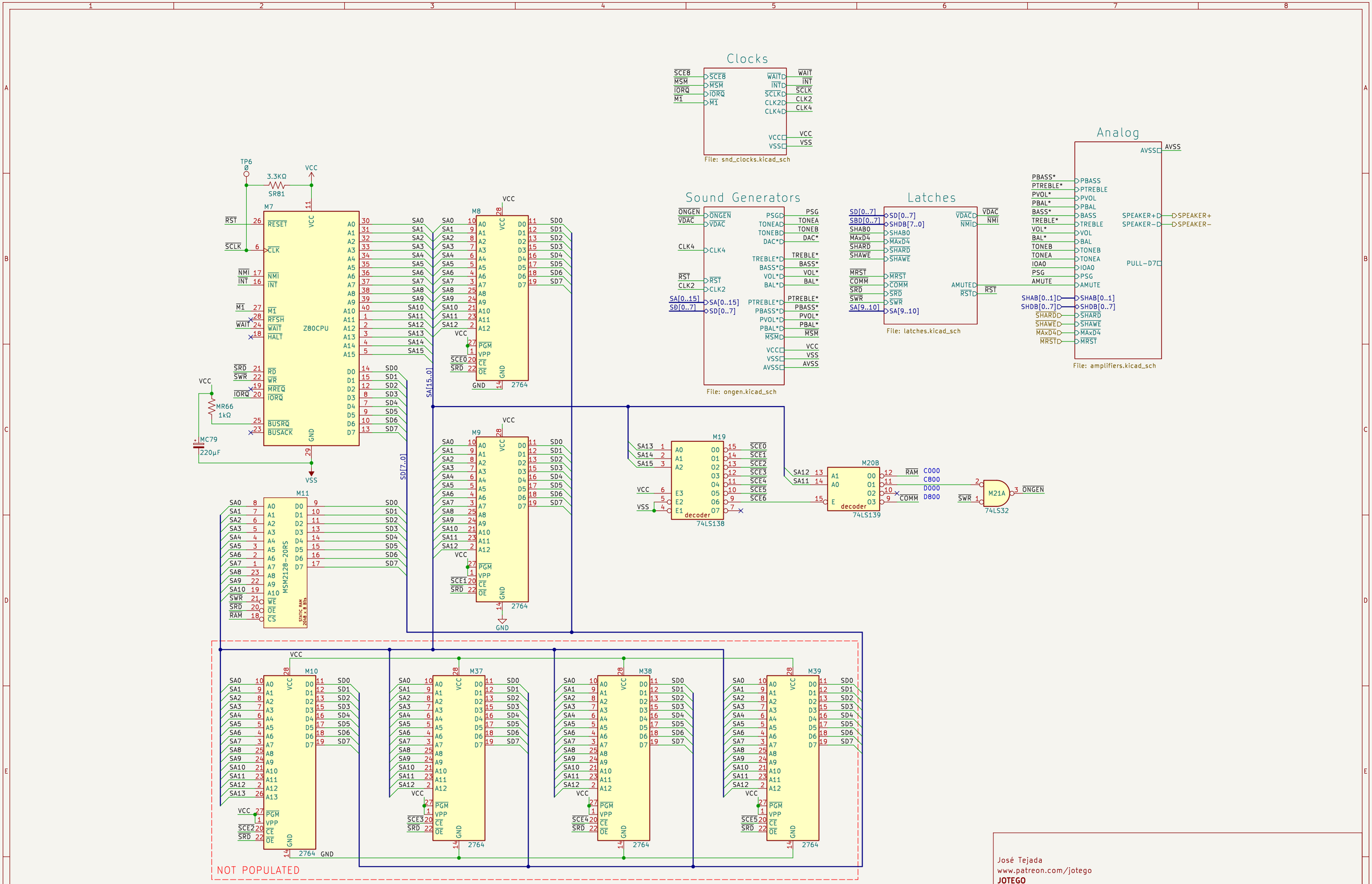

José Tejada
www.patreon.com/jotego
JOTEGO

Sheet: /Sound/
File: sound.kicad_sch

Title: Sound Board

Size: A3	Date: 2024-11-16	Rev:
KiCad E.D.A. 8.0.9		Id: 4/20

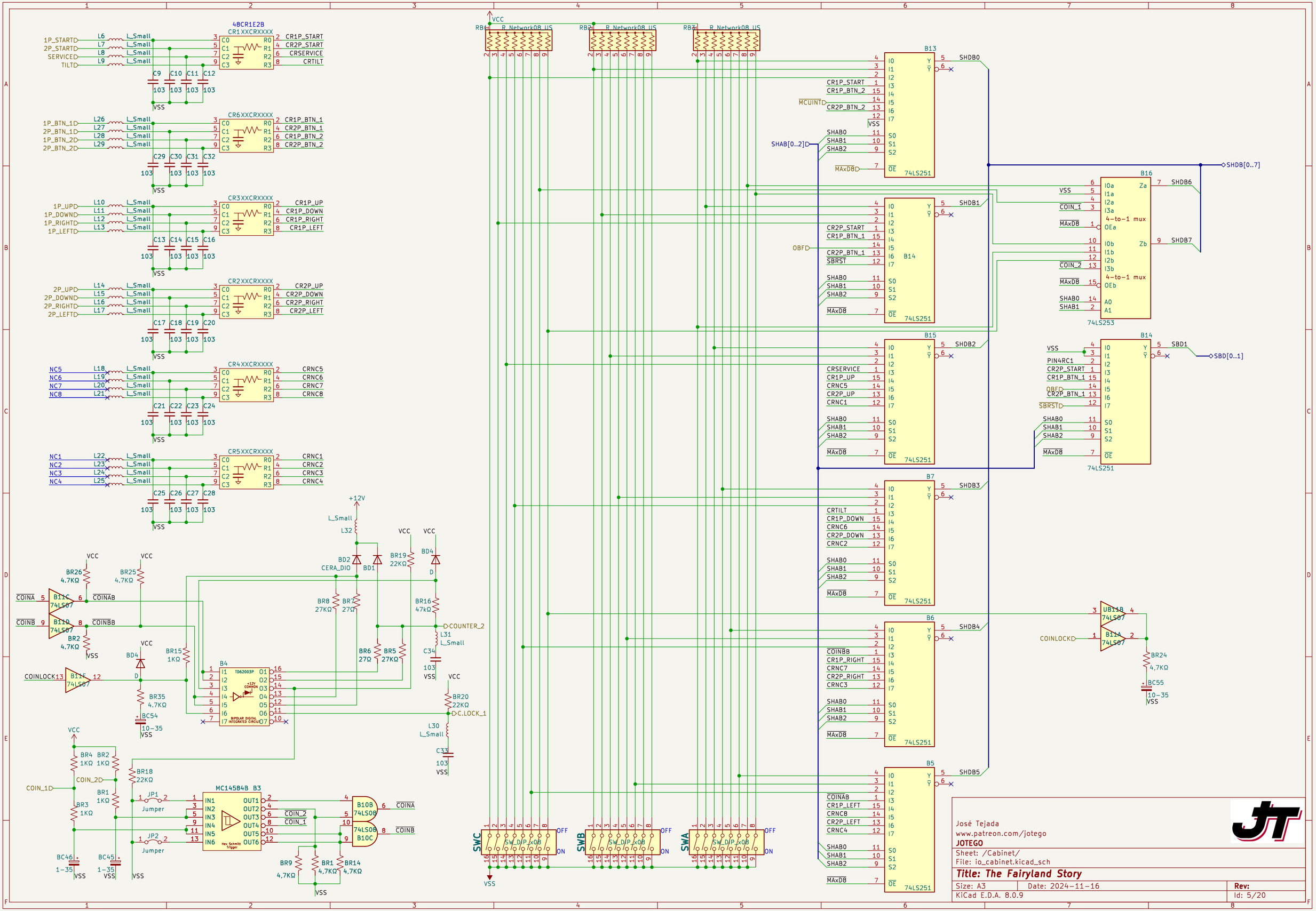
48CR1E2B
CR1XXCRXXXX
CR6XXCRXXXX
CR3XXCRXXXX
CR2XXCRXXXX
CR4XXCRXXXX
CR5XXCRXXXX
1P_START
2P_START
SERVICE
TILT
1P_BTN_1
2P_BTN_1
1P_BTN_2
2P_BTN_2
1P_UP
1P_DOWN
1P_RIGHT
1P_LEFT
2P_UP
2P_DOWN
2P_RIGHT
2P_LEFT
NC5
NC6
NC7
NC8
NC1
NC2
NC3
NC4
CR1P_START
CR2P_START
CRSERVICE
CRTILT
CR1P_BTN_1
CR2P_BTN_1
CR1P_BTN_2
CR2P_BTN_2
CR1P_UP
CR1P_DOWN
CR1P_RIGHT
CR1P_LEFT
CR2P_UP
CR2P_DOWN
CR2P_RIGHT
CR2P_LEFT
CRNC5
CRNC6
CRNC7
CRNC8
CRNC1
CRNC2
CRNC3
CRNC4
VCC
VSS
R_Network08_US
B13
B14
B15
B7
B6
B5
B16
74LS251
74LS253
SHDB0
SHDB1
SHDB2
SHDB3
SHDB4
SHDB5
SHDB6
SHDB7
SHDB[0..7]
SBD1
SBD[0..1]
SHAB[0..2]
MCUINT
OBF
SBRST
MAxDB
COIN_1
COIN_2
PIN4RC1
4-to-1 mux
+12V
CERA_DIO
COUNTER_2
C.LOCK_1
COINA
COINB
COINAB
COINBB
COINLOCKD
B11C
B11D
B11E
B11A
B11B
74LS07
TD62003P
BIPOLAR DIGITAL INTEGRATED CIRCUIT
MC14584B B3
Hex Schmitt Trigger
Jumper
JP1
JP2
B10B
B10C
74LS08
SW_DIP_x08
SWC
SWB
SWA
OFF
ON
José Tejada
www.patreon.com/jotego
JOTEGO
Sheet: /Cabinet/
File: io_cabinet.kicad_sch
Title: The Fairyland Story
Size: A3
Date: 2024-11-16
Rev:
KiCad E.D.A. 8.0.9
Id: 5/20

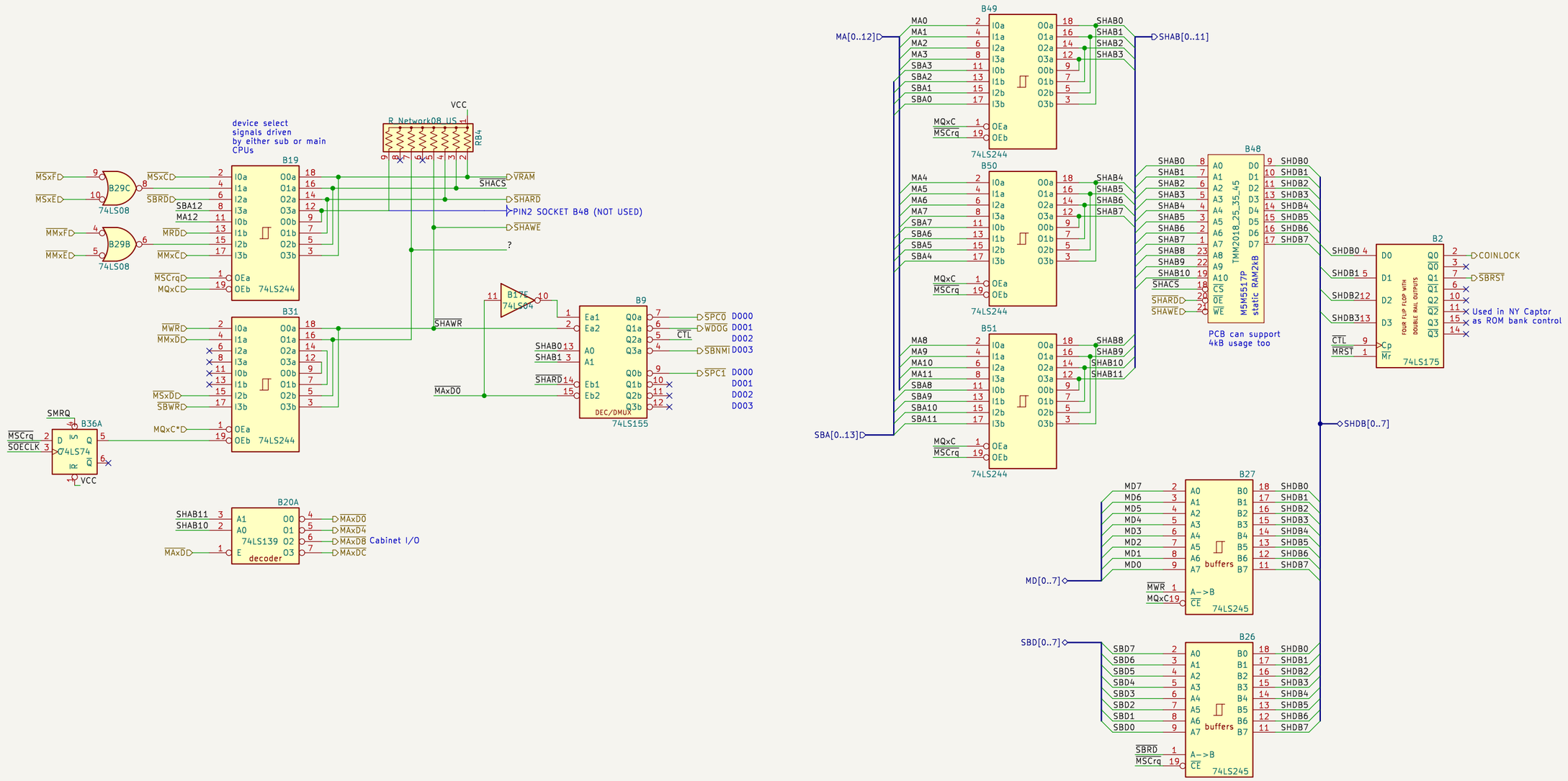

José Tejada
www.patreon.com/jotego
JOTEGO

Sheet: /Shared/
File: shared.kicad_sch

Title: Shared bus and RAM

Size: A3	Date: 2024-11-16	**Rev:**
KiCad E.D.A. 8.0.9		Id: 6/20

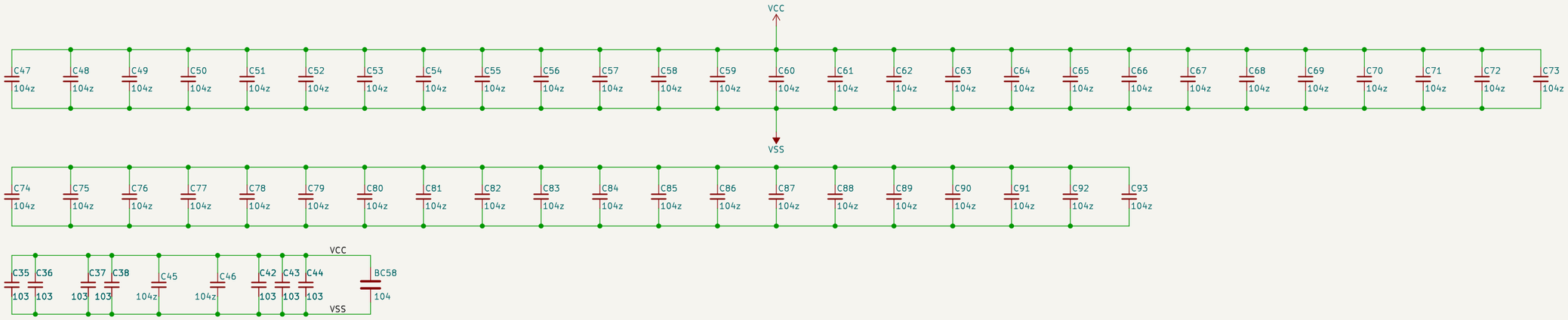

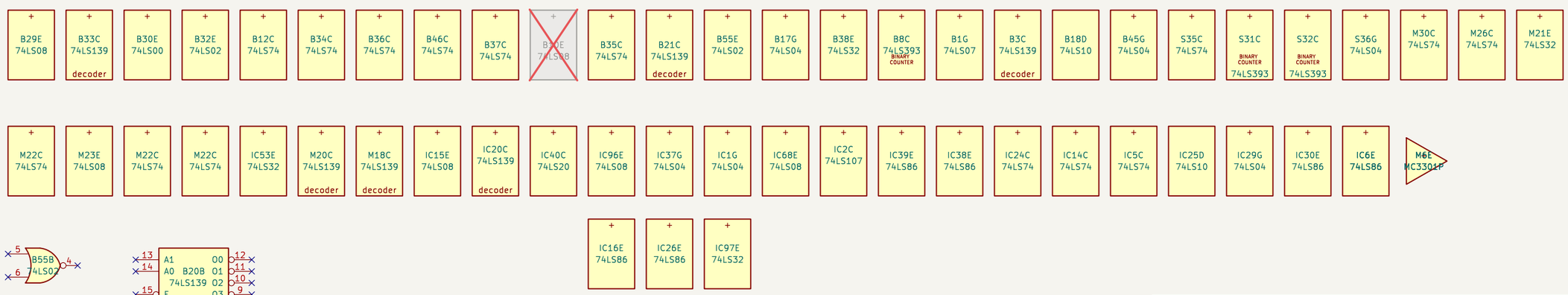

José Tejada
www.patreon.com/jotego
JOTEGO

Sheet: /capacitors_lu/
File: capacitors_lu.kicad_sch

Title: The Fairyland Story

Size: A3	Date: 2024-11-16	**Rev:**
KiCad E.D.A. 8.0.9		Id: 7/20

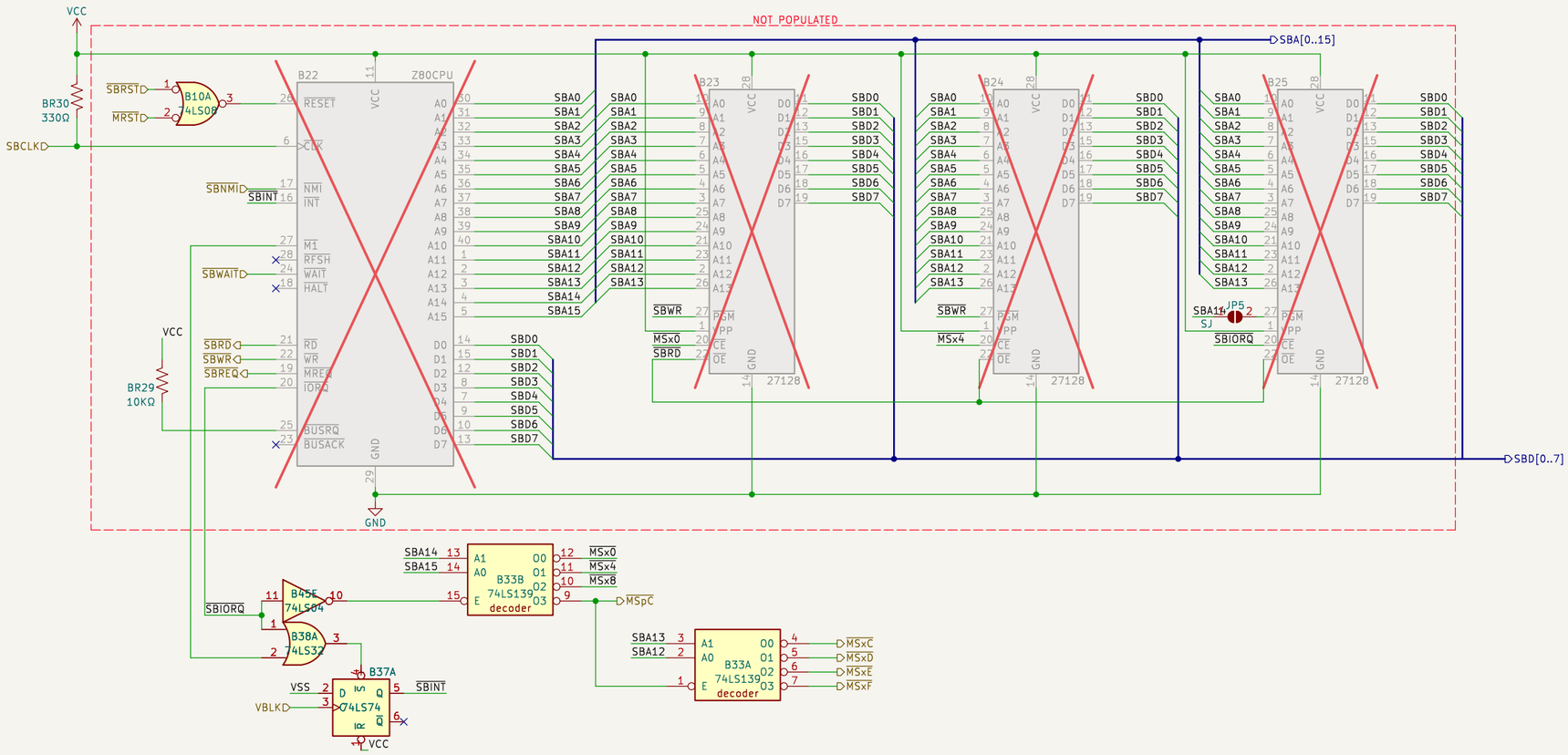

José Tejada
www.patreon.com/jotego
JOTEGO

Sheet: /Sub/
File: sub_main.kicad_sch

Title: Subsidiary CPU

Size: A3	Date: 2024-11-16	Rev:
KiCad E.D.A. 8.0.9		Id: 8/20

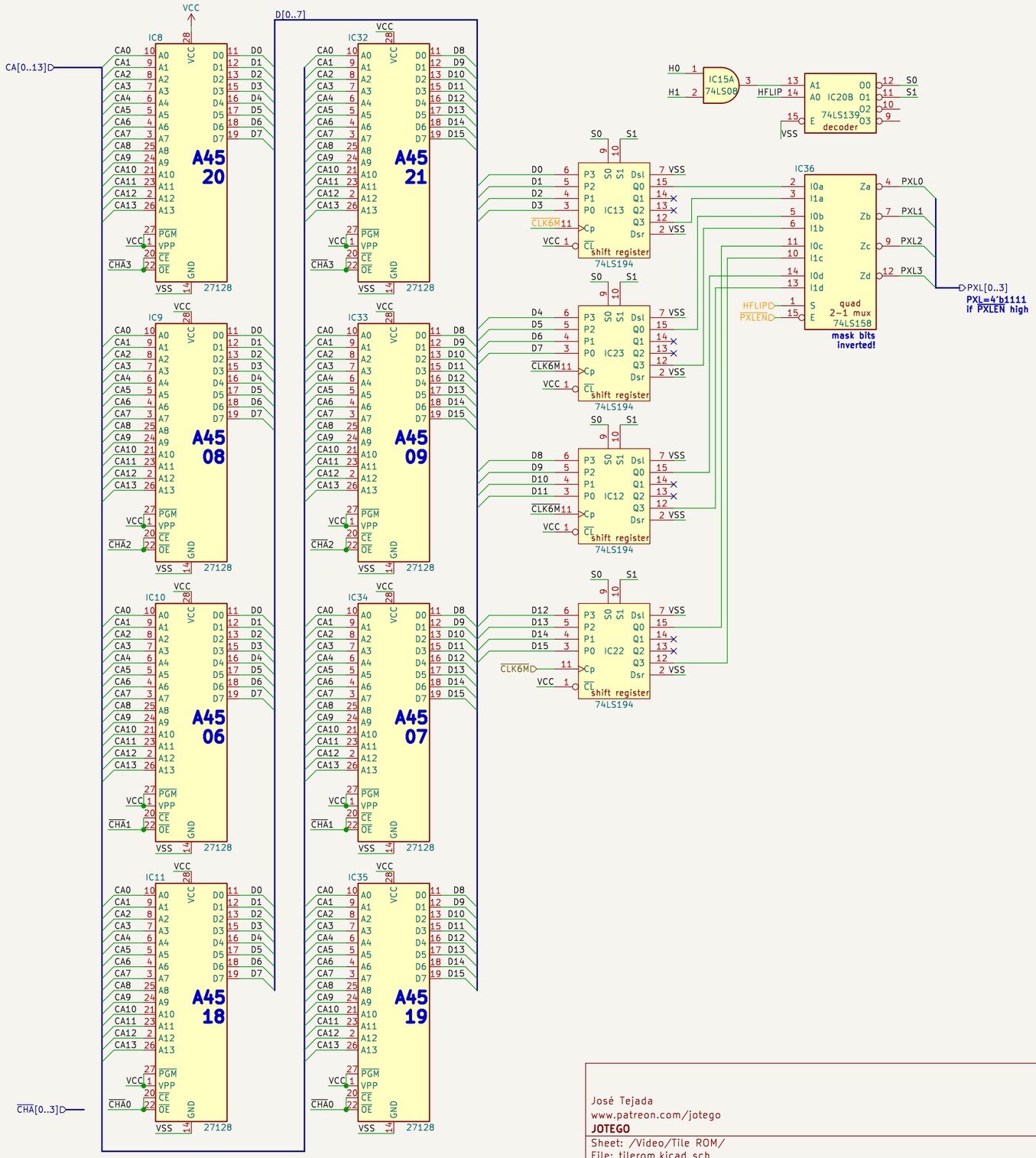

José Tejada
www.patreon.com/jotego
JOTEGO

Sheet: /Video/Tile ROM/
File: tilerom.kicad_sch

Title: Tile ROMs

Size: A3	Date: 2024-11-16	Rev:
KiCad E.D.A. 8.0.9		Id: 9/20

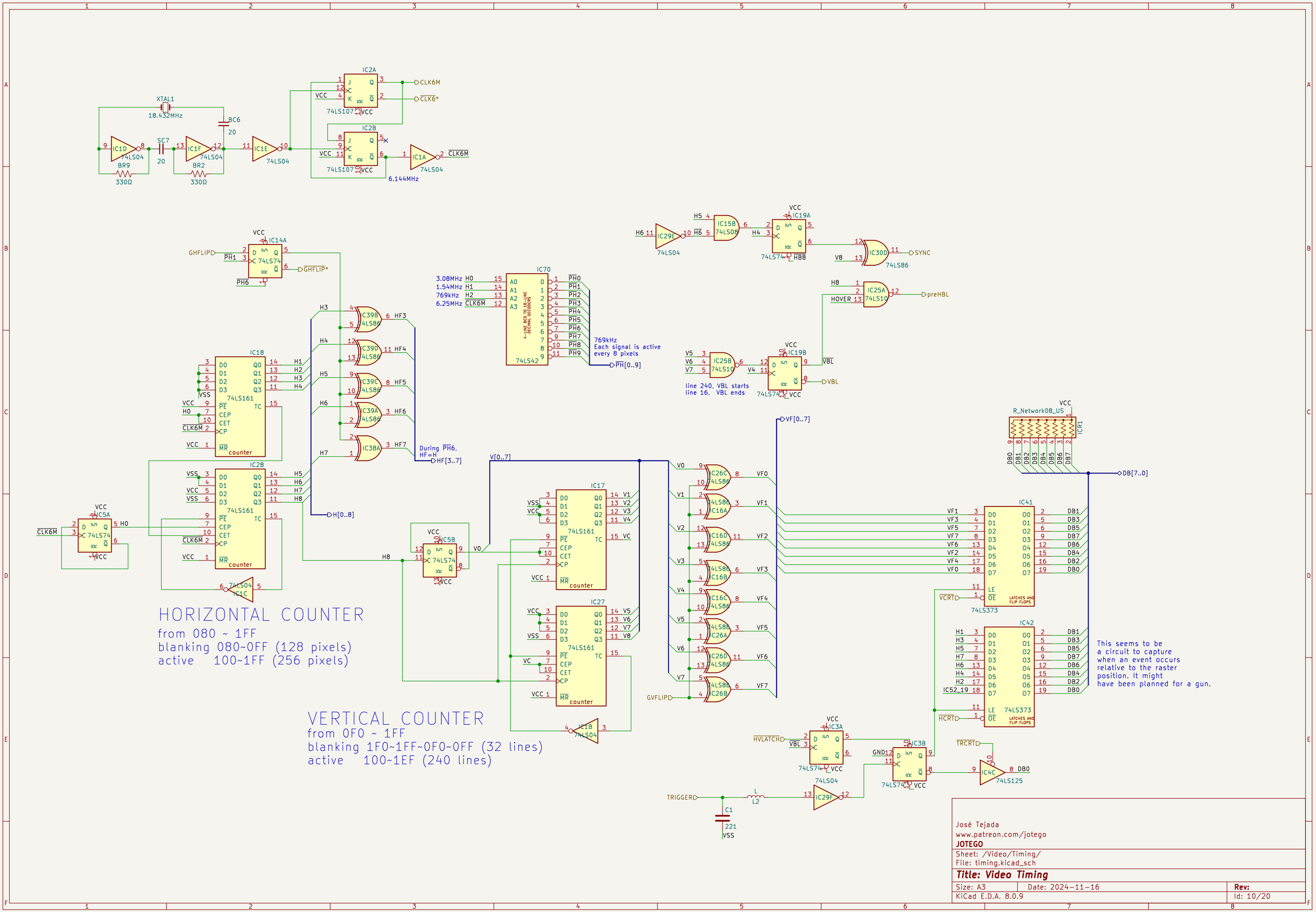

José Tejada
www.patreon.com/jotego
JOTEGO

Sheet: /Video/Timing/
File: timing.kicad_sch

Title: Video Timing

Size: A3	Date: 2024-11-16	Rev:
KiCad E.D.A. 8.0.9		Id: 10/20

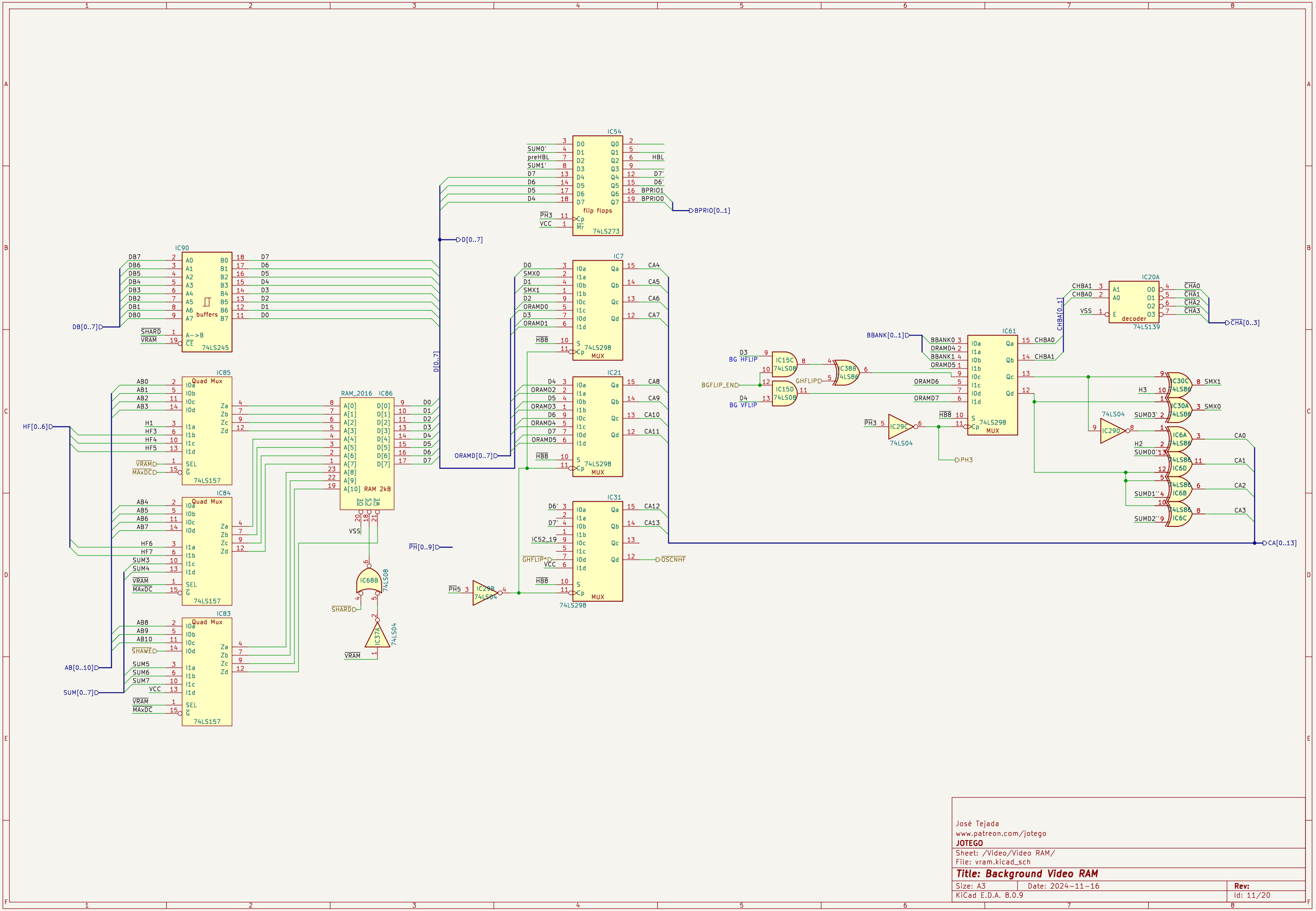

José Tejada
www.patreon.com/jotego
JOTEGO

Sheet: /Video/Video RAM/
File: vram.kicad_sch

Title: Background Video RAM

Size: A3	Date: 2024-11-16	**Rev:**
KiCad E.D.A. 8.0.9		Id: 11/20

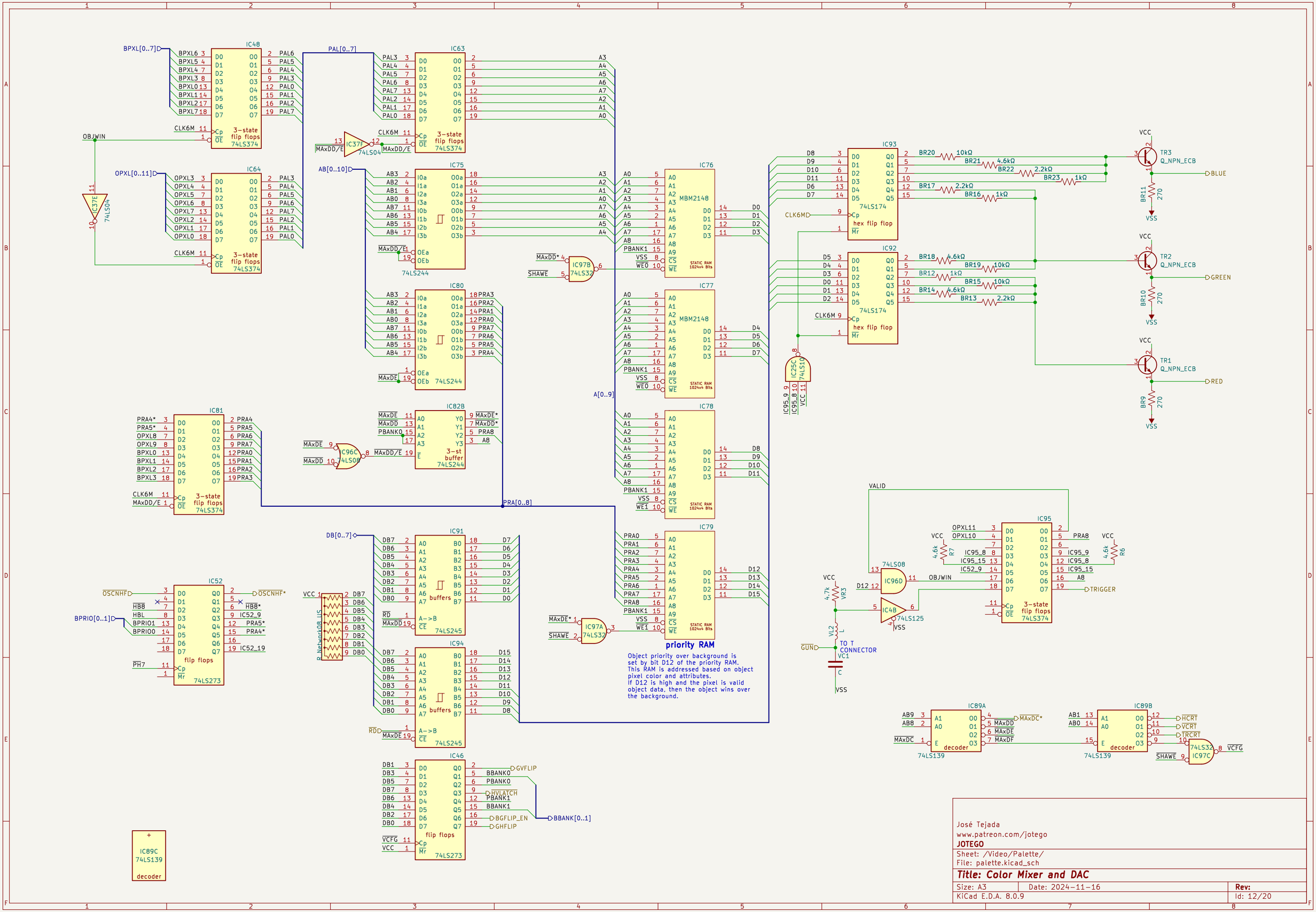
IC48
IC63
IC64
IC75
IC80
IC81
IC52
IC91
IC94
IC46
IC76
IC77
IC78
IC79
IC93
IC92
IC95
IC89A
IC89B
IC89C
priority RAM
Object priority over background is set by bit D12 of the priority RAM.
This RAM is addressed based on object pixel color and attributes.
If D12 is high and the pixel is valid object data, then the object wins over the background.
TO T CONNECTOR
TRIGGER
BLUE
GREEN
RED
VALID
BBANK[0..1]
GVFLIP
GHFLIP
BGFLIP_EN
HVLATCH
VCFG
HCRT
VCRT
TRCRT
MAxDC*
MAxDD
MAxDE
MAxDF
josé Tejada
www.patreon.com/jotego
JOTEGO
Sheet: /Video/Palette/
File: palette.kicad_sch
Title: Color Mixer and DAC
Size: A3
Date: 2024-11-16
Rev:
KiCad E.D.A. 8.0.9
Id: 12/20

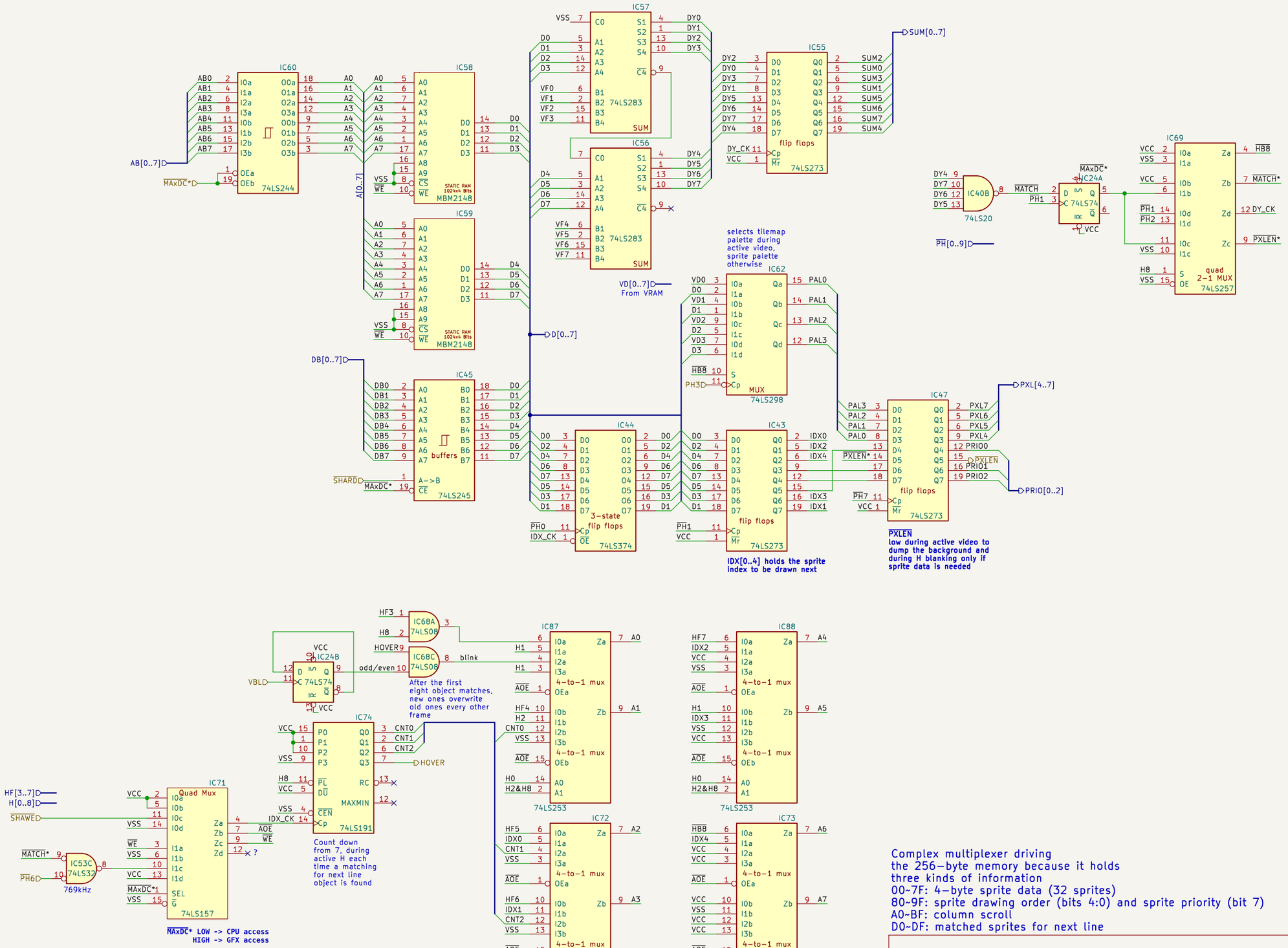

Complex multiplexer driving
the 256-byte memory because it holds
three kinds of information
00~7F: 4-byte sprite data (32 sprites)
80~9F: sprite drawing order (bits 4:0) and sprite priority (bit 7)
A0~BF: column scroll
D0~DF: matched sprites for next line

José Tejada
www.patreon.com/jotego
JOTEGO

Sheet: /Video/Object RAM/
File: obj_ram.kicad_sch

Title: Object Information

Size: A3	Date: 2024-11-16	Rev:
KiCad E.D.A. 8.0.9		Id: 13/20

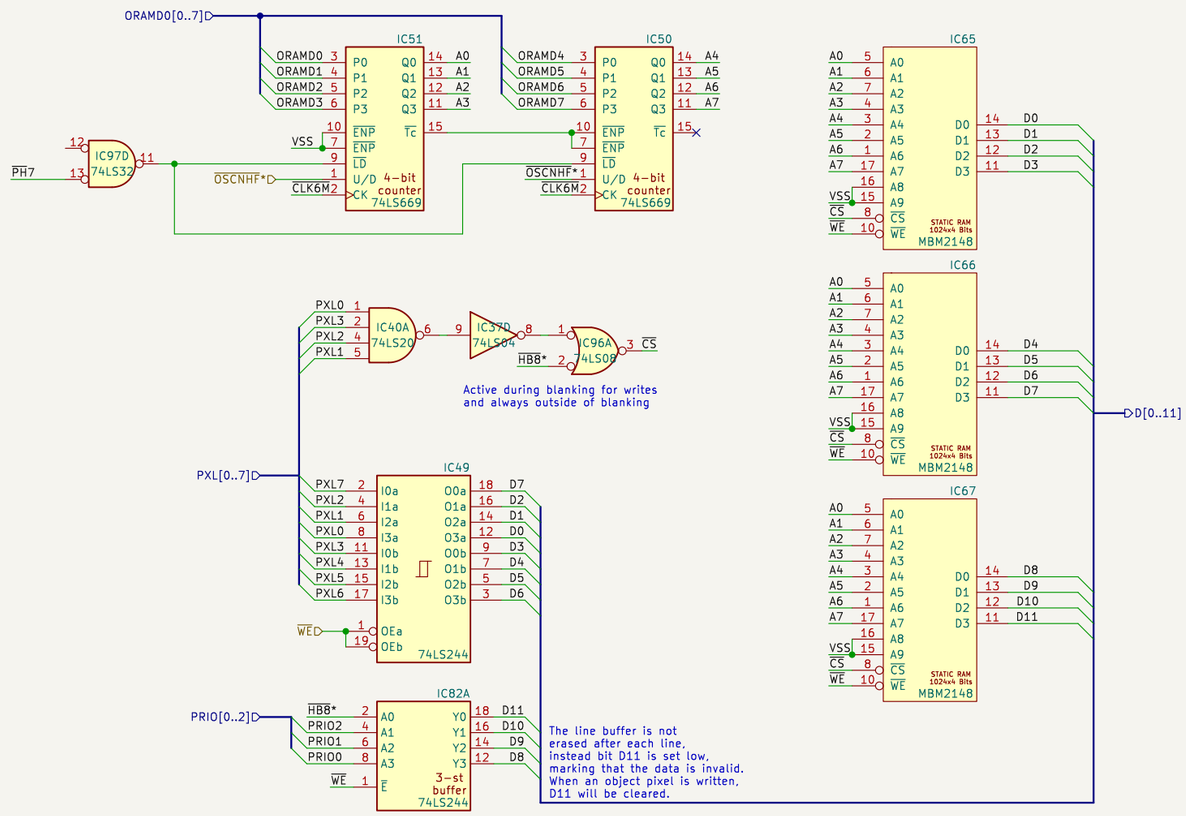

José Tejada
www.patreon.com/jotego
JOTEGO

Sheet: /Video/Line buffer/
File: linebuf.kicad_sch

Title: Single Line Video Buffer

Size: A3	Date: 2024-11-16	**Rev:**
KiCad E.D.A. 8.0.9		Id: 14/20

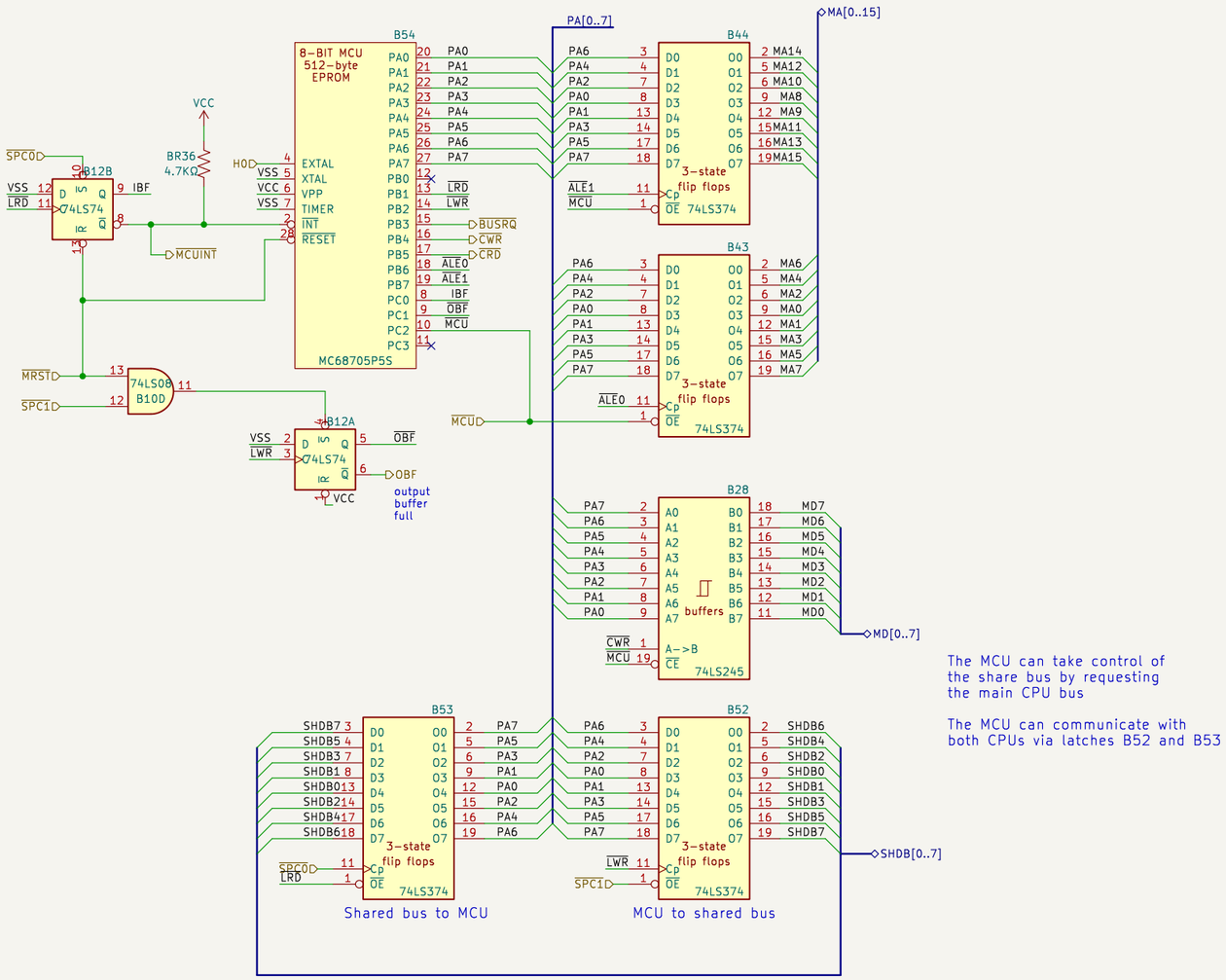

The MCU can take control of
the share bus by requesting
the main CPU bus

The MCU can communicate with
both CPUs via latches B52 and B53

José Tejada
www.patreon.com/jotego
JOTEGO

Sheet: /Main/MCU/
File: mcu.kicad_sch

Title: MCU

Size: A3	Date: 2024-11-16	Rev:
KiCad E.D.A. 8.0.9		Id: 15/20

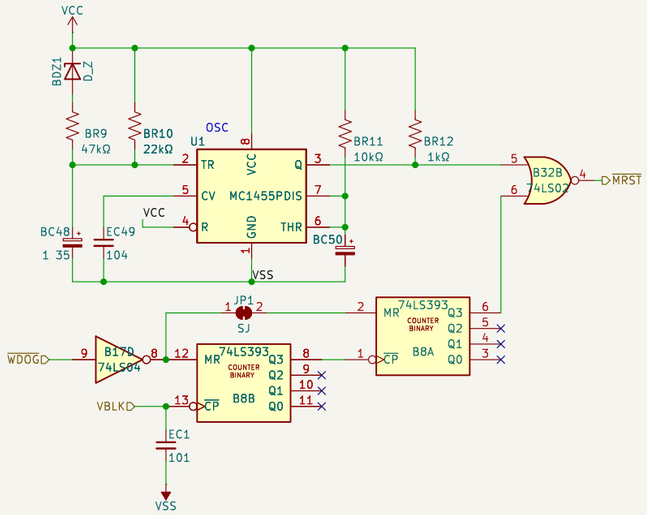

José Tejada
www.patreon.com/jotego
JOTEGO

Sheet: /Main/Watchdog/
File: watchdog.kicad_sch

Title:

Size: A3	Date: 2024-11-16	**Rev:**
KiCad E.D.A. 8.0.9		Id: 16/20

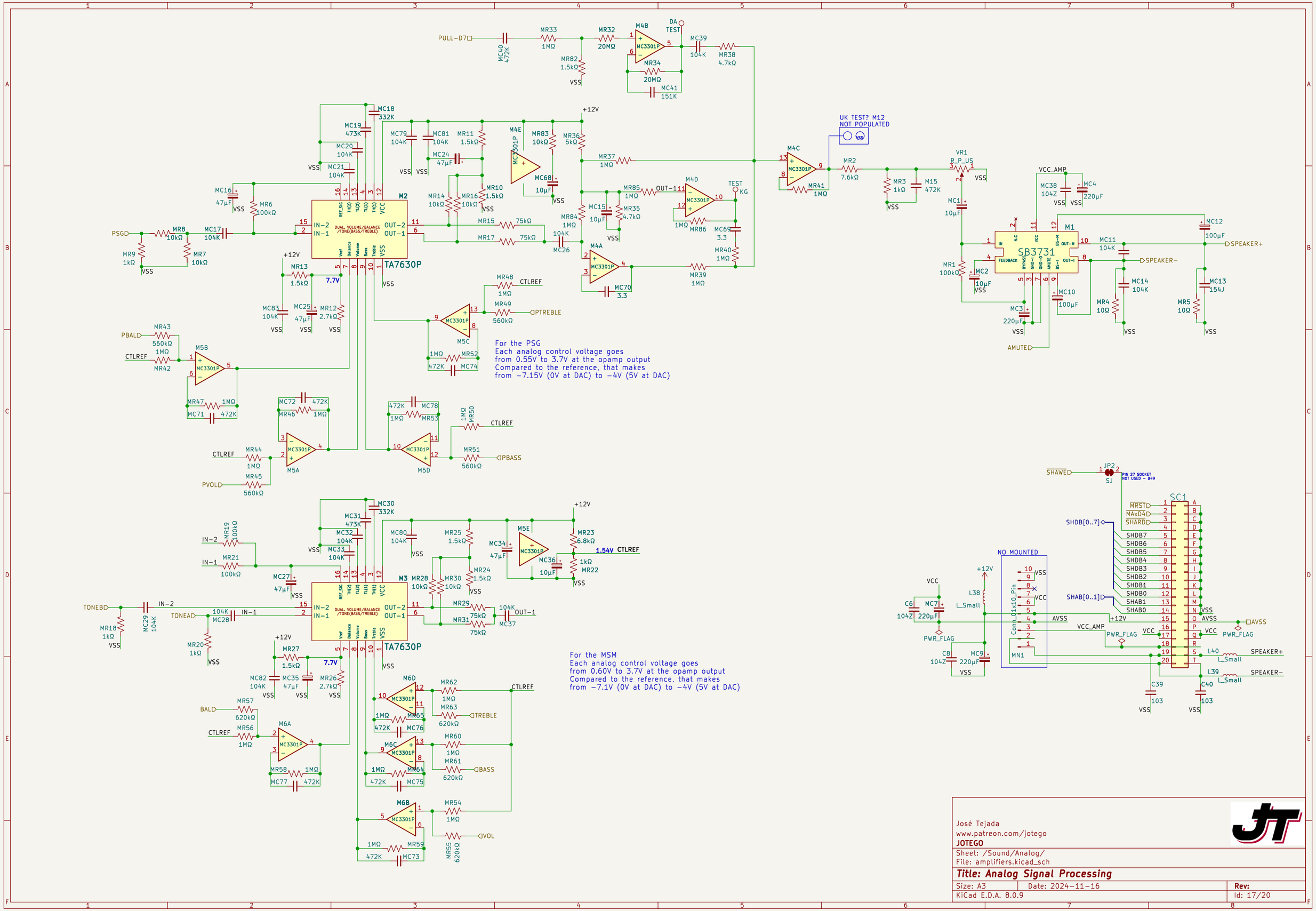

José Tejada
www.patreon.com/jotego
JOTEGO

Sheet: /Sound/Analog/
File: amplifiers.kicad_sch

Title: Analog Signal Processing

Size: A3	Date: 2024-11-16	Rev:
KiCad E.D.A. 8.0.9		Id: 17/20

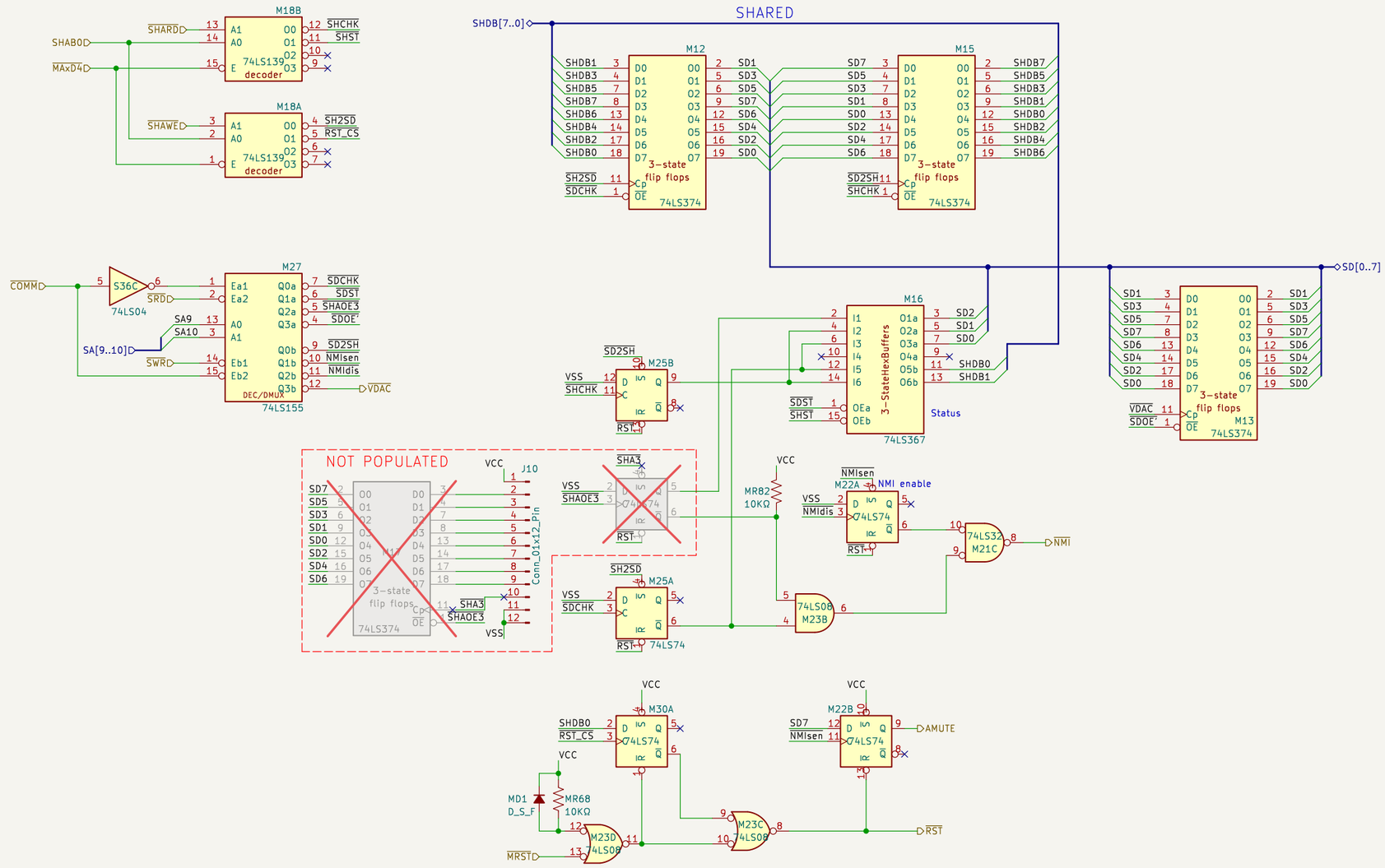

José Tejada
www.patreon.com/jotego
JOTEGO

Sheet: /Sound/Latches/
File: latches.kicad_sch

Title: Communication Latches

Size: A3	Date: 2024-11-16	**Rev:**
KiCad E.D.A. 8.0.9		Id: 18/20

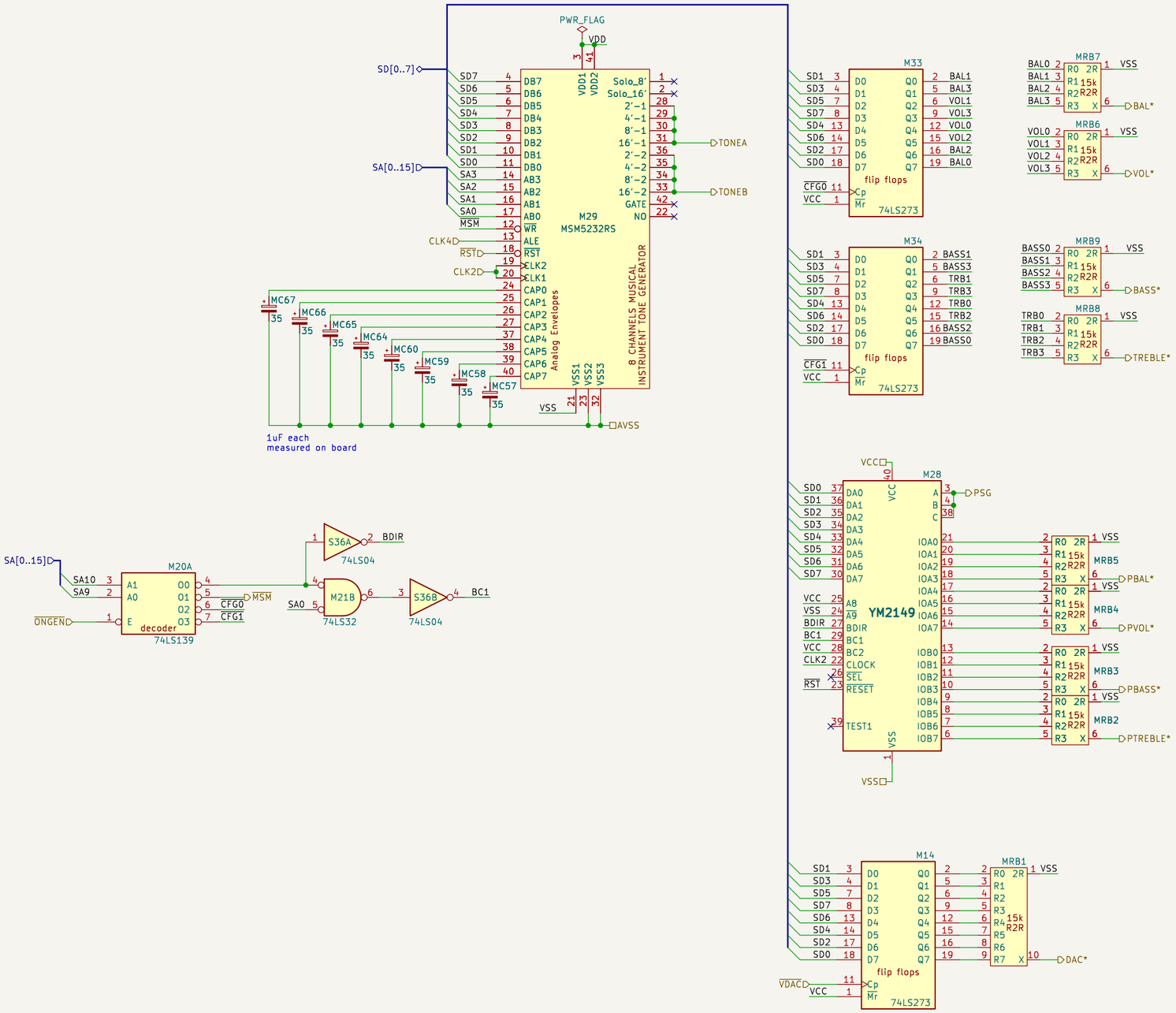

José Tejada
www.patreon.com/jotego
JOTEGO

Sheet: /Sound/Sound Generators/
File: ongen.kicad_sch

Title: Sound Generators

Size: A3	Date: 2024-11-16	Rev:
KiCad E.D.A. 8.0.9		Id: 19/20

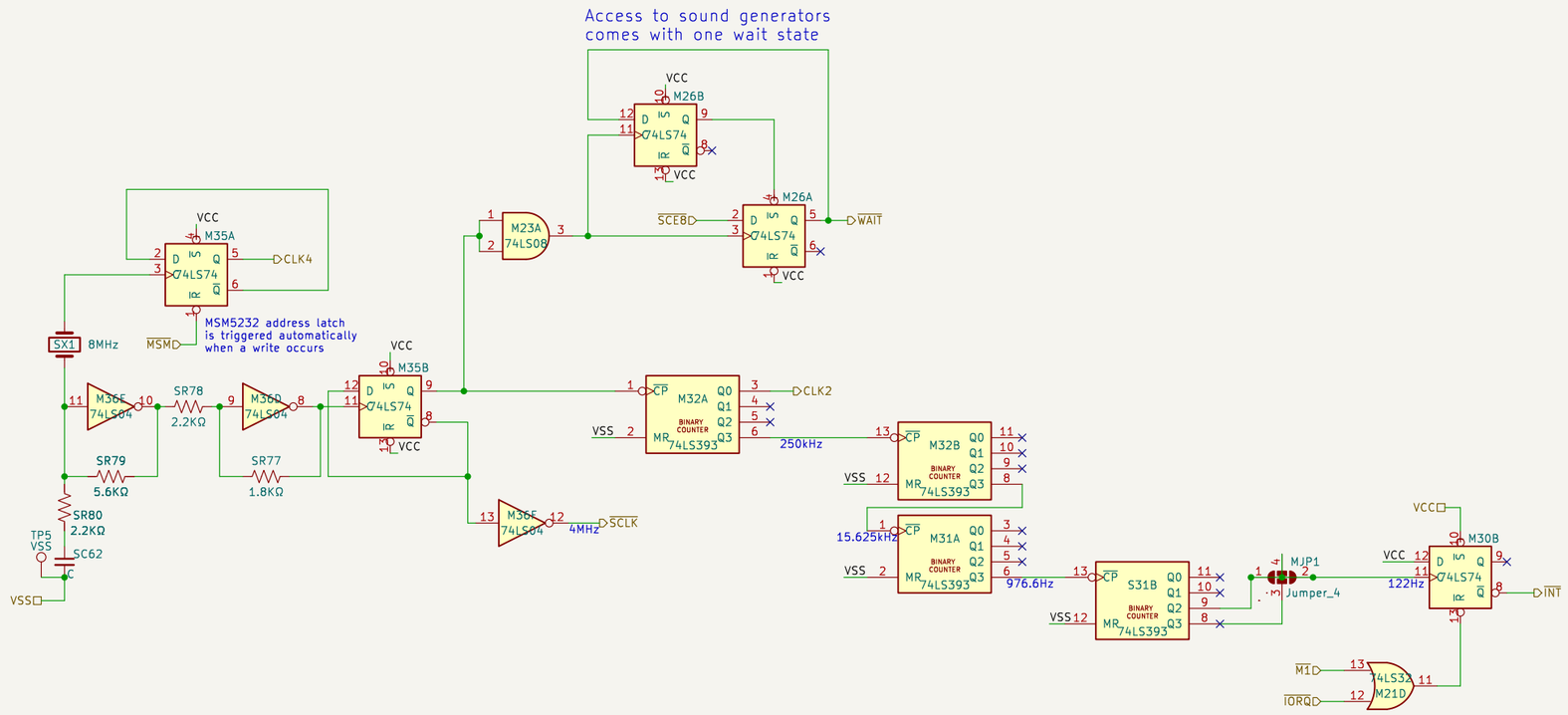

José Tejada
www.patreon.com/jotego
JOTEGO

Sheet: /Sound/Clocks/
File: snd_clocks.kicad_sch

Title: Sound Clock Generation

Size: A3	Date: 2024-11-16	**Rev:**
KiCad E.D.A. 8.0.9		Id: 20/20