CONEXION OF THE BIT 15 IS IN DUBT OF BEING SOMENTHING.
-CHECK MAME REPORT.
-CHECK CABINET PAGE.

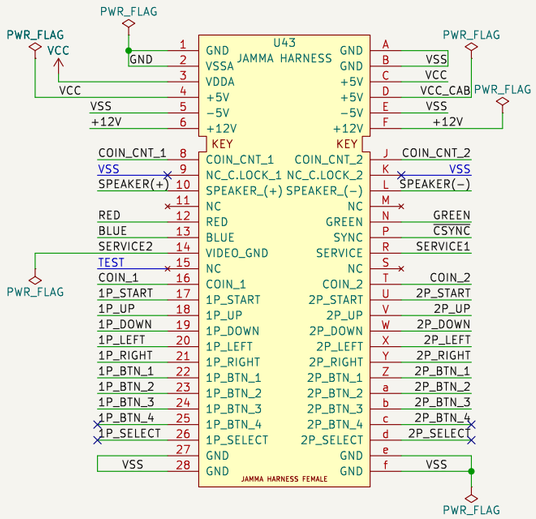

sound

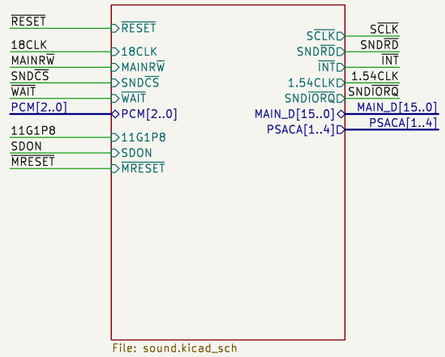

File: sound.kicad_sch

io_cabinet

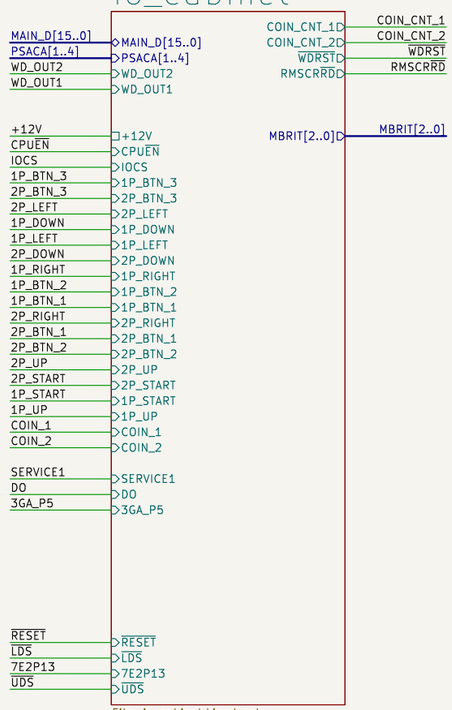

File: io_cabinet.kicad_sch

main

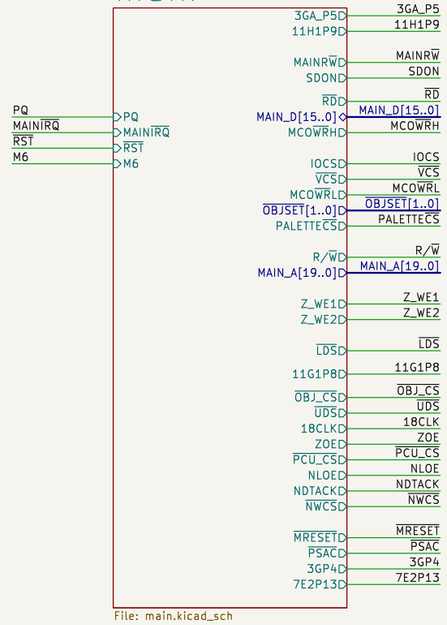

File: main.kicad_sch

capacitors

File: capacitors.kicad_sch

psac

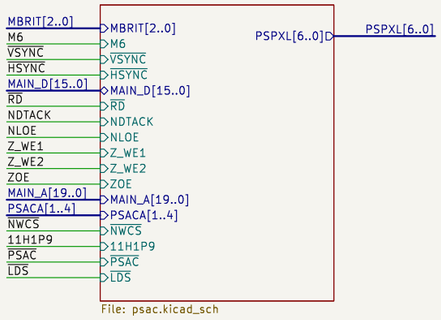

File: psac.kicad_sch

objects

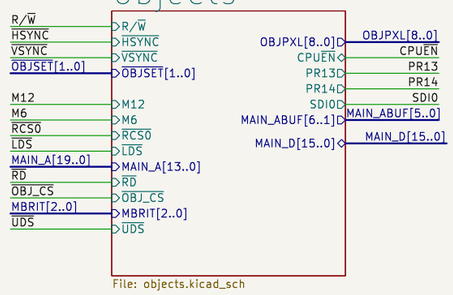

File: objects.kicad_sch

scroll

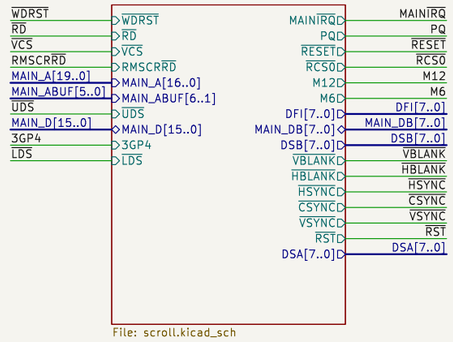

File: scroll.kicad_sch

colmix

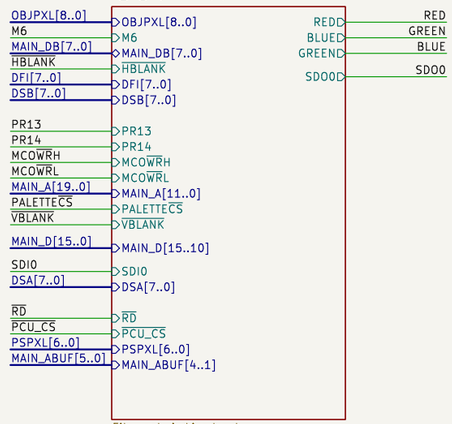

File: colmix.kicad_sch

JOTEGO
www.patreon.com/jotego
JOTEGO

Sheet: /
File: prmrsocr.kicad_sch

Title: Premier Soccer

Size: A3	Date: 2025-12-15	**Rev: José Tejada G.**
KiCad E.D.A. 8.0.9		Id: 1/11

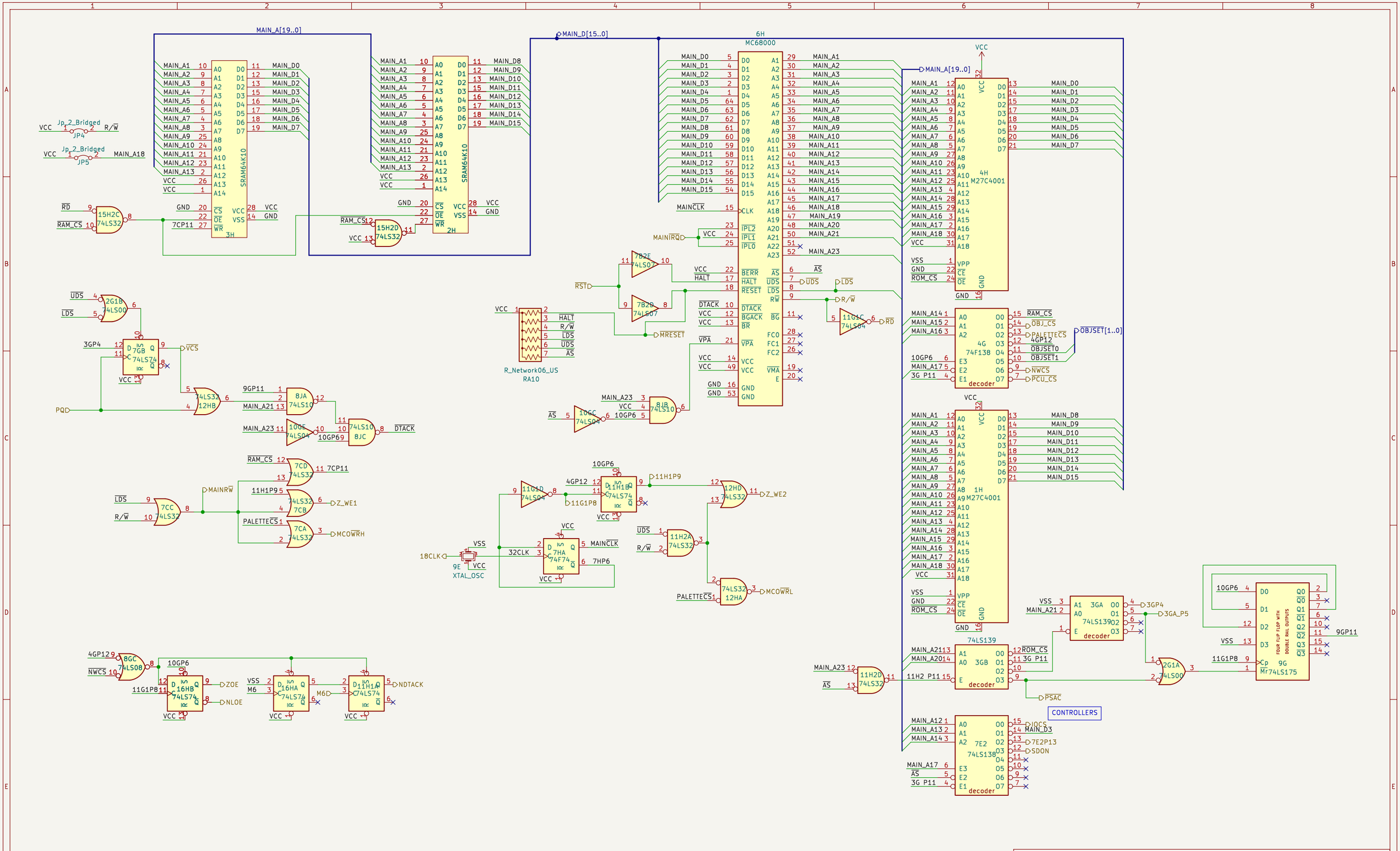

JOTEGO
www.patreon.com/jotego
JOTEGO

Sheet: /main/
File: main.kicad_sch

Title: Premier Soccer

Size: A3	Date: 2025-12-15	**Rev: José Tejada G.**
KiCad E.D.A. 8.0.9		Id: 2/11

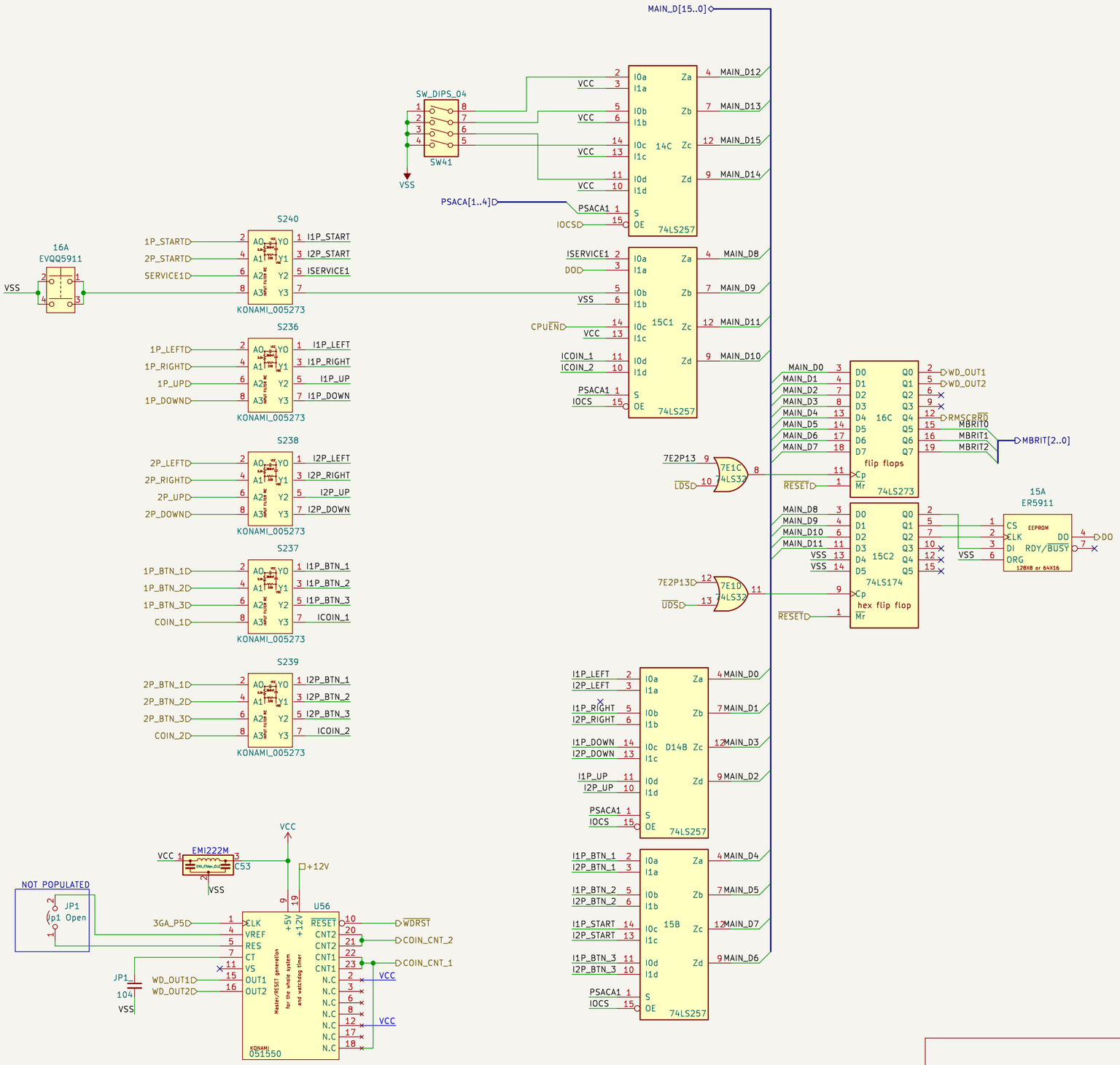

JOTEGO
www.patreon.com/jotego
JOTEGO

Sheet: /io_cabinet/
File: io_cabinet.kicad_sch

Title: Premier Soccer

Size: A3	Date: 2025-12-15	**Rev: José Tejada G.**
KiCad E.D.A. 8.0.9		Id: 3/11

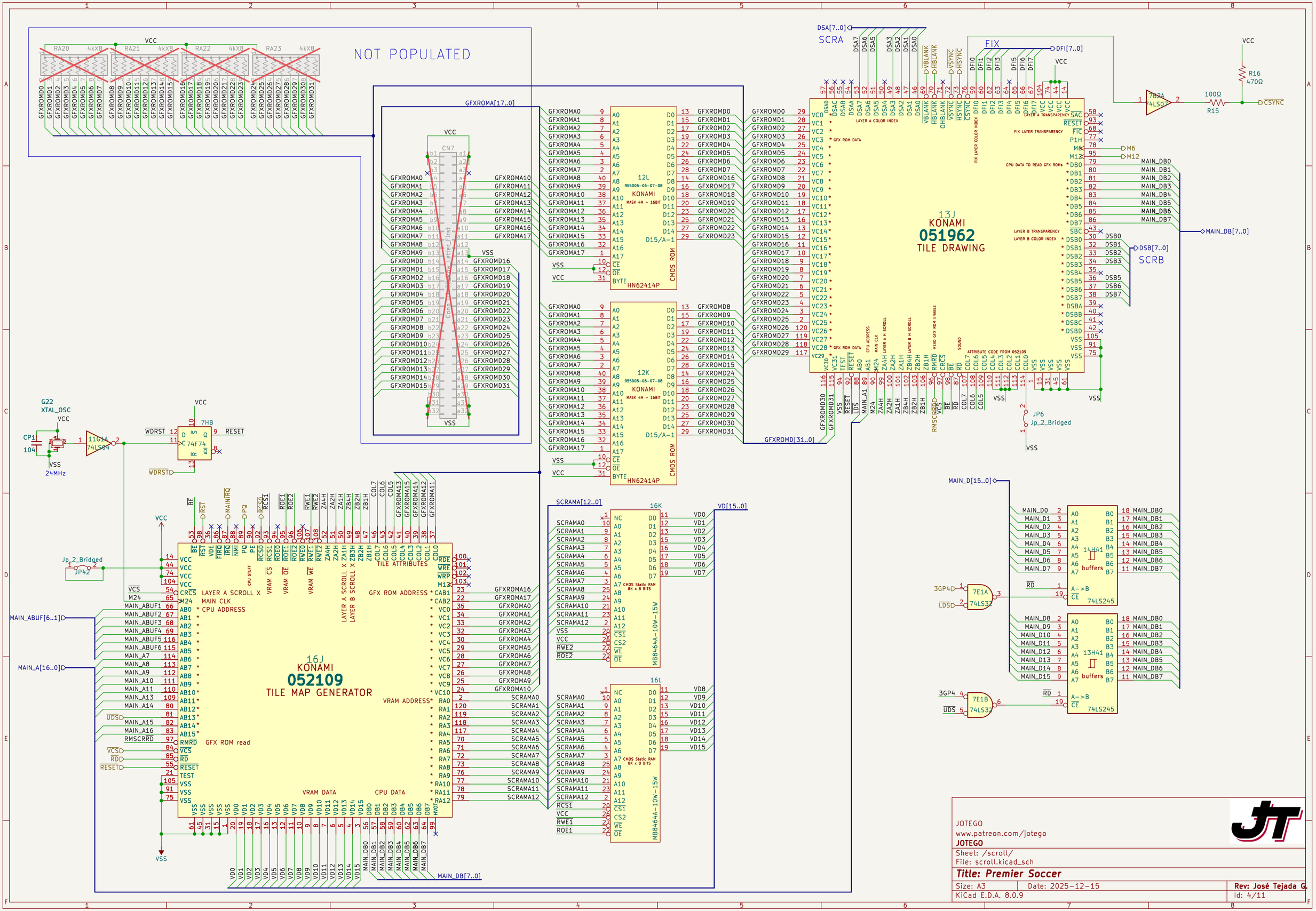

JOTEGO
www.patreon.com/jotego
JOTEGO

Sheet: /scroll/
File: scroll.kicad_sch

Title: Premier Soccer

Size: A3	Date: 2025-12-15	Rev: José Tejada G.
KiCad E.D.A. 8.0.9		Id: 4/11

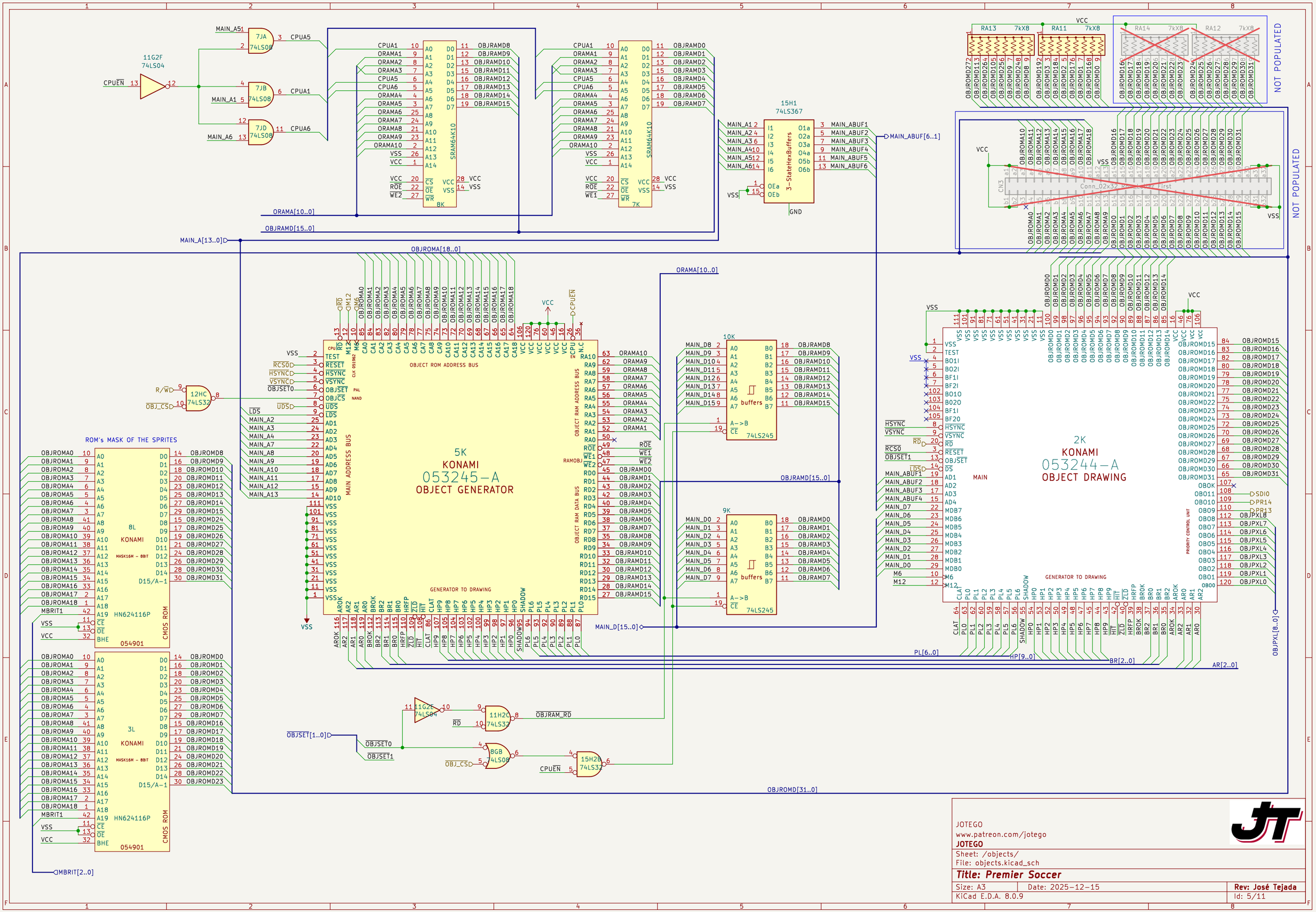

JOTEGO
www.patreon.com/jotego
JOTEGO

Sheet: /objects/
File: objects.kicad_sch

Title: Premier Soccer

Size: A3	Date: 2025-12-15	**Rev: José Tejada**
KiCad E.D.A. 8.0.9		Id: 5/11

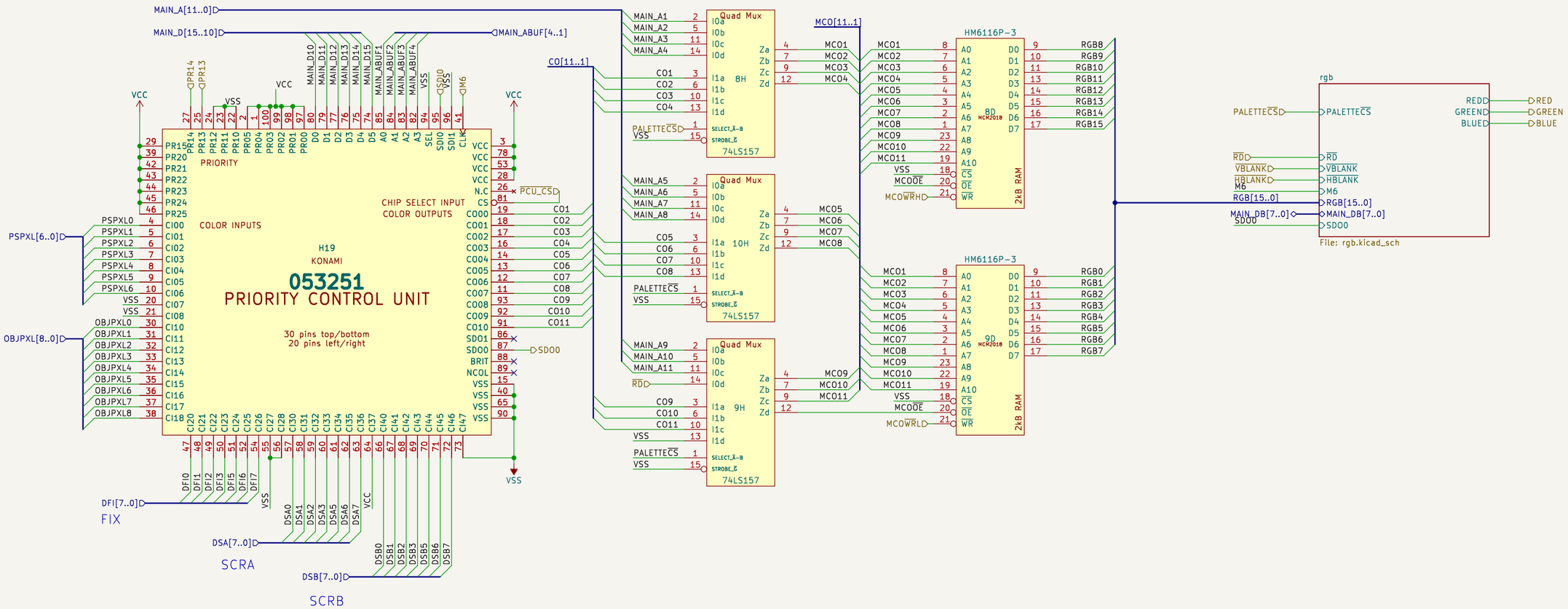

JOTEGO
www.patreon.com/jotego
JOTEGO

Sheet: /colmix/
File: colmix.kicad_sch

Title: Premier Soccer

Size: A3	Date: 2025-12-15	**Rev: José Tejada G.**
KiCad E.D.A. 8.0.9		Id: 6/11

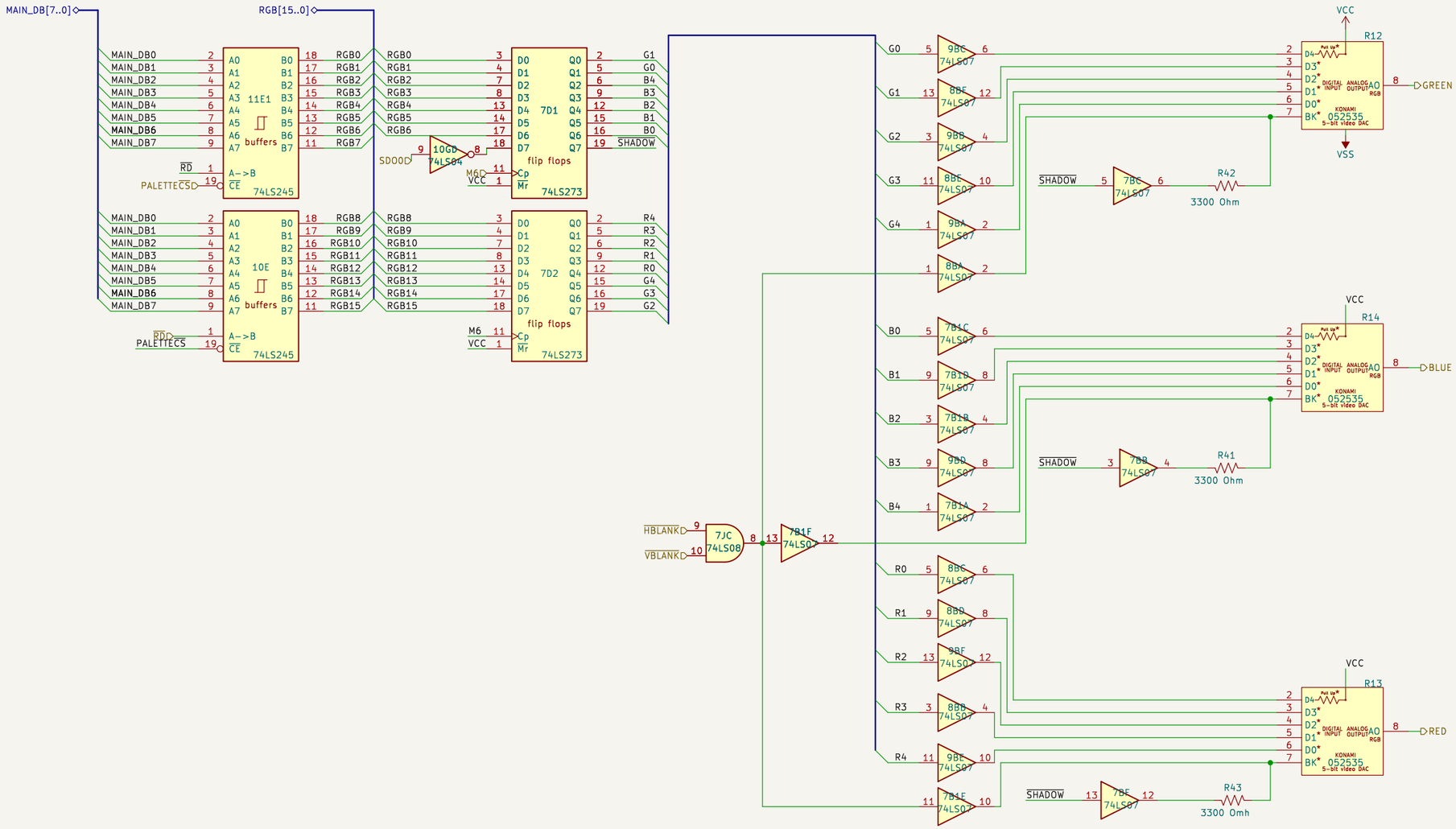

JOTEGO
www.patreon.com/jotego
JOTEGO

Sheet: /colmix/rgb/
File: rgb.kicad_sch

Title: Premier Soccer

Size: A3	Date: 2025-12-15	**Rev: José Tejada G.**
KiCad E.D.A. 8.0.9		Id: 7/11

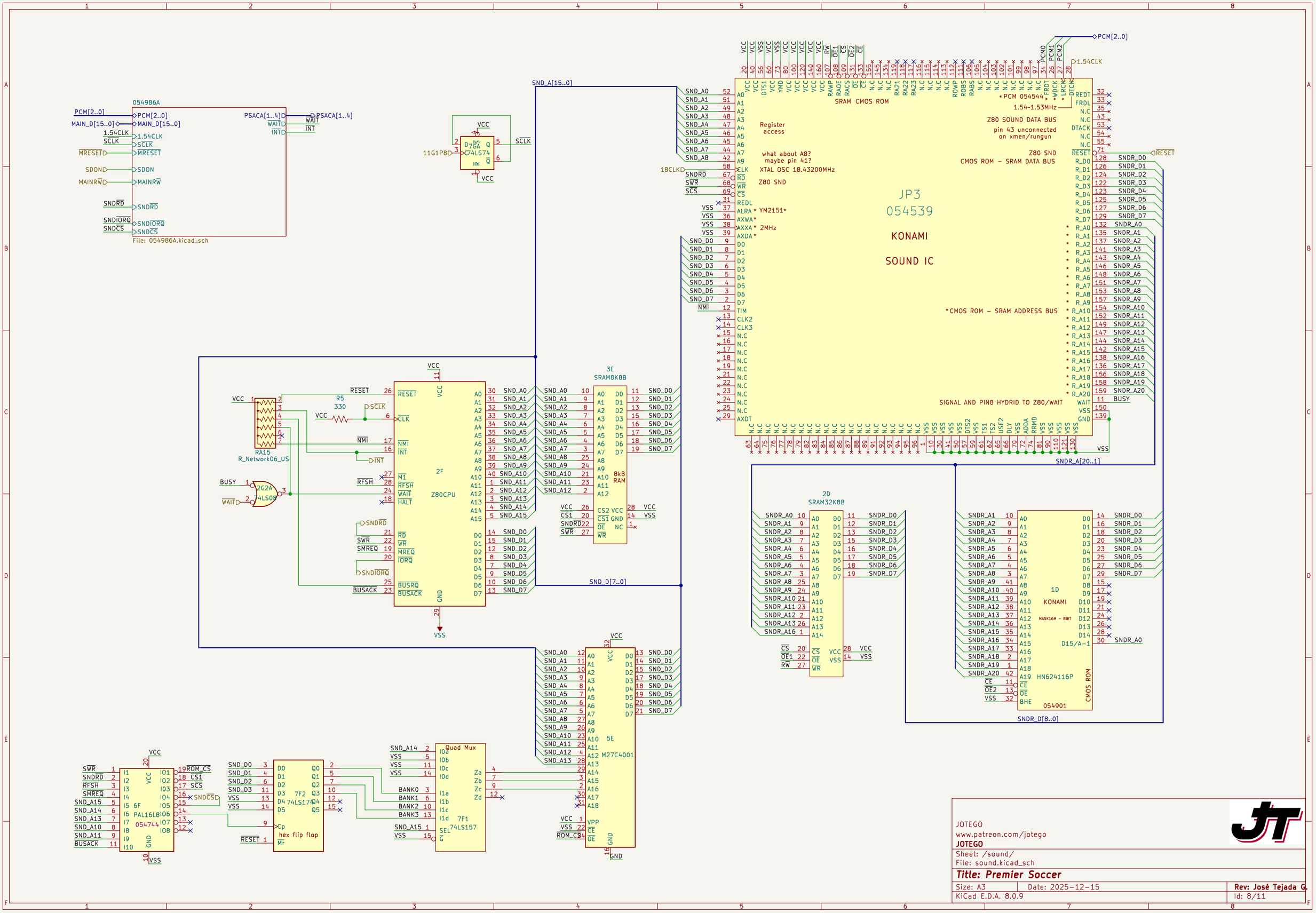

JOTEGO
www.patreon.com/jotego
JOTEGO

Sheet: /sound/
File: sound.kicad_sch

Title: Premier Soccer

Size: A3	Date: 2025-12-15	**Rev: José Tejada G.**
KiCad E.D.A. 8.0.9		Id: 8/11

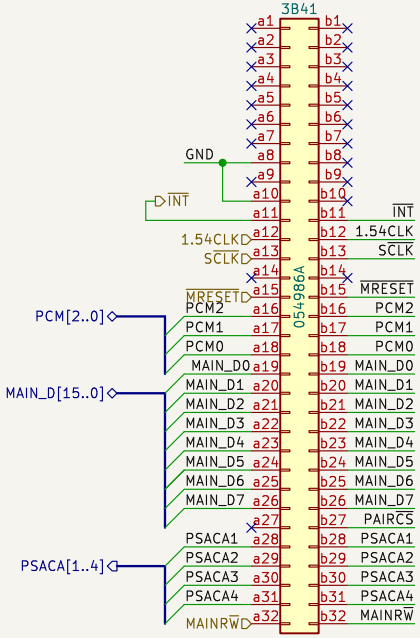

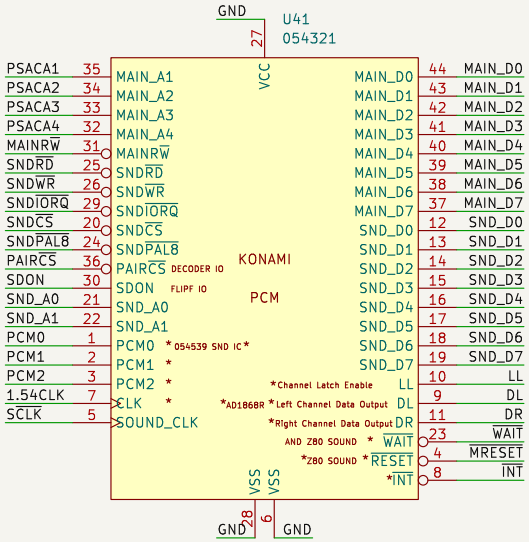

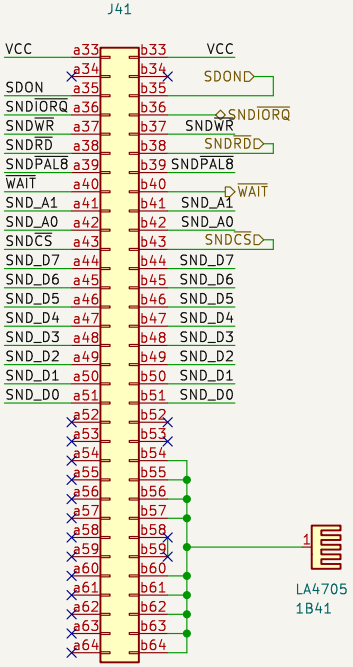

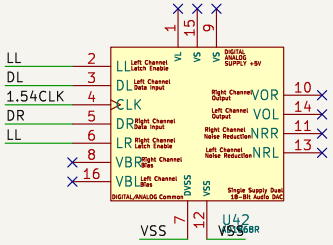

JOTEGO
www.patreon.com/jotego
JOTEGO

Sheet: /sound/054986A/
File: 054986A.kicad_sch

Title: Premier Soccer

Size: A4	Date: 2025-12-15	Rev:
KiCad E.D.A. 8.0.9		Id: 9/11

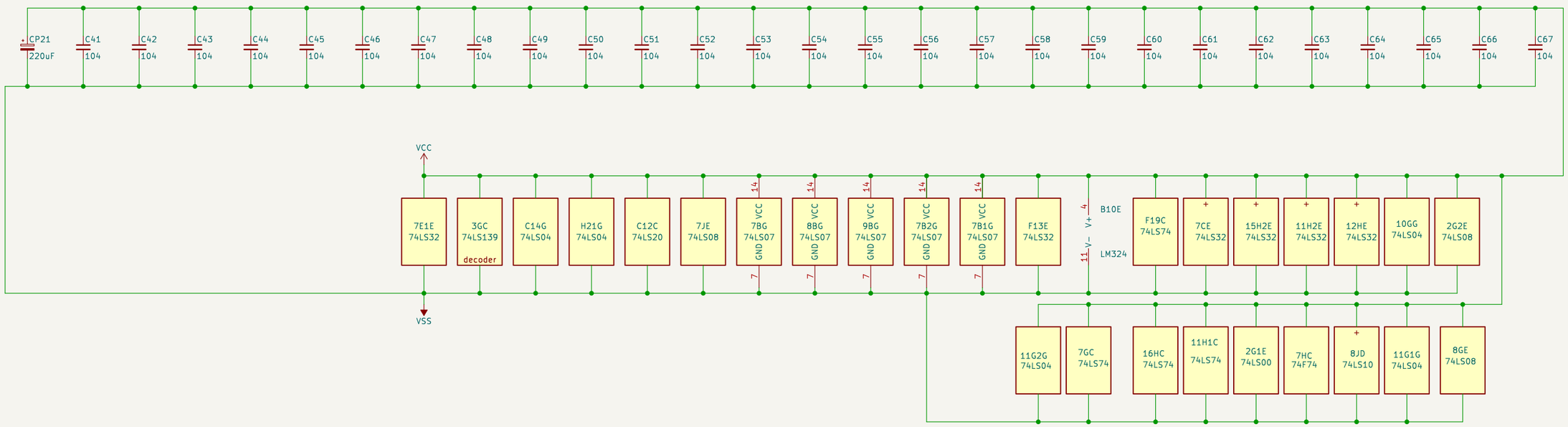

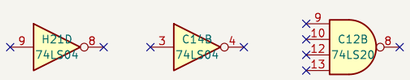

JOTEGO
www.patreon.com/jotego
JOTEGO

Sheet: /capacitors/
File: capacitors.kicad_sch

Title: Premier Soccer

Size: A3	Date: 2025-12-15	**Rev: José Tejada G.**
KiCad E.D.A. 8.0.9		Id: 10/11

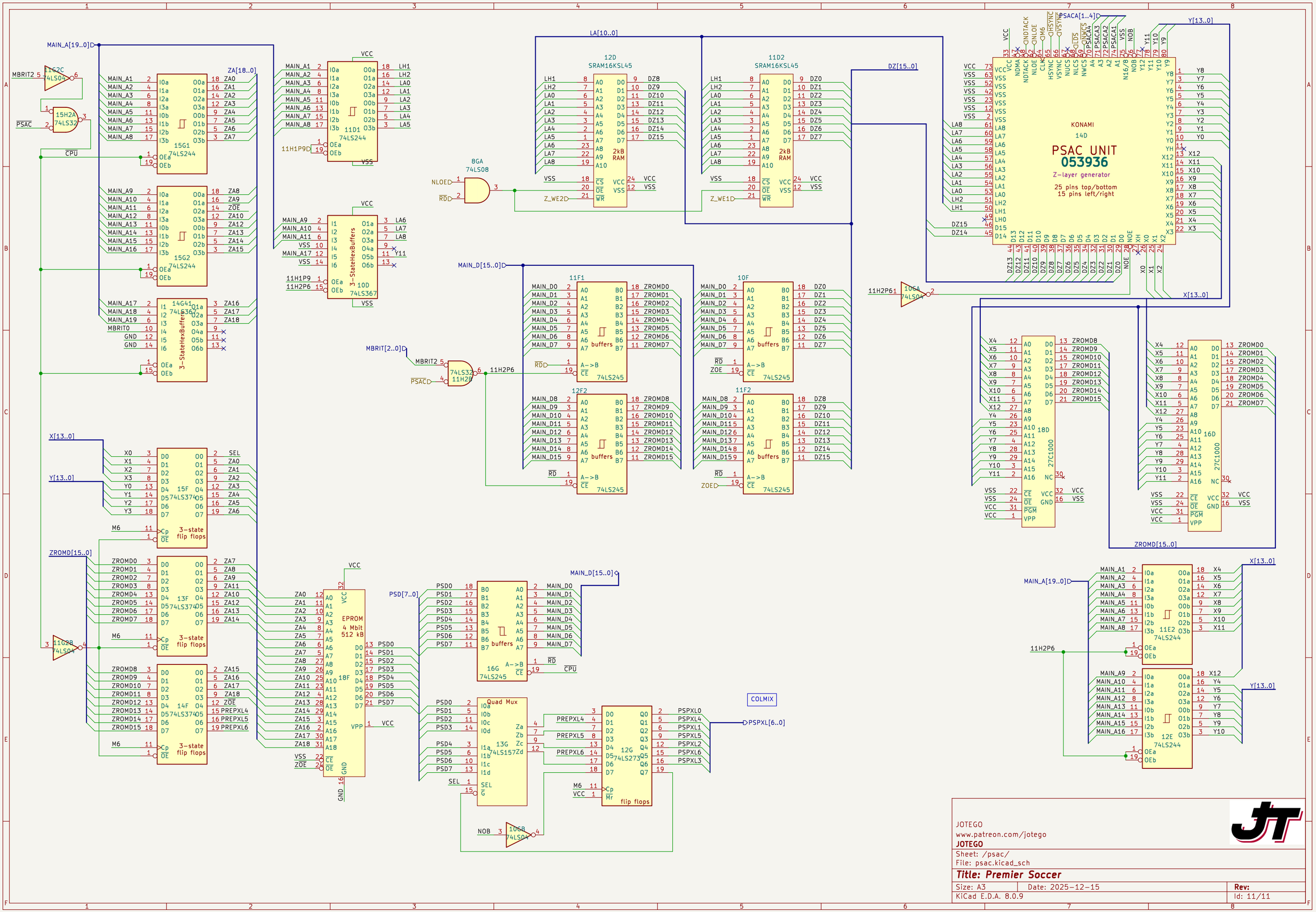
KONAMI
14D
PSAC UNIT
053936
Z-layer generator
25 pins top/bottom
15 pins left/right
JOTEGO
www.patreon.com/jotego
JOTEGO
Sheet: /psac/
File: psac.kicad_sch
Title: Premier Soccer
Size: A3
Date: 2025-12-15
Rev:
KiCad E.D.A. 8.0.9
Id: 11/11