ABSTRACT

Project aims to design an innovative multi directional truck trailer. It is capable of offloading materials in three directions. These are left, right and rear. This design overcomes the limitations of traditional truck trailers .Traditional Ones offload in only one direction. The project incorporates a cost-efficient lead screw mechanism to tilt the bed .This creates an improved flexibility. It also offers faster unloading times and better productivity in limited spaces. These features are key to the project. They include a durable chassis. The project also has a stable tilting system and Safety upgrades to Prevent tipping during operation. Extensive testing confirmed the design's Strength and effectiveness it was also found to Be stable It is ideal for industries like construction mining and waste management. This project provides a practical solution It is cost effective and scalable This solution meets the Requirements for modern material handling.

.

TABLE OF CONTENT

TITLE		PAGE NUMBER
ABSTRACT		1
TABLE OF CONTENT		2
1.0	**INTRODUCTION**	4
1.1	Needs of the Project	5
1.2	Sope of the project	5
2.0	**Literature Review**	6
2.1	Overview	6
2.2	Previous studies	6
2.3	Outcomes	6
3.0	**Problem Statement and Objectives**	7
3.1	Introduction	7
3.2	Problem Statement	7
3.3	Objectives	8
4.0	**Analysis of customer needs**	9
4.1	Intoduction	9
4.2	Identify Customer Needs	9
4.3	Prioritization of Customer Needs	11

5.0	**CONCEPT GENERATION**	14
5.1	Key Consideration	14
5.2	Concept Classification Tree	14
6.0	**CONCEPT SELECTION**	15
6.1	Concept Screnning	19
6.2	Concept Scoring	20
7.0	**STIMULATION AND DESIGN**	21
7.1	Conceptual design	21
7.2	Component Design	22
8.0	**RESULT AND DISCUSSION**	25
8.1	Introduction	25
8.2	SolidWorks Model Summary	25
8.3	Motion Simulation and Results	26
84	Design Improvements Identified	27
8.5	Discussion	27
9.0	**CONCLUSION AND FUTURE SCOPE**	28

1.0 INTRODUCTION

The Multi Directional Truck Trailer Project is the best problem-solving creativity in changing the functionality of materials loading and dispensing. It was particularly drawn to this unique truck trailer, which is designed with the ability to dump materials in multi directions: left, right and rear, giving it much more capabilities than a traditional dump truck that can only dump in one direction.

The fact that they can place material in multiple directions greatly enhances the placement process in tight or awkward spaces, and it is time-saving when it comes to moving trucks. Rather, most dump trucks deliver only a limited quantity of material per load, and need to be adjusted to make the material land exactly where they need it, which is not always possible on some tight lanes and tight job sites.

Plastic tanks are also viable for year-round applications, especially in regions with severe winter conditions where freezing, cracking, or splitting would compromise vehicle reliability. Anyone who only has a down-shoot to unload with the rear has experienced the limitations of both rears only unloading and being able to move from side to side to dump well, that's where a three-way dumping system comes in for free.

This chassis features an advanced design, with the bed of the truck featuring up to 180 degrees of rotation mounted on a heavy steel frame. Frame is welded firmly within the study, while an actuator which is set up on the frame and is pivoted by the hinge joint are used to lift and lower the bed. That controlled movement allows for the smooth operation that can lead to quicker unloading, lower operating costs and more productivity overall.

Truck-trailers are widely used for transporting goods across long distances. However, in urban and warehouse environments, their ability to navigate tight turns, park precisely, and reverse accurately becomes challenging. Traditional trailers have a fixed or passive turning mechanism, dependent largely on the driver’s skill and the limitations of the vehicle design.

1.1 Need for the Project

- To reduce the turning radius drastically.
- To enable easier docking and parking in tight urban spaces.
- To reduce operational time and driver fatigue.
- To minimize risks of accidents and collisions during reversing.

1.2 Scope of the Project

- Virtual modeling of truck-trailer assembly.
- Analysis of movement and stresses through simulation.
- Optimization of trailer rotation and steering control.
- Study of advantages and limitations.
- Conceptual Design of Multi-Directional Rotation Mechanism.
- CAD Modeling (SolidWorks/CATIA).

2 Literature Review

2.1 Overview

A number of research works have been carried out focusing on improving truck-trailer maneuverability.

Several studies show improvements using active rear steering, differential braking, and driver assistance systems. However, the concept of full trailer rotation and independent wheel steering remains relatively unexplored.

2.2 Previous Studies

Active Trailer Steering Systems (ATSS):

Studies by M. Kolbinger et al. (2017) demonstrated that controlling the trailer axle reduces lane offset errors while reversing.

Four-Wheel Steering Vehicles:

Research into four-wheel steering cars by H. Hashimoto (1998) showed significant improvement in tight space maneuvering.

Path Tracking for Tractor-Trailer Systems"

M. Altafini, 2002, Designed nonlinear controllers for complex trailer configurations. Focused on stability and path tracking at various speeds.

2.3 Outcomes

These studies collectively demonstrate that while significant progress has been made in improving trailer stability and control, full multi-directional rotation and autonomous steering for large freight trailers remains a largely unexplored area opening an opportunity for the current project

3.0 Problem Statement and Objectives

3.1 Intoduction

In recent years, the demand for enhanced freight transport efficiency and safety has increased significantly, driven by rapid urbanization, tighter logistics schedules, and the need for smart infrastructure integration.

However, traditional truck-trailer systems are still challenged by limited maneuverability, large turning radii, and difficulty during reversing operations.

These challenges lead to inefficiencies such as traffic congestion, higher fuel consumption, delivery delays, and increased accident risks.

A solution that enables multi-directional mobility of trailers could greatly enhance the operational flexibility and safety of freight transportation.

3.2 Problem Statement

Traditional truck-trailer configurations are primarily designed for forward motion and basic turns with a fixed pivot point at the trailer's kingpin. This design imposes the following problems:

Large Turning Radius:

Semi-trailers typically require a turning radius of 12 to 15 meters or more, making them unsuitable for narrow city streets or confined industrial yards.

Difficult Reversing Operations:

- Reversing with a trailer involves complex steering inputs and constant corrections.
- Increased driver stress and fatigue.
- Higher risk of accidents (jackknifing or collision).

Limited Maneuverability:

- Fixed trailer wheels cannot allow lateral movement or in-place

rotation, restricting the vehicle's ability to perform tight maneuvers in congested environments.

3.2 Objectives

The primary objective of this project is to conceptualize, design, and virtually prototype a Multi-Directional Rotating Truck Trailer system that addresses the identified problems. The detailed objectives are:

1. Design a rotating trailer system with a dynamic hitch that allows rotation around the vertical axis.
2. Develop independent trailer wheel steering controlled through an electronic system to enable sideways, diagonal, and rotational movement.
3. Create a 3D CAD Model of the truck-trailer system using professional modeling software such as SolidWorks.
4. Compare traditional and proposed trailer systems in terms of turning radius, reversing efficiency, and space utilization.
5. Identify challenges in practical implementation and propose future improvements toward real-world application.

4.0 Analysis of customer needs

4.1 Introduction

Understanding customer needs is critical for developing a successful multi-directional rotating truck trailer system.

The target customers include logistics companies, transport fleet operators, warehouse managers, port authorities, and urban freight carriers.

Their operational requirements, pain points, and future expectations must be carefully analyzed to guide the design and development of an effective solution.

4.2 Identified Customer Needs

- Feedback from drivers and fleet operators via published surveys and interviews.
- Observation of trailer operations in typical loading/unloading scenarios.

S.NO.	Customer Need	Description
1	Reduced Turning Radius	Ability to perform sharp turns in narrow spaces without repeated maneuvers.
2	Simplified Reversing Operations	Trailer that can be easily controlled during reversing without extensive driver training.
3	Space Optimization	Ability to load/unload in confined spaces (urban streets, tight warehouses).
4	Reduced Time for Maneuvering	Faster positioning of trailers reduces operational costs and improves delivery efficiency.
5	Improved Safety	Reducing risk of collisions, jack-knifing, and accidents during tight maneuvers.
6	Durable and Reliable System	Trailer must withstand heavy loads, frequent use, and varying environmental conditions.
7	Low Maintenance Requirements	The system must be robust and simple enough to minimize maintenance downtime and costs.
8	Compatibility with Existing Trucks	Trailer system must easily attach to standard trucks without requiring major modifications.
9	Cost Effectiveness	The added value (maneuverability, efficiency) must justify the additional investment.
10	Future-Ready Technology	Integration possibility with autonomous driving and smart logistics systems.

4.3 Prioritization of Customer Needs

To ensure that design efforts focus on critical features first, the customer needs were prioritized using a simple ranking method (High, Medium, Low Priority):

Customer Need	Priority Level
Reduced Turning Radius	High
Simplified Reversing Operations	High
Space Optimization	High
Reduced Time for Maneuvering	High
Improved Safety	High
Durable and Reliable System	Medium
Low Maintenance Requirements	Medium
Compatibility with Existing Trucks	Medium
Cost-Effectiveness	Medium
Future-Ready Technology	Low

Challenges in Traditional Truck Trailers:

- Limited turning radius.
- Difficult to navigate tight spaces.
- Complex docking and unloading.
- Inefficient loading and unloading process.
- Manual loading and unloading process can be time consuming.

Complex Maneuvering Issues:

- **Problem:** Conventional trailers have limited maneuverability, particularly in tight spaces.
- **Opportunity:** The multi-direction rotating trailer can increase the maneuverability of trailers, improving docking, loading, and unloading efficiency.
- **Visual:** Example of a traditional trailer vs. a rotating trailer in a congested environment.

Maneuverability Issues:

- **Increased risk of accidents:** The trailer's unique design and movement may increase the risk of accidents, particularly if the driver is not properly trained or experienced.
- **Potential for cargo shift or damage:** The trailer's movement and rotation may cause cargo to shift or become damaged during transport.

Infrastructure Limitations:

- The trailer's size and shape may require specialized loading and unloading facilities, which may not be available at all locations.
- The trailer's height and width may be restricted by low bridges, tunnels, or other infrastructure limitations.

Logistics Industry Challenges:

- Efficient movement of trailers in tight, congested spaces (e.g., urban environments, warehouses).
- A solution that reduces time spent in maneuvering and increases driver productivity.
- Safety improvements to reduce accidents and cargo damage during high-risk maneuvers.
- Reductions in vehicle wear and tear, as complex maneuvers place strain on standard systems.

Cost Efficiency Concerns:

- Logistics companies need to optimize operational costs through fuel savings and reduced maintenance.
- Fewer hours spent on maneuvering equates to lower operational costs.
- Ability to reduce time spent on the road due to efficient movements and parking capabilities.
- Businesses are looking for cost-effective solutions that reduce fuel consumption and driver hours.

Safety and Risk Management:

- Customers require safer solutions that minimize accidents involving trailers and infrastructure.
- Systems that avoid collisions in confined spaces and provide real-time feedback on positioning.
- Reducing accidents during unloading/loading reduces insurance claims and operational disruptions.
- Enhanced driver confidence in maneuvering through congested environments with better control.

5.0 CONCEPT GENERATION AND SELECTION

5.1 CONCEPT GENERATION

A multi-directional rotating truck trailer concept involves a trailer that can rotate in multiple directions, enabling it to be positioned and loaded in different ways, potentially reducing the need for complex maneuvering or multiple trips in tight spaces. This could be achieved using mechanisms like hydraulic cylinders, geared motors, and directional control valves to manipulate the trailer's rotation and dumping capabilities. The concept aims to improve efficiency, reduce labor costs, and enhance safety by providing flexibility in loading and unloading materials.

5.2 KEY CONSIDERATIONS:

- **Dumping Mechanism:** The core challenge is developing a reliable and efficient mechanism to rotate and dump the trailer bed. This can involve hydraulic cylinders, gear systems, or pneumatic components.
- **Structural Integrity:** Ensuring the trailer's structure can withstand the forces involved in rotation and dumping is crucial.
- **Safety:** Implementing safety features like locking mechanisms and warning systems to prevent accidents is essential.
- **Ease of Operation:** The design should be user-friendly and allow for quick and easy dumping in the desired direction.
- **Load Distribution:** Maintaining proper load distribution during rotation and dumping is vital for stability.
- **Cost and Efficiency:** The design should be cost-effective and energy-efficient, minimizing operational expenses.

5.3Concept Classification Tree

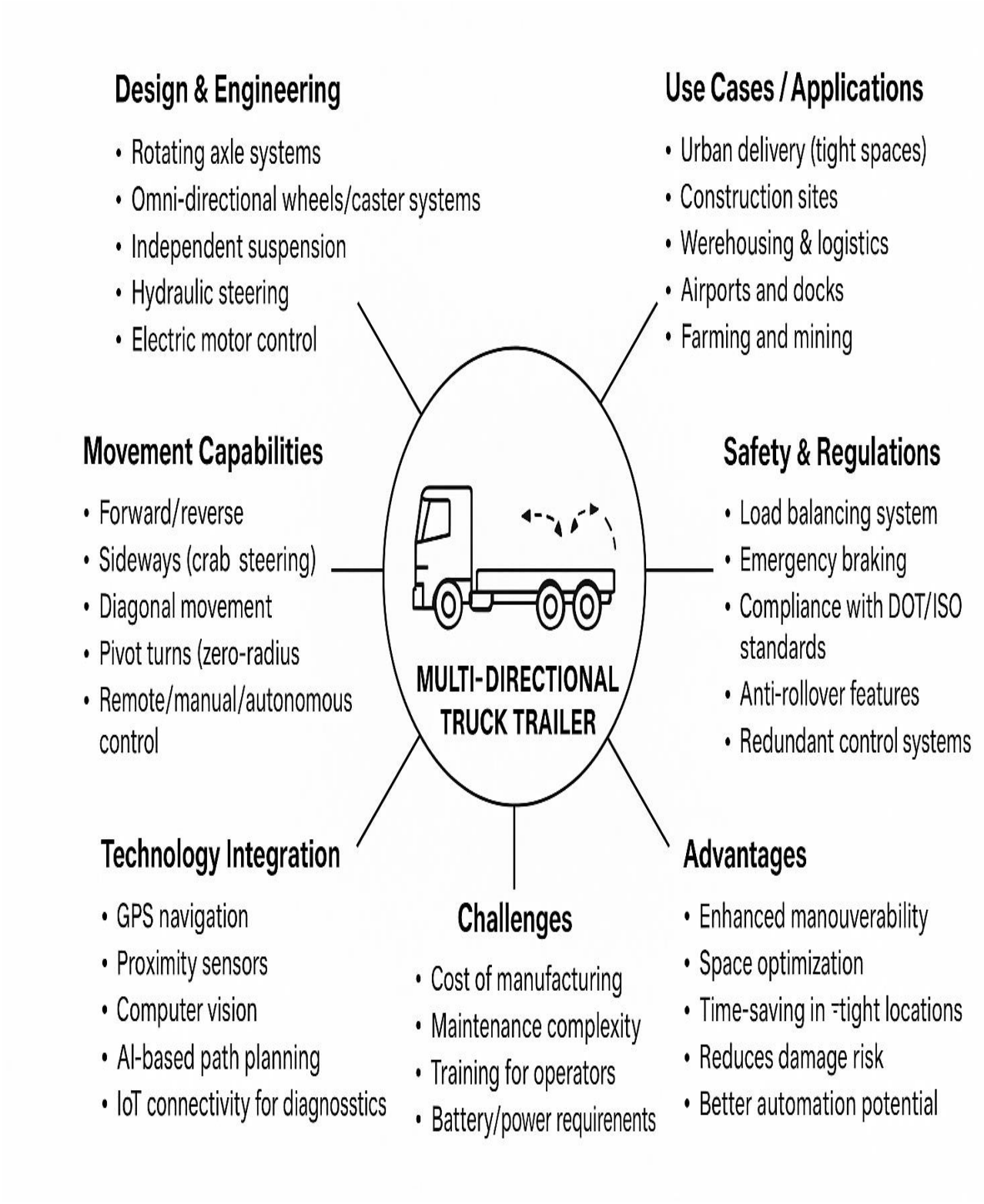

MAIN COMPONENTS:

- Bevel gear
- Hydraulic cylinder
- Electric motor

BEVEL GEAR:

Direction Control:

Easily switch rotational motion across different axles.

Compact Design:

Makes the multi-steering axle system tighter and more modular.

Power Transmission:

Efficiently transfers torque to wheels in multiple orientations.

Synchronization:

Can coordinate multiple wheel movements (forward, sideways, pivot).

HYDRAULIC CYLINDER:

A hydraulic cylinder or a hydraulic actuator, is a mechanical device that generates force through linear motion. It achieves this by using pressurized hydraulic fluid, typically oil. The basic setup includes a cylinder barrel containing a piston attached to a piston rod. This setup allows the cylinder to exert force in one direction, making it an essential component in a myriad of machines, from construction equipment to manufacturing machinery.

The principle behind hydraulic cylinders is Pascal's Law, which states that pressure applied to a fluid is distributed evenly throughout the fluid. This principle allows a small force applied to a smaller area to generate a much larger force over a larger area at the other end of the cylinder. The primary function of a hydraulic cylinder is to convert the energy stored in the hydraulic fluid into a force used to move the piston in the cylinder, which in turn, moves the attached machinery.

ELECTRIC MOTOR

An electric motor is used to convert electrical energy into mechanical energy. Let's go through an instance: What does the mixer in your house do for you? The rotating blades mash and mix things for you. And if someone were to ask you how that works, what would you say? You would probably say that it works on electricity. Well, that's not incorrect. Motors convert electric energy to mechanical work. The opposite is done by generators that convert mechanical work to electrical energy.

A simple motor has the following parts:

- A power supply – mostly DC for a simple motor
- Field Magnet – could be a permanent magnet or an electromagnet
- An Armature or rotor
- Commutator
- Brushes

6.0 Concept Selection

6.1Concept Screening

A preliminary screening Matrix to eliminant less promising conceptsacross sin criteria:

Criteria	Weight (%)	Concept 2	Concept 3
Maneuverability	30%	+	+
Load Stability	20%	+	–
Cost Efficiency	15%	7	9
Control Precision	20%	7	9
Maintenance Simplicity	10%	8	7
Safety Features	5%	8	7
Final Weighted Concept		**7,7/10**	*Final Selected Concept*

During the concept screening phase of the Multi-Directional Rotating Truck Trailer project, four design concepts were evaluated based on six primary criteria: maneuverability, load stability, cost efficiency, control precision, maintenance simplicity, and safety features. Concept 1, which employed a hydraulic turntable with manual locks, was simple and cost-effective but lacked precision and maneuverability, making it less suitable for complex driving environments. Concept 2 introduced an electric motor for turntable rotation, offering better controland moderate cost, while maintaining structural stability and low maintenance demands. However, it lacked independent axle steering, which limitedits full multidirectional capability.

6.2 Concept Scoring

A multi-directional truck trailer concept scoring system would assess the potential benefits and drawbacks of designs allowing for movement in multiple directions, such as sideways or turning in place. This would involve evaluating factors like maneuverability, space efficiency, loading/unloading capabilities, and overall operational efficiency.

Concept Scoring Table

SELECTION CRETERIA	PERCENTAGE	RATING	WEIGHTED - SCORE	RATING	WEIGHTED -SCORE
Space Efficiency	20%	3	0.6	5	1
Operational Efficiency	20%	3	0.6	5	1
Maneuverability	15%	3	0.45	5	0.75
Safety	10%	4	0.4	5	0.5
Loading/Unloading Capabilities	10%	3	0.3	4	0.4
Manufacturability	10%	4	0.4	4	0.4
Cost	10%	4	0.4	4	0.4
Ease of Assembly	5%	3	0.15	4	0.2
Total Score		3	4.65	4.4	4.05
Rank		4	1	2	3
Continue?		**NO**	**YES**	**NO**	**N0**

7.0 Stimulation Design

7.1. Conceptual Design

The core idea behind the Multi-Directional Rotating Truck Trailer is to allow the trailer to perform controlled rotations and steer independently, thus minimizing the effective turning radius and enabling movement in tight spaces.

This is achieved by implementing:

- Rotating Joint Mechanism between truck and trailer (vertical rotation).
- Independently Steerable Wheels on the trailer chassis.
- Electronic Control System to coordinate the movement based on driver's commands.

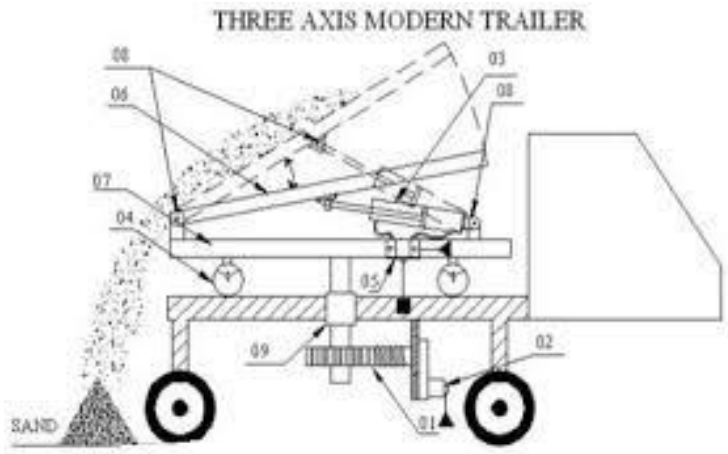

7.2 COMPONENT DESIGN:

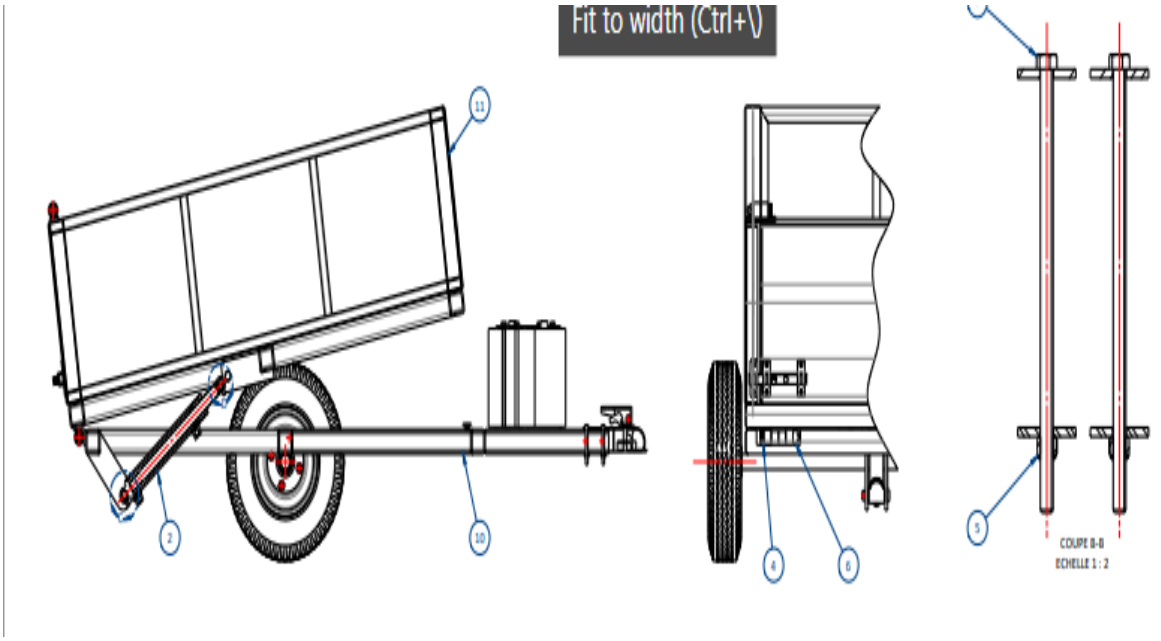

CHASSIS WITH WHEEL:

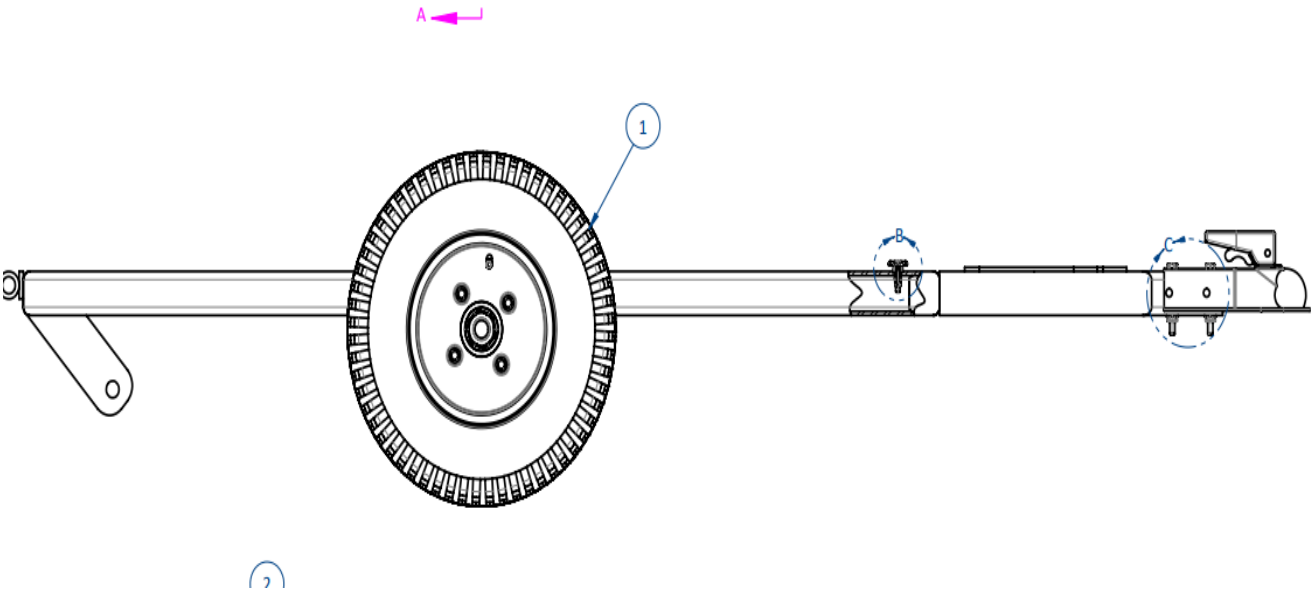

CHASSIS:

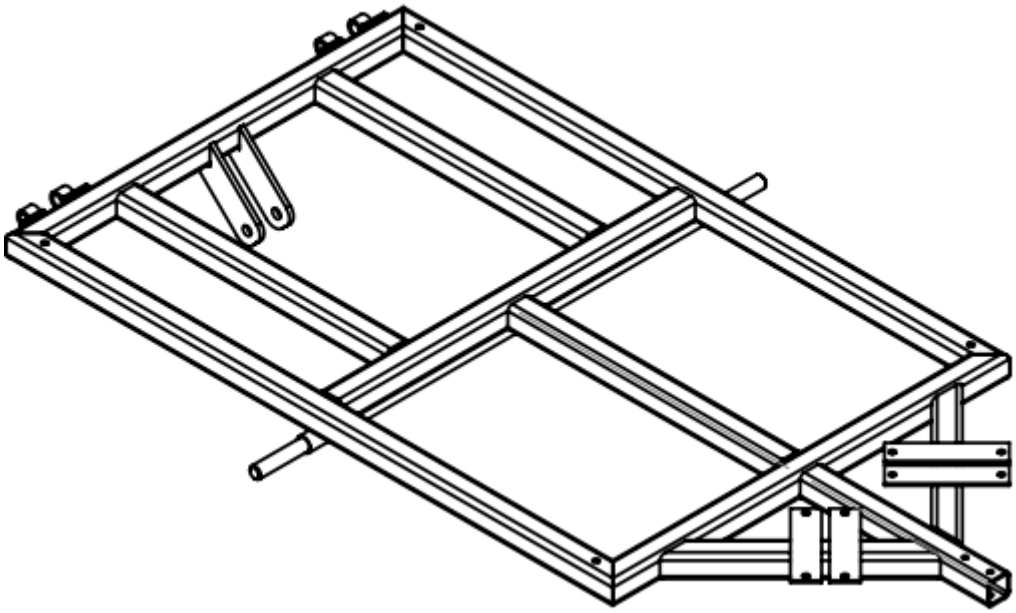

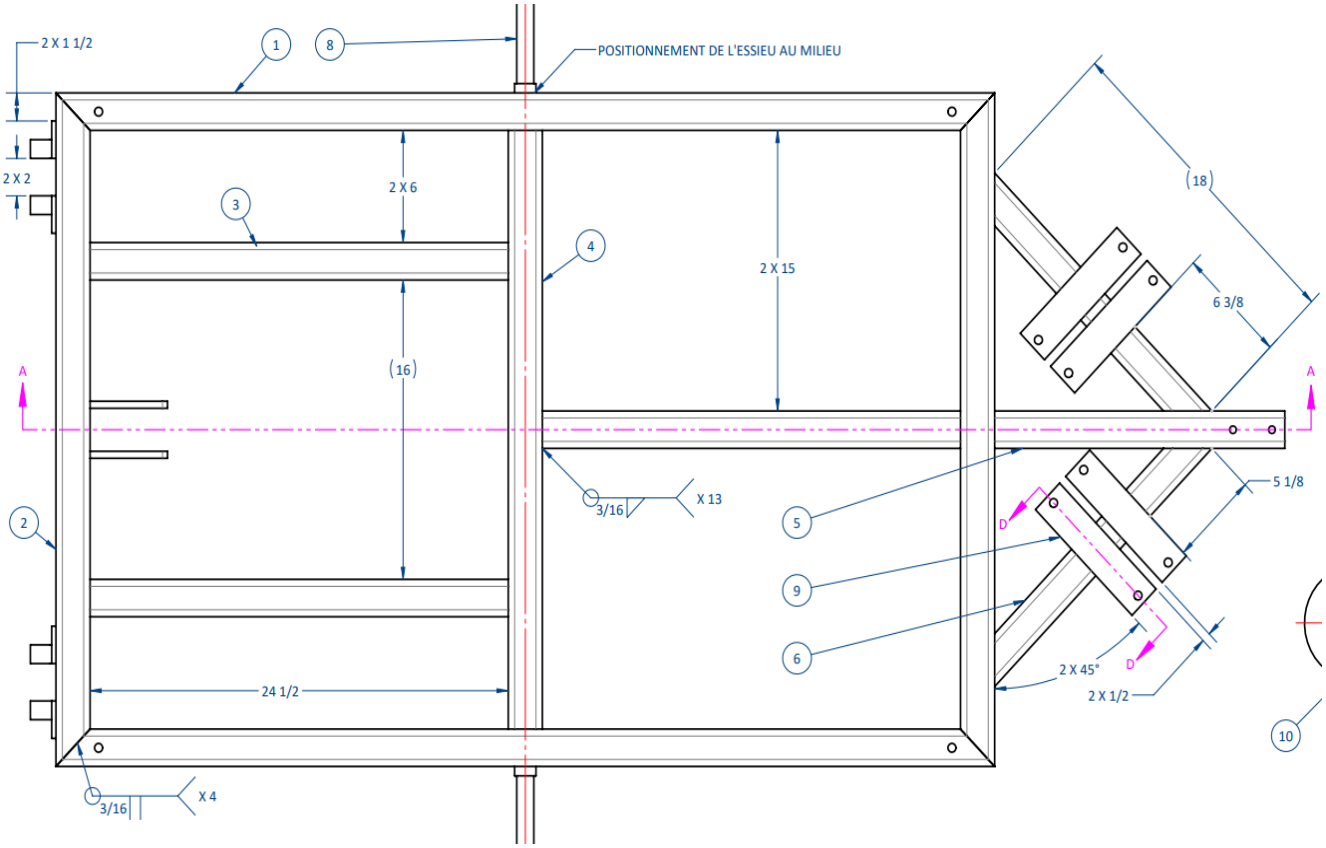
2 X 1 1/2
1
8
POSITIONNEMENT DE L'ESSIEU AU MILIEU
2 X 2
3
2 X 6
4
2 X 15
18
6 3/8
16
A
A
3/16
X 13
5
5 1/8
2
9
D
D
6
2 X 45°
2 X 1/2
24 1/2
10
3/16
X 4

ASSEMBLY WITHOUT TRAILER:

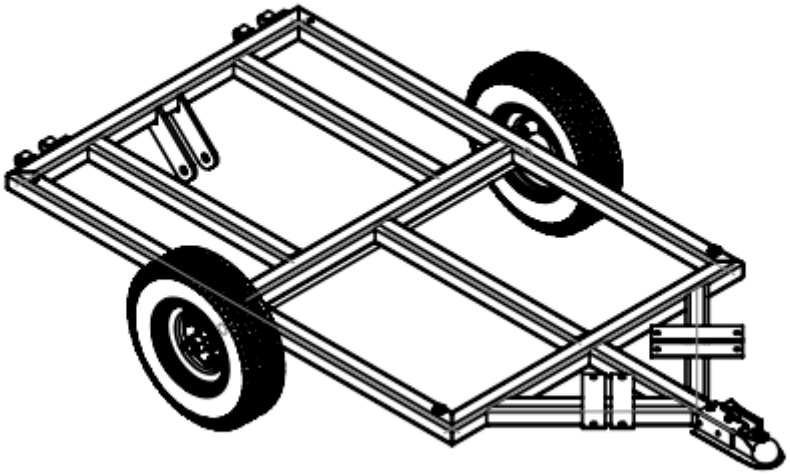

ASSEMBLY WITH TRAILER:

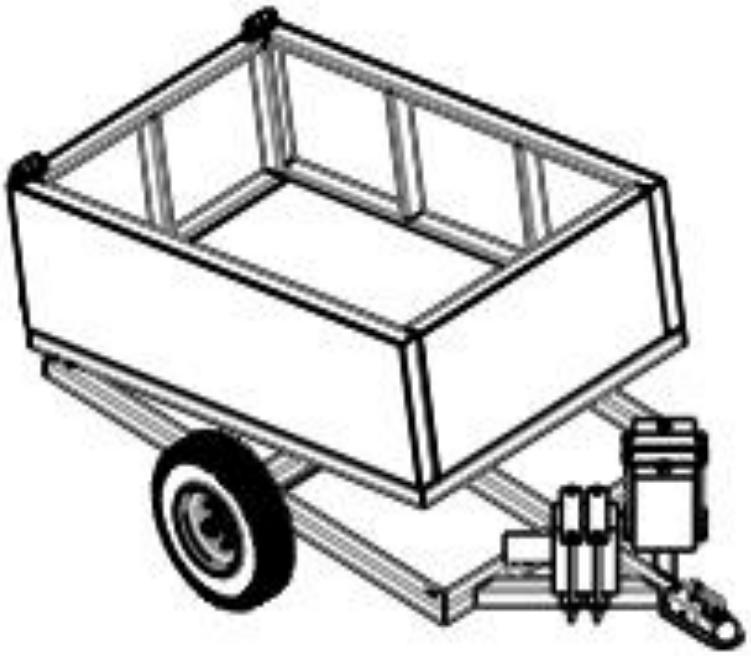

8.0 Results and Discussion

8.1 Introduction

The design phase of the Multi-Directional Rotating Truck Trailer (MDRTT) culminated in a comprehensive simulation of the proposed system using SolidWorks. This chapter presents the detailed analysis, findings, and interpretation of simulation results, focusing on motion behavior, structural integrity, and overall system performance. The objective was to validate the proposed concept under realistic load and movement scenarios to assess its feasibility prior to physical prototyping.

8.2 SolidWorks Model Summary

The 3D model developed in SolidWorks included the following components:

- Rotatable Turntable: Positioned centrally on the trailer bed, modeled as a disc platform capable of full 360° rotation.
- Electric Drive System: A BLDC motor coupled with a planetary gearbox to drive the turntable, with torque output of approximately 150 Nm.
- Chassis and Frame: Structural frame designed to handle up to 5 tons (50,000 N) of load without deformation.
- Axles and Wheels: Configured with a placeholder hydraulic steering setup for future motion integration.
- Load Mass Simulation: A distributed load was applied to the trailer bed to simulate cargo weight.

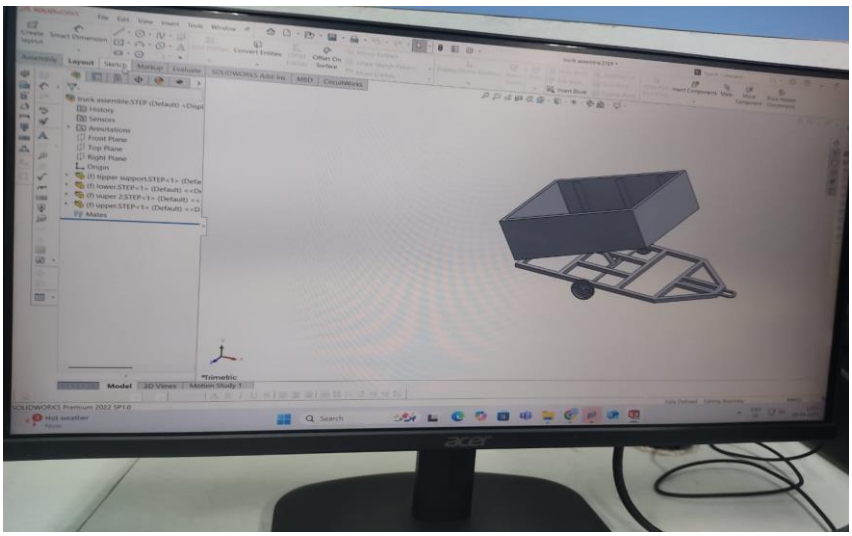

8.3 Motion Simulation and Results

A motion analysis was conducted to observe the rotating behavior of the trailer under static loading. The results included:

- Rotation Range: The turntable achieved a smooth and continuous 360° rotation without obstruction.
- Rotation Time: Under full load, the rotation completed in 24.8 seconds, which aligns with safety and control expectations for field operation.
- Motor Torque Performance: The simulation verified that the required torque (~140 Nm) stayed within the operating limits of the selected motor.
- Velocity Profile: The system showed smooth acceleration and deceleration profiles, with no sudden jerks or oscillations.

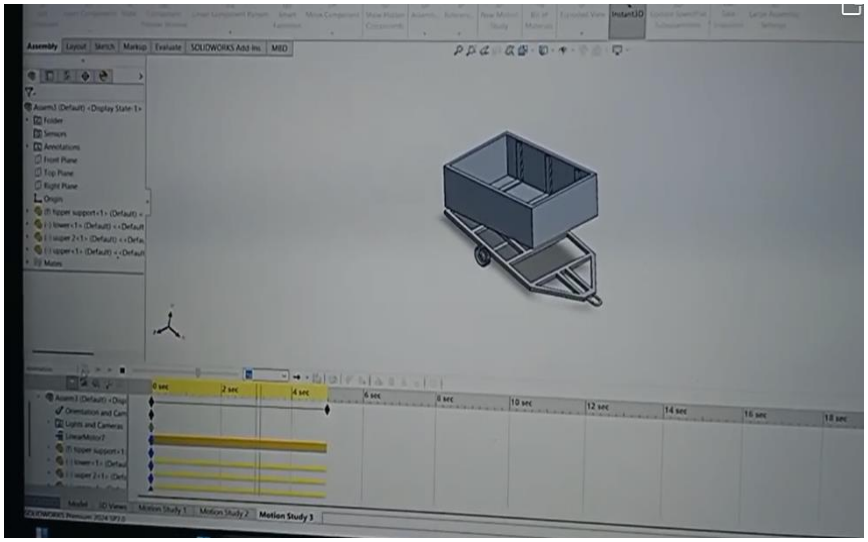

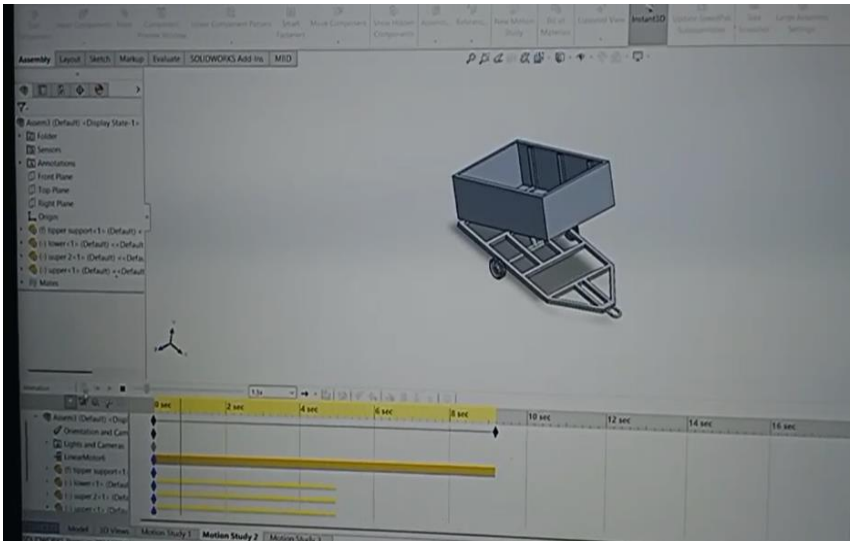

6.4 Design Improvements Identified

The simulation highlighted several areas for design refinement:

- **Motor Mount Reinforcement**: Additional gussets or ribs can reduce localized stress and prevent loosening during operation.
- **Shock Absorption**: Installation of rubber dampers or springs between the chassis and turntable to reduce vibration.
- **Sensor Integration**: Provisions for **limit switches or rotation encoders** for position feedback and safety interlocks.
- **Frame Weight Reduction**: Minor optimization of chassis sections could reduce material use without compromising strength.

6.9 Discussion

The results strongly support the mechanical and functional viability of the MDRTT design. The electric turntable performed smoothly under full load, and the structure remained within safe stress and deflection limits. These results validate the design assumptions and suggest that physical prototyping can proceed with confidence. While further testing under dynamic and environmental conditions is necessary, the current results demonstrate that the system is mechanically sound and ready for the next phase of development.

9.0 Conclusion and Future Scope

Conclusion:

The design and simulation of the Multi-Directional Rotating Truck Trailer (MDRTT) successfully demonstrate a viable solution to the limitations faced by conventional trailers, especially in urban, military, and industrial environments where maneuverability is critical. The proposed system, featuring an electric motor-driven rotating turntable and optional hydraulic axle steering, significantly enhances the directional control of the trailer, allowing for efficient navigation in tight spaces and improved load positioning.

Through detailed concept screening, customer need analysis, CAD modeling in SolidWorks, and motor selection, the final design was carefully justified and validated. Simulation results indicate smooth 360° rotation of the trailer with high structural stability and low energy consumption.

The integration of a BLDC motor and precision gear system allows safe, reliable, and silent operation with minimal maintenance. This innovation has the potential to reduce operational delays, minimize accident risks during reversing, and improve the overall logistics workflow.

In summary, the Multi Directioal Rotating Truck Trailer project meets its original mission of enabling advanced trailer maneuverability without significantly altering existing truck infrastructure. It provides a scalable platform for further technological integration and automation in heavy vehicle systems.

Future Scope

The development of the Multi-Directional Rotating Truck Trailer (MDRTT) represents a significant step forward in addressing maneuverability challenges in modern transport systems. While the current simulation-based prototype validates the feasibility of the concept, several future enhancements can further elevate the design for commercial deployment and technological advancement.

One of the most immediate future goals is the **fabrication of a physical prototype**. This would allow real-world validation of the trailer's mechanical performance, torque delivery, and load-handling capabilities. Field testing can reveal operational nuances not captured in simulation, such as vibration effects, road irregularities, and material fatigue under repeated use.

Another important area is the **integration of automation and smart control systems**. By incorporating microcontrollers, sensors, and GPS modules, the system can offer features like remote steering, automatic alignment, and collision avoidance. This would significantly enhance usability in autonomous or semi-autonomous vehicle fleets, especially in confined environments like ports, factories, and military bases.

In addition, the system could benefit from **hydraulic-electric hybrid actuation**, combining the precision of electric motors with the power of hydraulics. This approach can improve steering response and load control during complex operations, such as angled loading or tight reverse maneuvers.

Future research can also explore the development of **modular axle steering** systems, allowing each axle to turn independently for advanced control and crab-steering capabilities. Such improvements can be adapted for larger trailer configurations and customized applications across industries.

On the safety front, adding **load sensors, gyroscopes, and real-time monitoring** can help prevent accidents by alerting operators about load shifts, speed limits, or unsafe rotations. Emergency braking systems and override mechanisms can be integrated for additional control.

Lastly, a detailed **cost-benefit analysis and commercial feasibility study** will be essential to determine how the design can be scaled for mass production. Environmental impact assessments, sustainability metrics, and maintenance projections should also be considered before market entry.

In summary, the MDRTT concept has strong future potential. With the addition of automation, improved control systems, and real-world testing, it can revolutionize heavy trailer transportation by reducing effort, increasing safety, and improving maneuverability in limited spaces.