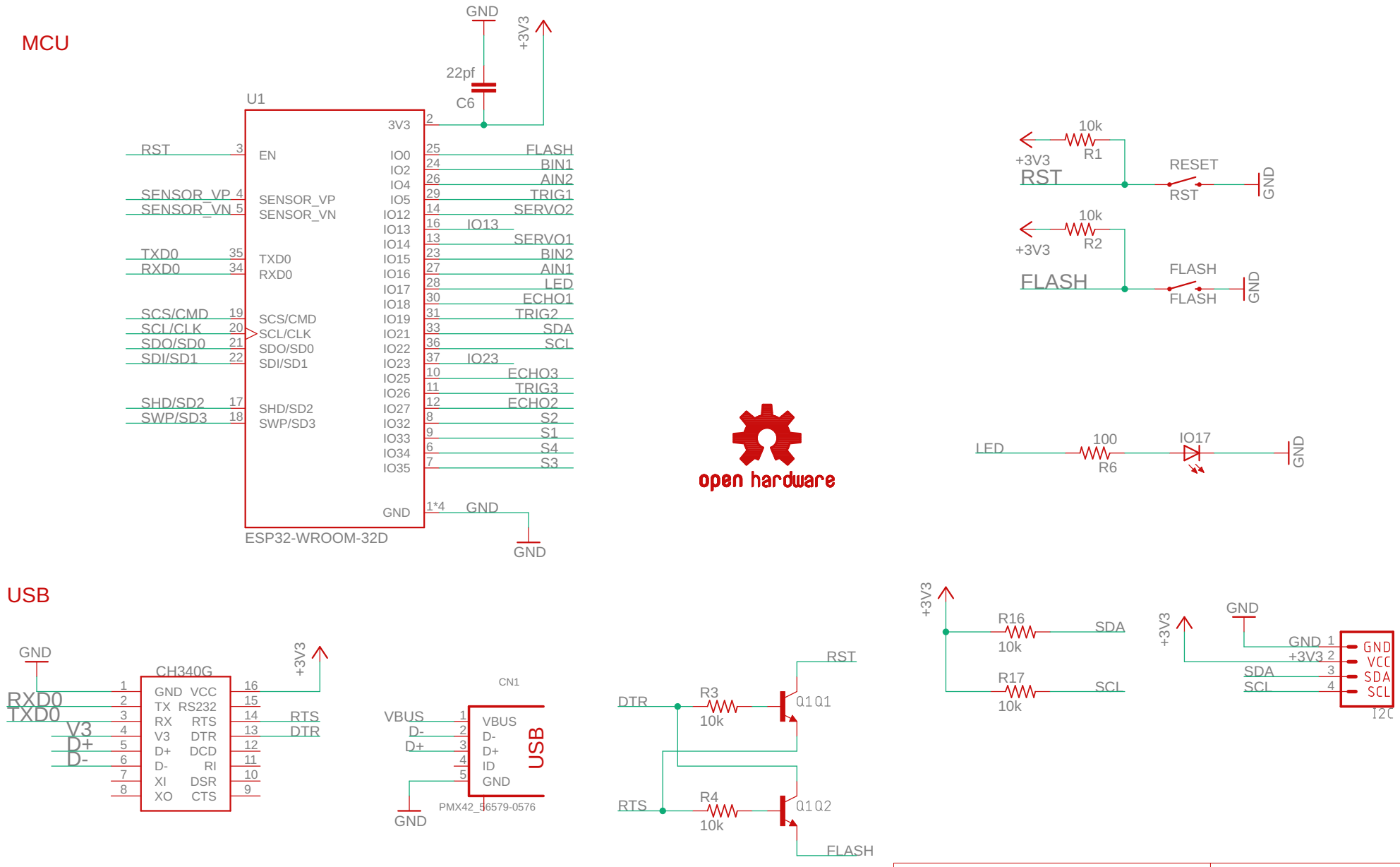
MCU
U1
ESP32-WROOM-32D
GND
+3V3
22pf
C6
RST
SENSOR_VP
SENSOR_VN
TXD0
RXD0
SCS/CMD
SCL/CLK
SDO/SD0
SDI/SD1
SHD/SD2
SWP/SD3
EN
3V3
IO0
IO2
IO4
IO5
IO12
IO13
IO14
IO15
IO16
IO17
IO18
IO19
IO21
IO22
IO23
IO25
IO26
IO27
IO32
IO33
IO34
IO35
FLASH
BIN1
AIN2
TRIG1
SERVO2
IO13
SERVO1
BIN2
AIN1
LED
ECHO1
TRIG2
SDA
SCL
IO23
ECHO3
TRIG3
ECHO2
S2
S1
S4
S3
1*4
10k
R1
RESET
R2
FLASH
open hardware
LED
100
R6
IO17
USB
CH340G
GND VCC
TX RS232
RX RTS
V3 DTR
D+ DCD
D- RI
XI DSR
XO CTS
RTS
DTR
CN1
VBUS
D-
D+
ID
GND
USB
PMX42_56579-0576
R3
R4
Q1Q1
Q1Q2
R16
R17
SDA
SCL
I2C
robot001
1/10/2020 3:57 PM
Sheet: 1/3

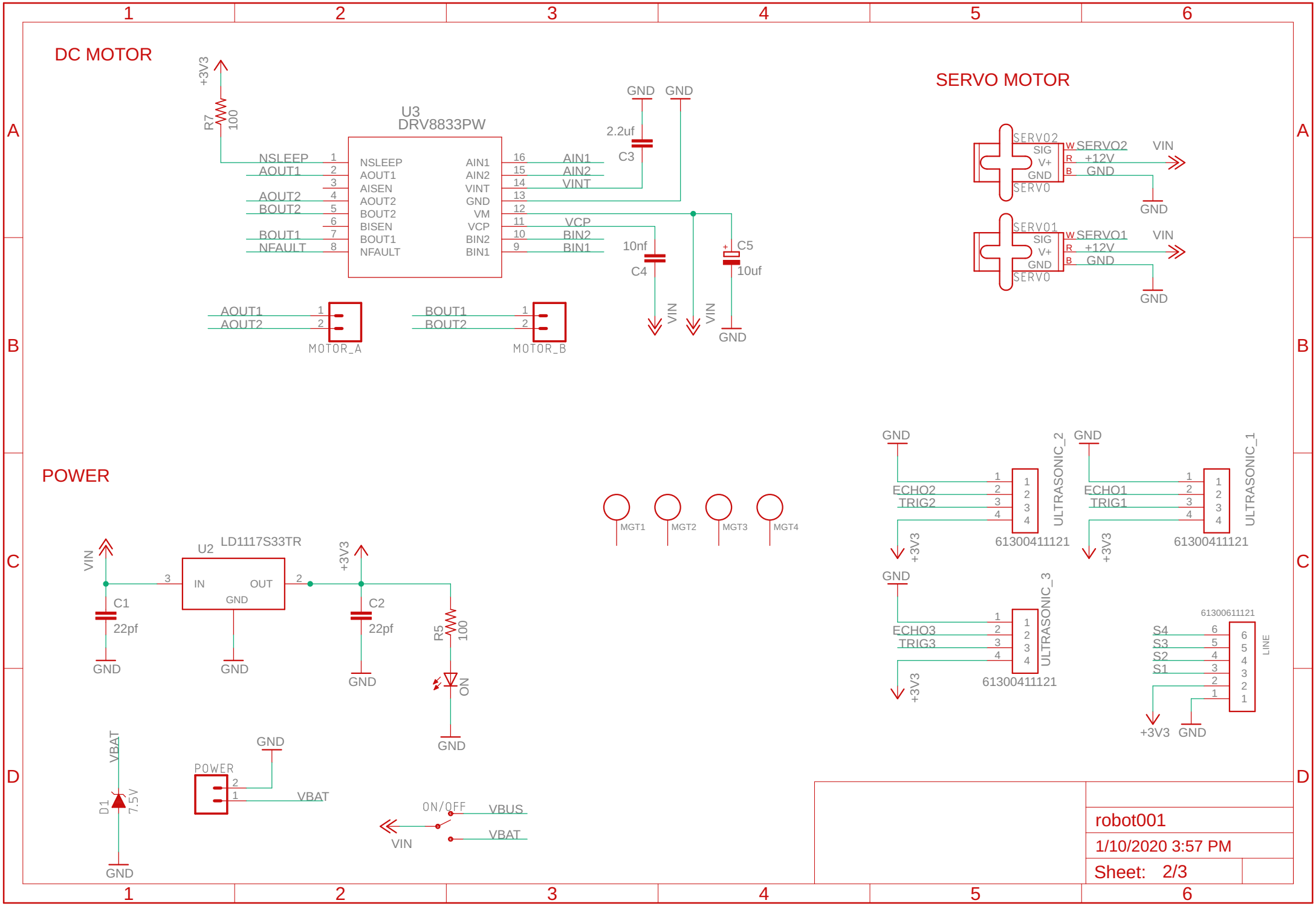
DC MOTOR
+3V3
R7
100
U3
DRV8833PW
NSLEEP
AOUT1
AOUT2
BOUT2
BOUT1
NFAULT
AISEN
BISEN
AIN1
AIN2
VINT
VM
VCP
BIN2
BIN1
GND
2.2uf
C3
10nf
C4
C5
10uf
VIN
MOTOR_A
MOTOR_B
SERVO MOTOR
SERVO2
SERVO1
SIG
V+
SERVO
+12V
POWER
VIN
U2
LD1117S33TR
IN
OUT
C1
22pf
C2
R5
ON
VBAT
D1
7.5V
POWER
ON/OFF
VBUS
MGT1
MGT2
MGT3
MGT4
ULTRASONIC_2
ULTRASONIC_1
ULTRASONIC_3
ECHO2
TRIG2
ECHO1
TRIG1
ECHO3
TRIG3
61300411121
61300611121
LINE
S4
S3
S2
S1
robot001
1/10/2020 3:57 PM
Sheet: 2/3

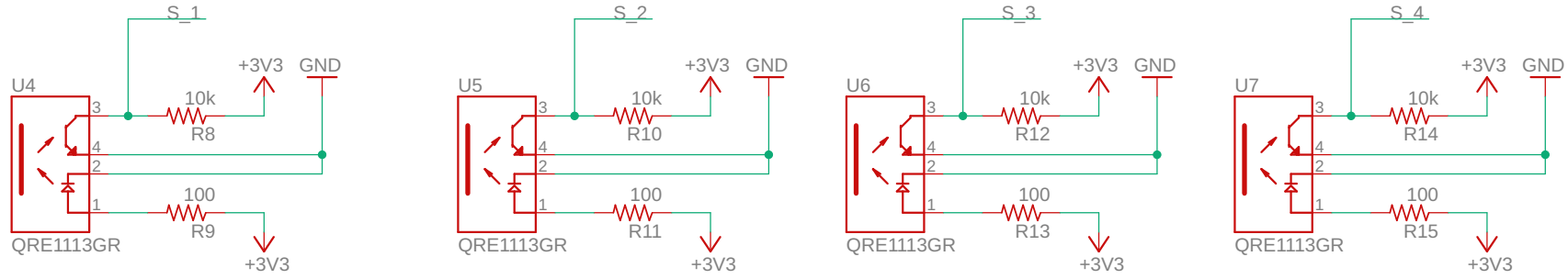

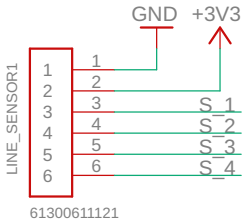

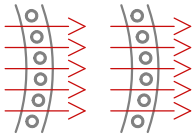

robot001

1/10/2020 3:57 PM

Sheet: 3/3