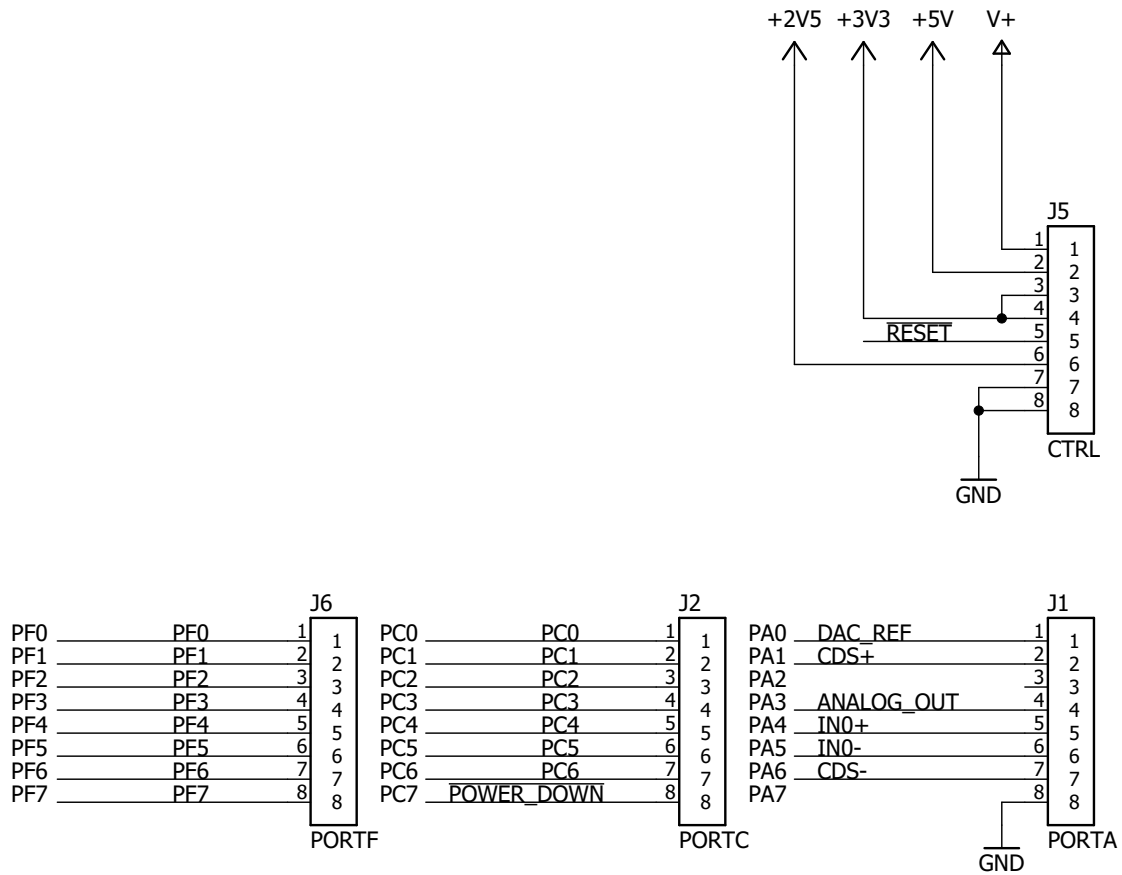

out of the BOX

1/3	
3744_analog_backpack v1.3	
Connectors	
Tim Martin	1.2

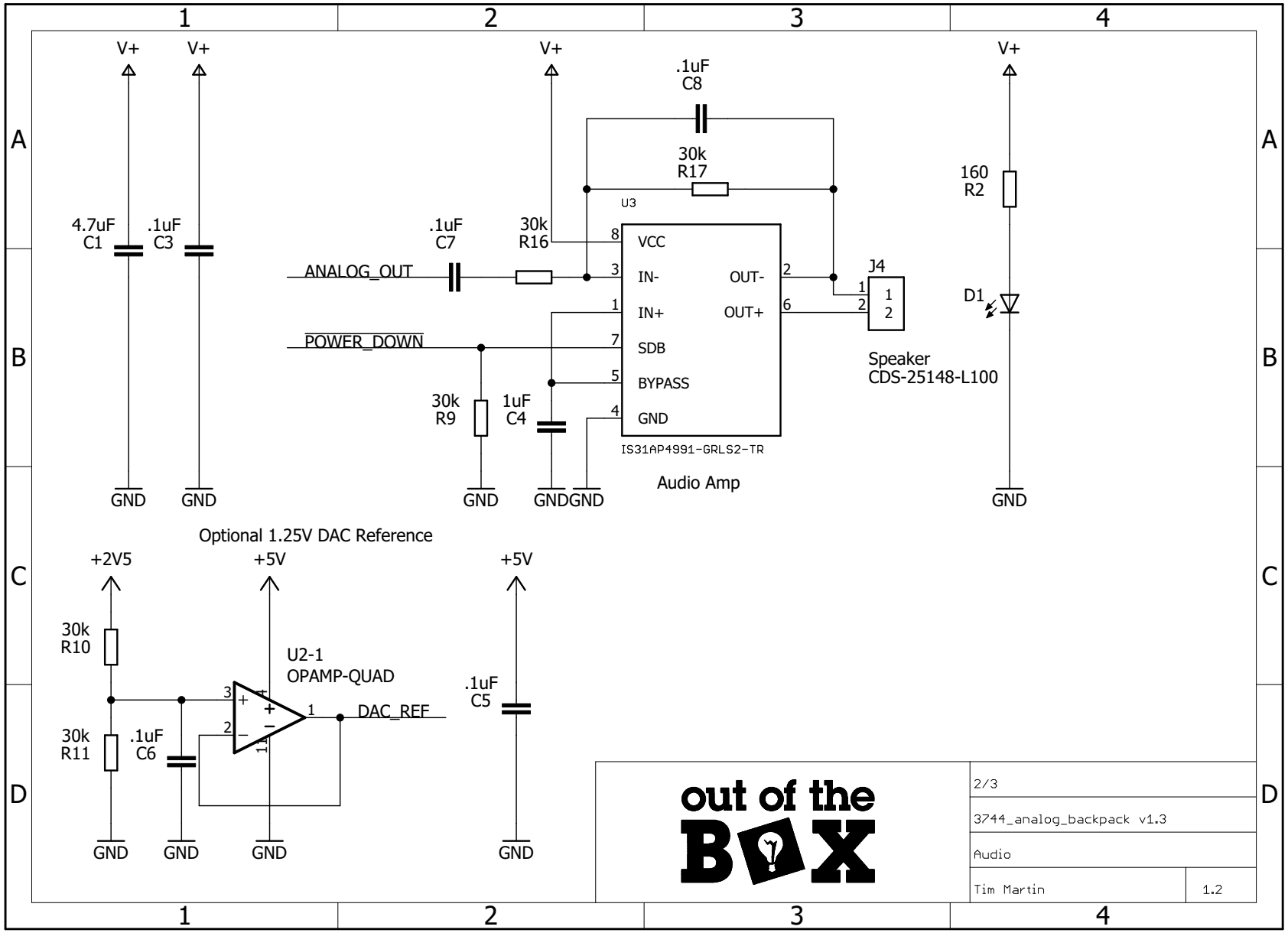
V+
V+
V+
V+
.1uF
C8
30k
R17
U3
160
R2
4.7uF
C1
.1uF
C3
.1uF
C7
30k
R16
ANALOG_OUT
VCC
IN-
IN+
SDB
BYPASS
GND
OUT-
OUT+
J4
D1
POWER_DOWN
Speaker
CDS-25148-L100
30k
R9
1uF
C4
IS31AP4991-GRLS2-TR
Audio Amp
GND
GND
GND
GND
GND
GND
Optional 1.25V DAC Reference
+2V5
+5V
+5V
30k
R10
U2-1
OPAMP-QUAD
.1uF
C5
DAC_REF
30k
R11
.1uF
C6
GND
GND
GND
GND
out of the
BOX
2/3
3744_analog_backpack v1.3
Audio
Tim Martin
1.2

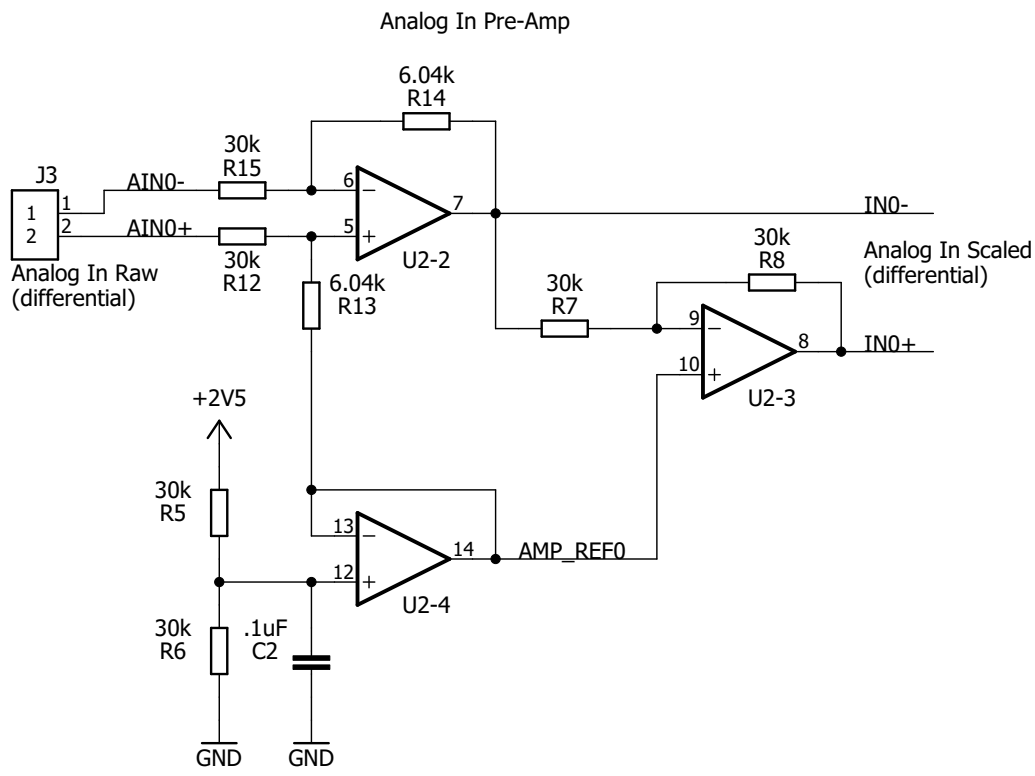

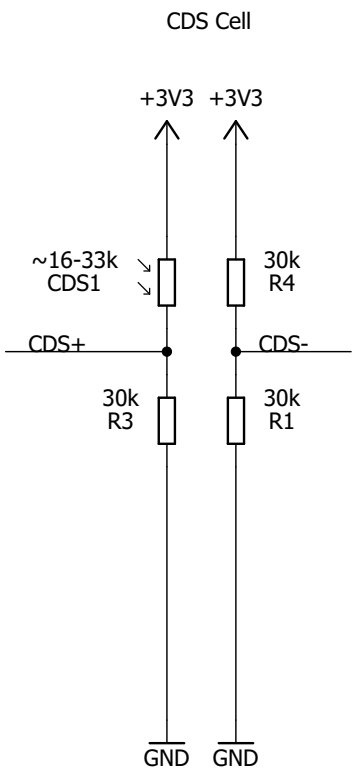

out of the BOX

3/3	
3744_analog_backpack v1.3	
Analog In	
Tim Martin	1.2