PROCESS AND RESEARCH

This is my Mechatronics Engineering senior capstone project. It is still in progress, currently on month 4 of 7. The team consists of me (Mechanical Engineer, Project Manager, Visual Designer) and 4 others. We are working with a scientist and farmer, Dr. Wenhao Sun, who runs a Sea Asparagus farm in Hawaii called Olakai. Follow our progress on our website here.

3 **BRAINSTORMING & SKETCHING:** There are two big challenges. One: we **cannot cut or bruise** the Sea Asparagus. Two: we **do not have any Sea Asparagus to test with** where we live (Toronto, Canada). A large part of the initial design is **guessing until we get to Hawaii for testing.**

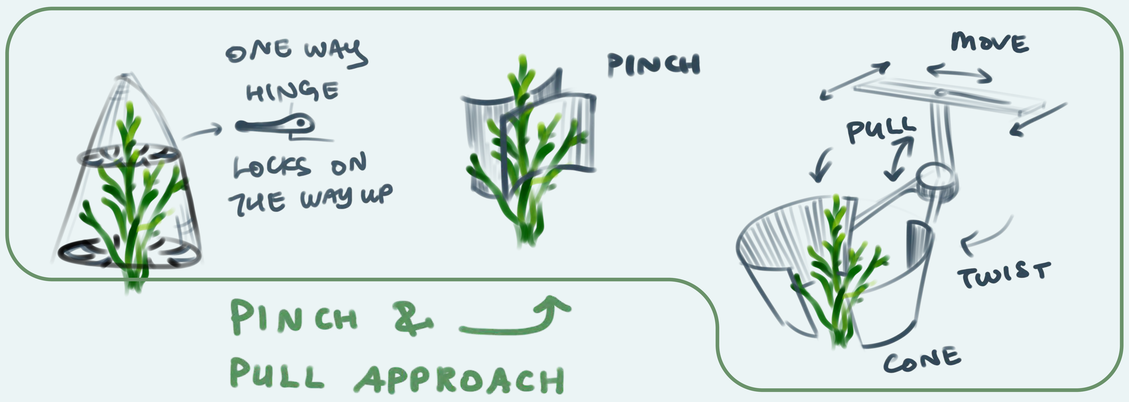

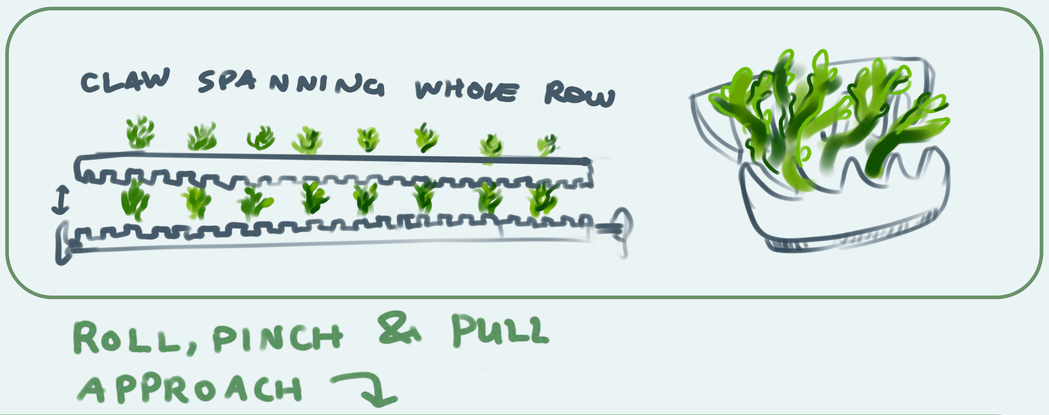

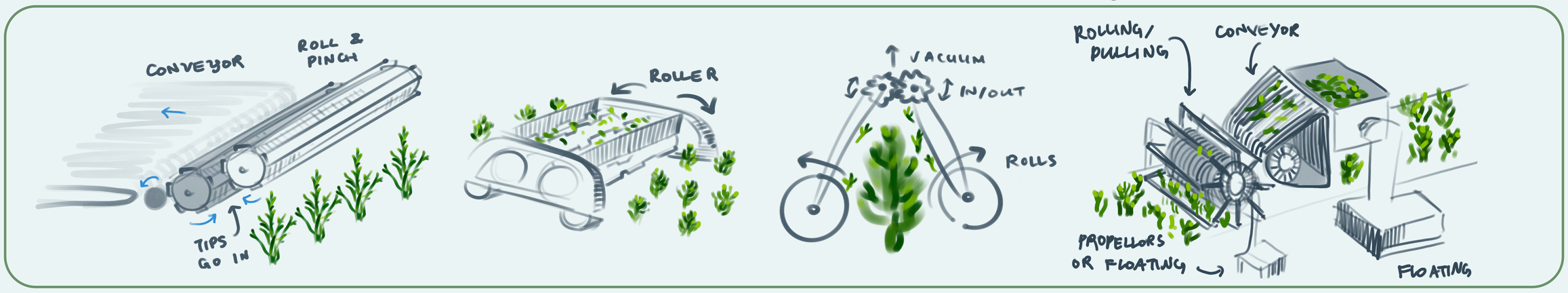

4 **CAD OF THE TOP OPTIONS**

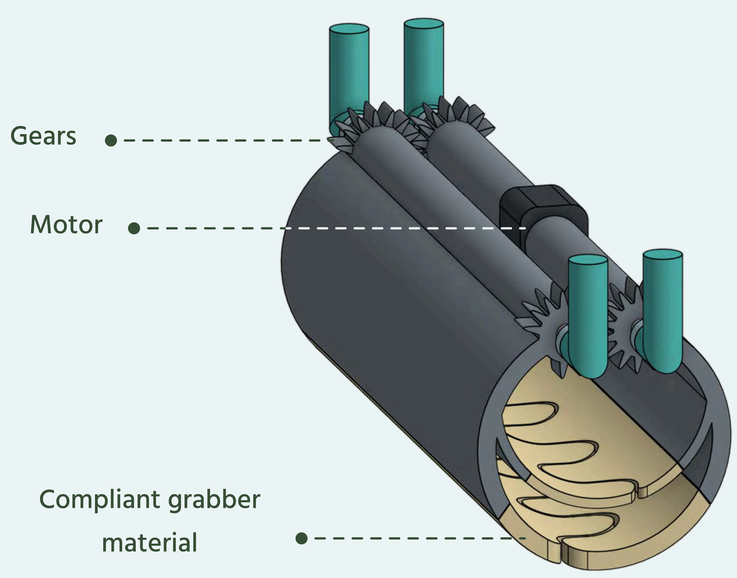

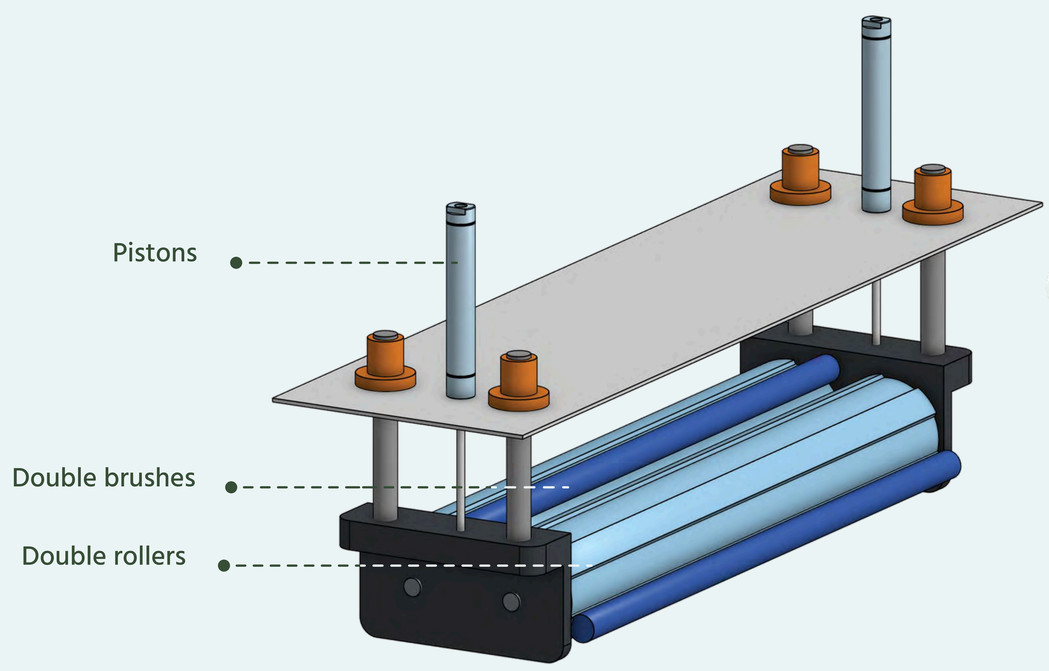

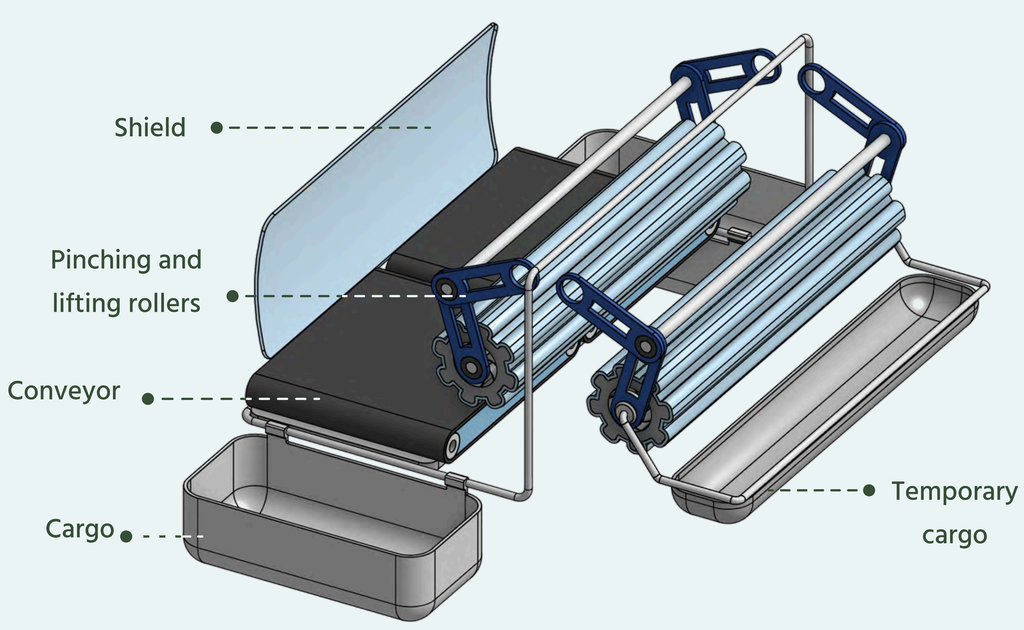

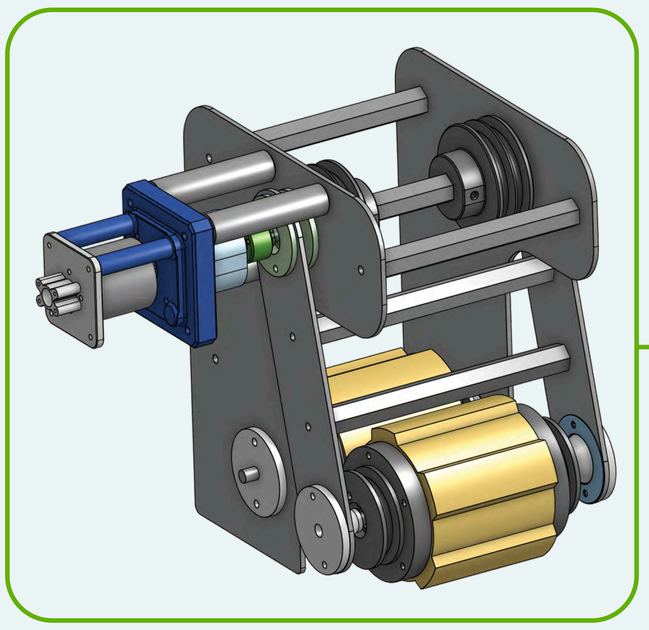

TO BUILD