5 **PROTOTYPING ROUND 1:** There are 4 main subsystems to consider: picking, transporting harvested tips, cargo, and traversal. Our design has to be a sprint. So for our first prototype, **we zoom in on just the picker mechanism and make a small scale version** to validate the roller design for our first trip to Hawaii.

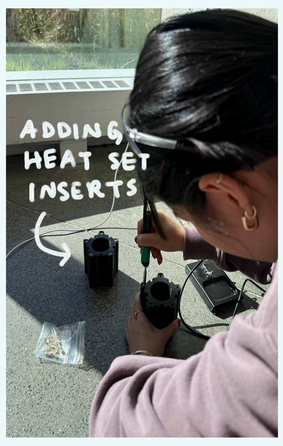

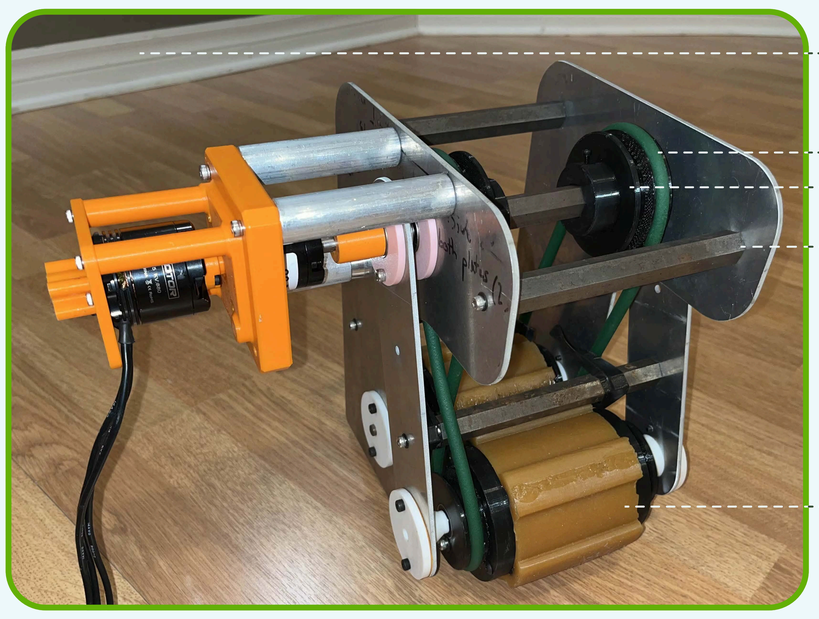

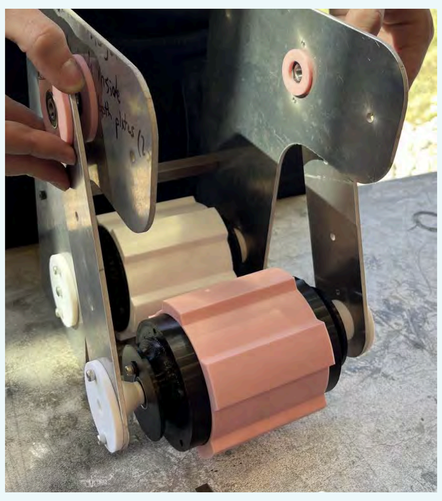

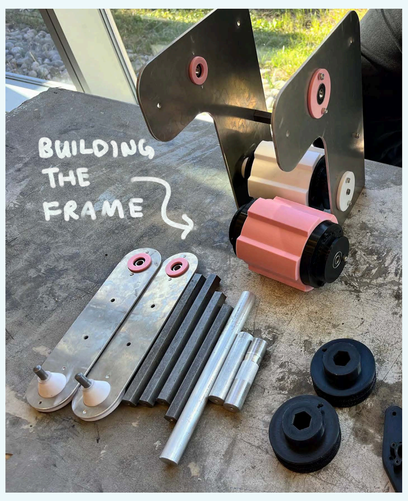

TESTING

6 **TESTING ROUND 1:** The **first trip to the farm** for testing **prioritized characterization of the plant and its associated properties, and validating our roller design**. The team made a [list of design of experiments (DOEs)] to complete.

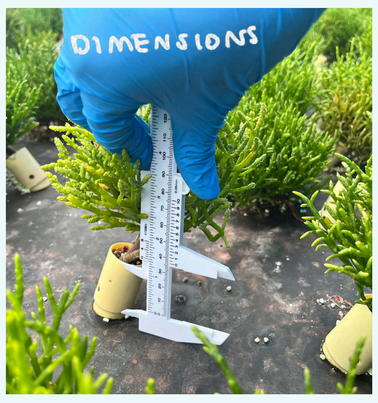

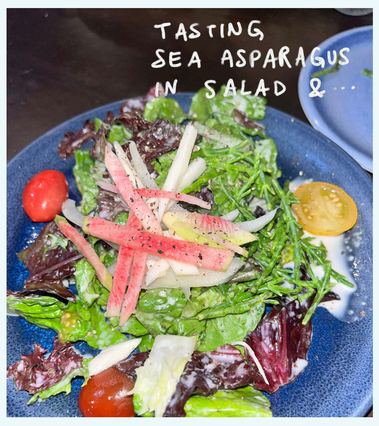

VIDEO STILLS: [Click here to find a video] **of our roller mechanism picking the plant**, and a drone shot of us in the farm.

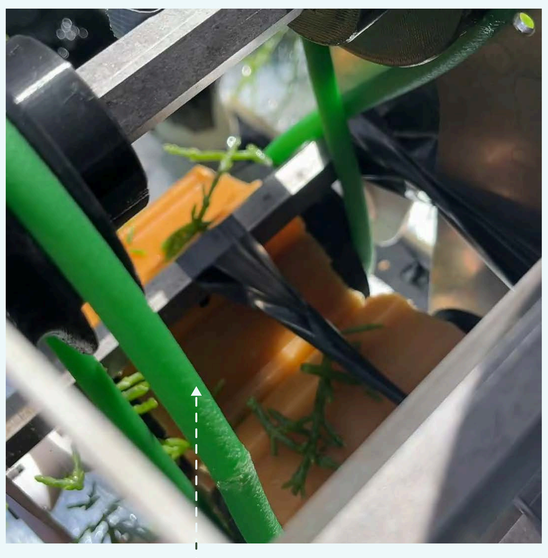

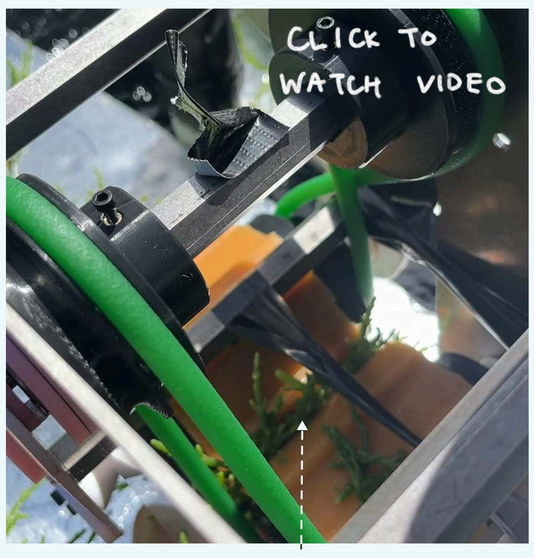

Tips harvested by the urethane roller prototype!

In the ponds, learning, testing, and harvesting

FINAL DESIGN

7 **HARVESTING PROCEDURE:**
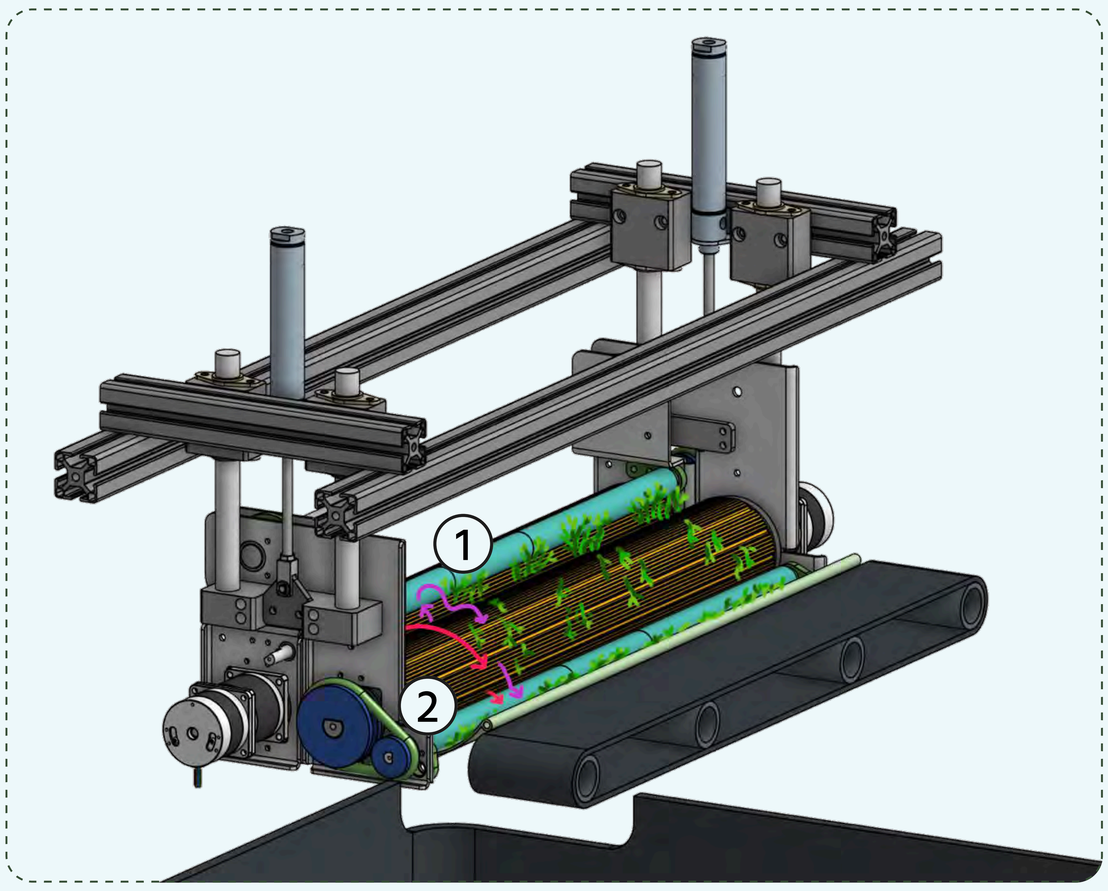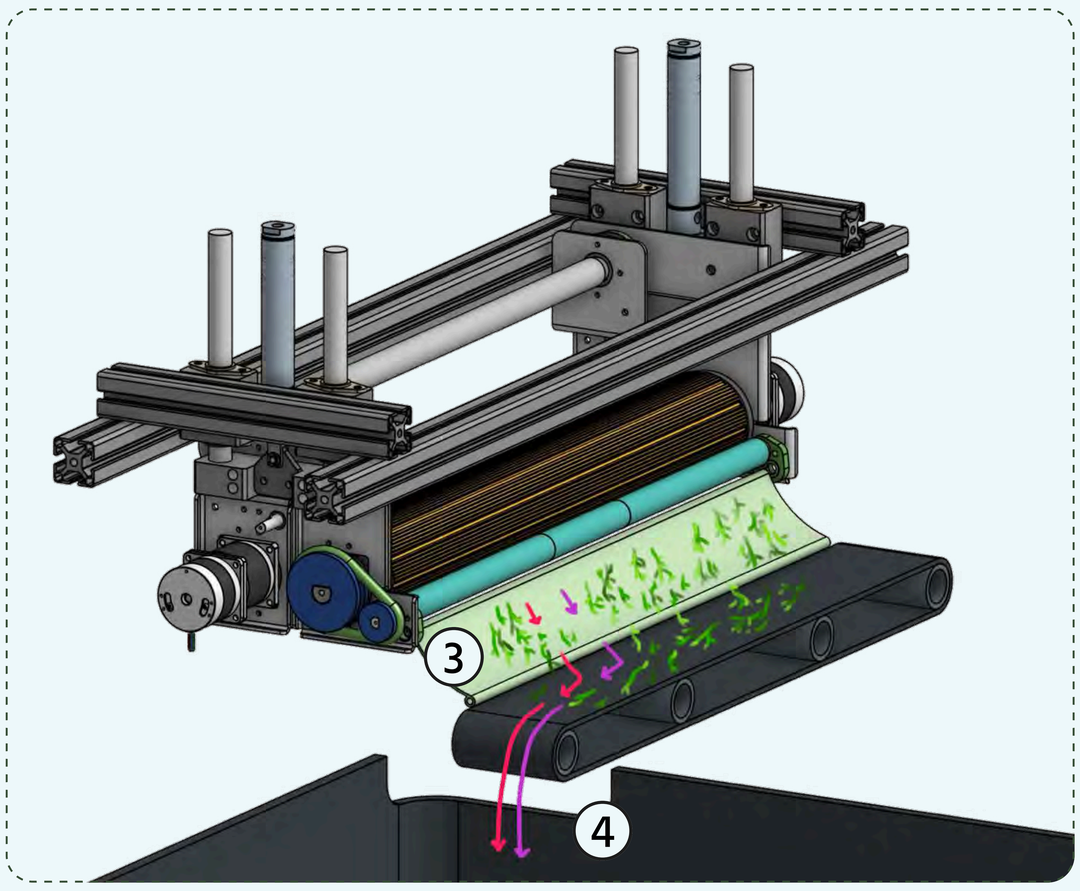
1. Rollers lower while spinning to **pick the ripe parts of the plant. There are two paths the tips can take: purple and red.** The brushes ensure that either way, the tips end up on the front roller and eventually the ramp.
2. Picked **tips are gathered on the ramp** as a cup.
3. The rollers slowly lift and the harvested tips on the ramp start sliding down as the **ramp slopes toward the conveyor**.
4. The harvested tips on the **conveyor belt leads to the floating cargo bin.**