SONY

GVIF3 Deserializer

Preliminary

CXD4984ER-W

Description

The CXD4984ER-W is a GVIF3 (Gigabit Video InterFace 3) deserializer IC. It is suitable for automotive camera system and automotive AV interface applications. It supports RAW 8 / 10 / 12 / 16 / 20 bits data or YCbCr (YUV) 8 bits data transmission or RGB 24 bits data transmission up to 9.6 Gbps video rate, and it includes Aux interface (I^2C) and GPIO interface.

(Applications: Automotive Camera System / Automotive Entertainment / Infotainment)

Features

- ◆GVIF3 (Gigabit Video InterFace 3) deserializer which has 4 serial inputs
- ◆Up to 9.6 Gbps video rate
- ◆Output format: RAW 8 / 10 / 12 / 16 / 20 bits or YCbCr422 (YUV422) 8 bits or RGB 24 bits
- ◆MIPI D-PHY / C-PHY CSI-2 Interface (2 Port)
- ◆Aux interface (I^2C) (2 Port)
- ◆GPIO interface
- ◆Sync signal transmission to image sensor
- ◆Merge function of multiple videos
- ◆Support for shielded twisted-pair and coaxial cables
- ◆Support for power over serial cable operation
- ◆＋1.1 V / 1.8 V / 1.8 V or 3.3 V Power Supply
- ◆VQFN 64 pins package (9 mm × 9 mm)
- ◆Functional Safety
- ◆Automotive qualified part

For Desay

Contents

Description---------- 1
Features---------- 1
Absolute Maximum Ratings ---------- 15
Recommended Operating Conditions ---------- 15
Pin Description ---------- 16
Equivalent Circuit ---------- 19
Pin Configuration---------- 20
Block Diagram ---------- 21
Electrical Characteristics---------- 22
DC Characteristics (Under the recommended conditions) ---------- 22
AC Characteristics (Under the recommended conditions) ---------- 24
Timing Chart ---------- 29
Power Supply Voltage Power-on / off Sequence and Chip Enable Setup---------- 31
Power-on Sequence Restriction ---------- 31
Other Sequence Restriction---------- 32
Description of Functions and Operation 1 ---------- 34
Overview ---------- 34
Video Transmission ---------- 35
Video Stream Multiplexing---------- 35
Video Stream Demultiplexing ---------- 35
Slot ---------- 35
Aux Port ---------- 35
I^2C Interface ---------- 36
GPIO Port---------- 37
SYNC Port---------- 37
Register Access Interface---------- 37
Register Remote Access Function ---------- 38
I2CADR Pin Setup---------- 38
GVIFID Pin Setup---------- 39
CMOS Logic Interface ---------- 40
INTERRUPT Signal and Register ---------- 40
Description of Functions and Operation 2 (CXD4984ER-W) ---------- 41
Video Port---------- 41
MIPI D-PHY CSI-2 Interface ---------- 41
MIPI D-PHY Global Operation Timing Parameter Setup---------- 44
MIPI C-PHY CSI-2 Interface ---------- 46
MIPI C-PHY Global Operation Timing Parameter Setup---------- 49
Initial Setup Sequence---------- 51

For Desay

Video Transmission ---- 52
MIPITX VCID SELECT Function ---- 52
MIPITX VCID OVERRIDE Function ---- 53
MIPITX VCID SELECT & OVERRIDE Function ---- 53
MIPITX VCID SETUP Function ---- 53
MIPITX Extra Virtual Channel ID Override Mode ---- 54
MIPITX Clock Fixed Mode ---- 54
MIPITX Clock Regenerated Mode ---- 54
MIPITX Half Rate Mode ---- 54
Signal Assignment of Shared Pins ---- 55
System Clock Input ---- 59
Handling of Unused GVIF3 Port ---- 60
Frame Extended Mode ---- 61
List of Registers ---- 62
Detailed Description of Registers ---- 74
General Status Monitor - 1 : General status monitor 1 (bank0,0x00,R) ---- 75
General Status Monitor - 2 : General status monitor 2 (bank0,0x01,R) ---- 76
General Status Monitor - 3 : General status monitor 3 (bank0,0x02,R) ---- 77
General Status Monitor - 5 : General status monitor 5 (bank0,0x03,R) ---- 78
General Status Monitor - 4 : General status monitor 4 (bank0,0x04,R) ---- 79
Error Status Monitor - 5 : Error status monitor 5 (bank0,0x10,R) ---- 80
Error Status Monitor - 1 : Error status monitor 1 (bank0,0x11,R) ---- 81
Error Status Monitor - 2 : Error status monitor 2 (bank0,0x12,R) ---- 82
Error Status Monitor - 8 : Error status monitor 8 (bank0,0x13,R) ---- 83
Error Status Monitor - 10 : Error status monitor 10 (bank0,0x14,R) ---- 84
Error Status Monitor - 6 : Error status monitor 6 (bank0,0x18,R) ---- 85
Error Status Monitor - 7 : Error status monitor 7 (bank0,0x1A,R) ---- 86
Error Status Monitor - 12 : Error status monitor 12 (bank0,0x1B,R) ---- 87
Error Status Monitor - 13 : Error status monitor 13 (bank0,0x1C,R) ---- 88
Interrupt Setup - 5 : Interrupt setup 5 (bank0,0x1E,RW) ---- 89
Interrupt Setup - 1 : Interrupt setup 1 (bank0,0x1F,RW) ---- 90
Interrupt Setup - 2 : Interrupt setup 2 (bank0,0x20,RW) ---- 91
Interrupt Setup - 8 : Interrupt setup 8 (bank0,0x21,RW) ---- 92
Interrupt Setup - 10 : Interrupt setup 10 (bank0,0x22,RW) ---- 93
Interrupt Setup - 6 : Interrupt setup 6 (bank0,0x26,RW) ---- 94
Interrupt Setup - 7 : Interrupt setup 7 (bank0,0x28,RW) ---- 95
Interrupt Setup - 12 : Interrupt setup 12 (bank0,0x29,RW) ---- 96
Interrupt Setup - 13 : Interrupt setup 13 (bank0,0x2A,RW) ---- 97
Error Status Setup : Error status setup (bank0,0x2E,RW) ---- 98

For Desay

Error Status Monitor - 14 : Error status monitor 14 (bank0,0x40,R) ---------- 99
Error Status Monitor - 17 : Error status monitor 17 (bank0,0x46,R) ---------- 100
Interrupt Setup - 14 : Interrupt setup 14 (bank0,0x4D,RW) ---------- 101
Interrupt Setup - 17 : Interrupt setup 17 (bank0,0x53,RW) ---------- 102
GVIF3 Transmitter 0 Setup - 1 : GVIF3 transmitter 0 setup 1 (bank0,0x60,RW) ---------- 103
GVIF3 Transmitter 0 Monitor - 1 : GVIF3 transmitter 0 monitor 1 (bank0,0x7C,R) ---------- 104
GVIF3 Transmitter 0 Setup - 6 : GVIF3 transmitter 0 setup 6 (bank0,0x7D,RW) ---------- 105
GVIF3 Transmitter 0 Monitor - 2 : GVIF3 transmitter 0 monitor 2 (bank0,0x7F,R) ---------- 106
GVIF3 Receiver 0 Setup - 1 : GVIF3 receiver 0 setup 1 (bank0,0x80,RW) ---------- 107
GVIF3 Receiver 0 Setup - 2 : GVIF3 receiver 0 setup 2 (bank0,0x83,RW) ---------- 108
GVIF3 Receiver 0 Setup - 6 : GVIF3 receiver 0 setup 6 (bank0,0x86,RW) ---------- 109
GVIF3 Receiver 0 Monitor - 1 : GVIF3 receiver 0 monitor 1 (bank0,0x88,R) ---------- 110
GVIF3 Receiver 0 Monitor - 2 : GVIF3 receiver 0 monitor 2 (bank0,0x8A,R) ---------- 111
GVIF3 Transmitter 0 Setup - 2 : GVIF3 transmitter 0 setup 2 (bank0,0x8E,RW) ---------- 112
GVIF3 Receiver 0 Setup - 4 : GVIF3 receiver 0 setup 4 (bank0,0x90,RW) ---------- 113
GVIF3 Receiver 1 Setup - 4 : GVIF3 receiver 1 setup 4 (bank0,0x91,RW) ---------- 114
Shared Pin Setup - 1 : Shared pin setup 1 (bank0,0x97,RW) ---------- 115
Shared Pin Setup - 2 : Shared pin setup 2 (bank0,0x98,RW) ---------- 116
Unloader Common Setup - 3 : Unloader common setup 3 (bank0,0x9A,RW) ---------- 117
Unloader Common Setup - 1 : Unloader common setup 1 (bank0,0x9B,RW) ---------- 118
Unloader Common Setup - 2 : Unloader common setup 2 (bank0,0x9C,RW) ---------- 119
GVIF3 Receiver 0 Setup - 7 : GVIF3 receiver 0 setup 7 (bank0,0x9D,RW) ---------- 120
Unloader 0 Setup - 1 : Unloader 0 setup 1 (bank0,0x9E,RW) ---------- 121
Unloader 0 Setup - 2 : Unloader 0 setup 2 (bank0,0x9F,RW) ---------- 122
Unloader 0 Monitor - 1 : Unloader 0 monitor 1 (bank0,0xA0,R) ---------- 123
Unloader 0 Setup - 3 : Unloader 0 setup 3 (bank0,0xA2,RW) ---------- 124
Unloader 0 Setup - 4 : Unloader 0 setup 4 (bank0,0xA4,RW) ---------- 125
Unloader 1 Setup - 1 : Unloader 1 setup 1 (bank0,0xA7,RW) ---------- 126
Unloader 1 Setup - 2 : Unloader 1 setup 2 (bank0,0xA8,RW) ---------- 127
Unloader 1 Monitor - 1 : Unloader 1 monitor 1 (bank0,0xA9,R) ---------- 128
Unloader 1 Setup - 3 : Unloader 1 setup 3 (bank0,0xAB,RW) ---------- 129
Unloader 1 Setup - 4 : Unloader 1 setup 4 (bank0,0xAD,RW) ---------- 130
Daisy Chain Setup - 1 : Daisy chain setup 1 (bank0,0xD6,RW) ---------- 131
Register Remote Access Setup - 1 : Register remote access setup 1 (bank0,0xDF,RW) ---------- 132
Register Remote Access Setup - 2 : Register remote access setup 2 (bank0,0xE0,RW) ---------- 133
Register Remote Access Setup - 3 : Register remote access setup 3 (bank0,0xE1,RW) ---------- 134
Register Remote Access Monitor - 1 : Register remote access monitor 1 (bank0,0xE2,R) ---------- 135
Register Remote Access Setup - 4 : Register remote access setup 4 (bank0,0xE3,RW) ---------- 136
Register Remote Access Monitor - 2 : Register remote access monitor 2 (bank0,0xE4,R) ---------- 137

For Desay

Register Remote Access Setup - 5 : Register remote access setup 5 (bank0,0xE8,RW) ---------- 139
GPIO Setup - 1 : GPIO setup 1 (bank0,0xEC,RW) ---------- 140
GPIO Monitor - 1 : GPIO monitor 1 (bank0,0xED,R) ---------- 141
GPIO Setup - 4 : GPIO setup 4 (bank0,0xEE,RW) ---------- 142
GPIO Setup - 2 : GPIO setup 2 (bank0,0xEF,RW) ---------- 143
GPIO Setup - 3 : GPIO setup 3 (bank0,0xF0,RW) ---------- 144
REG_GPIO Setup - 1 : REG_GPIO setup 1 (bank0,0xF1,RW) ---------- 145
REG_GPIO Setup - 2 : REG_GPIO setup 2 (bank0,0xF2,RW) ---------- 146
REG_GPIO Monitor - 1 : REG_GPIO monitor 1 (bank0,0xF3,R) ---------- 147
Aux0 Setup - 1 : Aux0 setup 1 (bank0,0xF5,RW) ---------- 148
Aux0 Setup - 6 : Aux0 setup 6 (bank0,0xF6,RW) ---------- 149
Aux0 Setup - 2 : Aux0 setup 2 (bank0,0xF7,RW) ---------- 150
Aux0 Setup - 3 : Aux0 setup 3 (bank0,0xFA,RW) ---------- 151
Aux0 Setup - 5 : Aux0 setup 5 (bank0,0xFE,RW) ---------- 152
Failure Diagnosis Monitor - 2 : Failure Diagnosis Monitor 2 (bank1,0x1E,R) ---------- 153
SYNC Setup - 2 : SYNC setup 2 (bank1,0x2F,RW) ---------- 154
SYNC Setup - 3 : SYNC setup 3 (bank1,0x30,RW) ---------- 155
SYNC Setup - 5 : SYNC setup 5 (bank1,0x36,RW) ---------- 156
MIPI Transmitter 0_0 Setup - 1 : MIPI transmitter 0_0 setup 1 (bank1,0x4D,RW) ---------- 157
MIPI Transmitter 0_0 Setup - 2 : MIPI transmitter 0_0 setup 2 (bank1,0x4E,RW) ---------- 158
MIPI Transmitter 0_0 Setup - 3 : MIPI transmitter 0_0 setup 3 (bank1,0x4F,RW) ---------- 159
MIPI Transmitter 0_0 Setup - 4 : MIPI transmitter 0_0 setup 4 (bank1,0x50,RW) ---------- 160
MIPI Transmitter 0_0 Setup - 5 : MIPI transmitter 0_0 setup 5 (bank1,0x51,RW) ---------- 161
MIPI Transmitter 0_0 Setup - 6 : MIPI transmitter 0_0 setup 6 (bank1,0x52,RW) ---------- 162
MIPI Transmitter 0_0 Setup - 7 : MIPI transmitter 0_0 setup 7 (bank1,0x53,RW) ---------- 163
MIPI Transmitter 0_0 Setup - 8 : MIPI transmitter 0_0 setup 8 (bank1,0x54,RW) ---------- 164
MIPI Transmitter 0_0 Setup - 9 : MIPI transmitter 0_0 setup 9 (bank1,0x55,RW) ---------- 165
MIPI Transmitter 0_0 Setup - 10 : MIPI transmitter 0_0 setup 10 (bank1,0x56,RW) ---------- 166
MIPI Transmitter 0_0 Setup - 11 : MIPI transmitter 0_0 setup 11 (bank1,0x57,RW) ---------- 167
MIPI Transmitter 0_0 Setup - 12 : MIPI transmitter 0_0 setup 12 (bank1,0x58,RW) ---------- 168
MIPI Transmitter 0_0 Setup - 14 : MIPI transmitter 0_0 setup 14 (bank1,0x5A,RW) ---------- 169
MIPI Transmitter 0_0 Setup - 16 : MIPI transmitter 0_0 setup 16 (bank1,0x5D,RW) ---------- 170
PLL0 Setup - 6 : PLL0 setup 6 (bank1,0x5F,RW) ---------- 171
PLL0 Setup - 7 : PLL0 setup 7 (bank1,0x60,RW) ---------- 172
PLL0 Setup - 1 : PLL0 setup 1 (bank1,0x61,RW) ---------- 173
PLL0 Setup - 2 : PLL0 setup 2 (bank1,0x62,RW) ---------- 175
PLL0 Setup - 5 : PLL0 setup 5 (bank1,0x63,RW) ---------- 176
PLL0 Setup - 3 : PLL0 setup 3 (bank1,0x65,RW) ---------- 177
PLL0 Setup - 4 : PLL0 setup 4 (bank1,0x66,RW) ---------- 178

For Desay

SSCG0 Setup - 1 : SSCG0 setup 1 (bank1,0x68,RW)----------179
SSCG0 Setup - 2 : SSCG0 setup 2 (bank1,0x69,RW)----------180
SSCG0 Setup - 3 : SSCG0 setup 3 (bank1,0x6A,RW) ----------181
SSCG0 Setup - 4 : SSCG0 setup 4 (bank1,0x6B,RW) ----------182
Daisy Chain Setup - 2 : Daisy chain setup 2 (bank1,0x79,RW) ----------183
GVIF3 Receiver 0 Setup - 3 : GVIF3 receiver 0 setup 3 (bank1,0x81,RW)----------184
GVIF3 receiver 0 Setup - 9 : GVIF3 receiver 0 setup 9 (bank1,0x86,RW)----------185
GVIF3 receiver 0 Setup - 8 : GVIF3 receiver 0 setup 8 (bank2,0x00,RW)----------186
GVIF3 receiver 1 Setup - 8 : GVIF3 receiver 1 setup 8 (bank2,0x01,RW)----------187
GVIF3 receiver 2 Setup - 8 : GVIF3 receiver 2 setup 8 (bank2,0x02,RW)----------188
GVIF3 receiver 3 Setup - 8 : GVIF3 receiver 3 setup 8 (bank2,0x03,RW)----------189
MIPI Transmitter 0_0 Setup - 21 : MIPI transmitter 0_0 setup 21 (bank2,0x05,RW)----------190
MIPI Transmitter 0_1 Setup - 21 : MIPI transmitter 0_1 setup 21 (bank2,0x06,RW)----------191
MIPI Transmitter 1_2 Setup - 21 : MIPI transmitter 1_2 setup 21 (bank2,0x07,RW)----------192
MIPI Transmitter 1_3 Setup - 21 : MIPI transmitter 1_3 setup 21 (bank2,0x08,RW)----------193
MIPI Transmitter 0_1 Setup - 1 : MIPI transmitter 0_1 setup 1 (bank2,0x4D,RW)----------194
MIPI Transmitter 0_1 Setup - 2 : MIPI transmitter 0_1 setup 2 (bank2,0x4E,RW)----------195
MIPI Transmitter 0_1 Setup - 3 : MIPI transmitter 0_1 setup 3 (bank2,0x4F,RW) ----------196
MIPI Transmitter 0_1 Setup - 4 : MIPI transmitter 0_1 setup 4 (bank2,0x50,RW) ----------197
MIPI Transmitter 0_1 Setup - 5 : MIPI transmitter 0_1 setup 5 (bank2,0x51,RW) ----------198
MIPI Transmitter 0_1 Setup - 6 : MIPI transmitter 0_1 setup 6 (bank2,0x52,RW) ----------199
MIPI Transmitter 0_1 Setup - 7 : MIPI transmitter 0_1 setup 7 (bank2,0x53,RW) ----------200
MIPI Transmitter 0_1 Setup - 8 : MIPI transmitter 0_1 setup 8 (bank2,0x54,RW) ----------201
MIPI Transmitter 0_1 Setup - 9 : MIPI transmitter 0_1 setup 9 (bank2,0x55,RW) ----------202
MIPI Transmitter 0_1 Setup - 10 : MIPI transmitter 0_1 setup 10 (bank2,0x56,RW)----------203
MIPI Transmitter 0_1 Setup - 11 : MIPI transmitter 0_1 setup 11 (bank2,0x57,RW) ----------204
MIPI Transmitter 0_1 Setup - 12 : MIPI transmitter 0_1 setup 12 (bank2,0x58,RW)----------205
MIPI Transmitter 0_1 Setup - 14 : MIPI transmitter 0_1 setup 14 (bank2,0x5A,RW)----------206
MIPI Transmitter 0_1 Setup - 16 : MIPI transmitter 0_1 setup 16 (bank2,0x5D,RW) ----------207
GVIF3 Receiver 1 Setup - 1 : GVIF3 receiver 1 setup 1 (bank2,0x80,RW)----------208
GVIF3 Receiver 1 Setup - 5 : GVIF3 receiver 1 setup 5 (bank2,0x81,RW)----------209
GVIF3 Receiver 1 Setup - 2 : GVIF3 receiver 1 setup 2 (bank2,0x83,RW)----------210
GVIF3 Receiver 1 Setup - 6 : GVIF3 receiver 1 setup 6 (bank2,0x86,RW)----------211
GVIF3 Receiver 1 Monitor - 1 : GVIF3 receiver 1 monitor 1 (bank2,0x88,R)----------212
GVIF3 Receiver 1 Monitor - 2 : GVIF3 receiver 1 monitor 2 (bank2,0x8A,R) ----------213
MIPI Transmitter 0_0 Setup - 17 : MIPI transmitter 0_0 setup 17 (bank2,0x95,RW)----------214
MIPI Transmitter 0_0 Setup - 18 : MIPI transmitter 0_0 setup 18 (bank2,0x96,RW)----------215
MIPI Transmitter 0_0 Setup - 19 : MIPI transmitter 0_0 setup 19 (bank2,0x97,RW)----------216
MIPI Transmitter 0_0 Setup - 20 : MIPI transmitter 0_0 setup 20 (bank2,0x98,RW)----------217

For Desay

MIPI Transmitter 0_1 Setup - 17 : MIPI transmitter 0_1 setup 17 (bank2,0x99,RW) ----------218
MIPI Transmitter 0_1 Setup - 18 : MIPI transmitter 0_1 setup 18 (bank2,0x9A,RW)----------219
MIPI Transmitter 0_1 Setup - 19 : MIPI transmitter 0_1 setup 19 (bank2,0x9B,RW)----------220
MIPI Transmitter 0_1 Setup - 20 : MIPI transmitter 0_1 setup 20 (bank2,0x9C,RW) ----------221
GVIF3 Receiver 1 Setup - 7 : GVIF3 receiver 1 setup 7 (bank2,0x9D,RW) ----------222
Unloader 2 Setup - 1 : Unloader 2 setup 1 (bank2,0x9E,RW) ----------223
Unloader 2 Setup - 2 : Unloader 2 setup 2 (bank2,0x9F,RW)----------224
Unloader 2 Monitor - 1 : Unloader 2 monitor 1 (bank2,0xA0,R) ----------225
Unloader 2 Setup - 3 : Unloader 2 setup 3 (bank2,0xA2,RW) ----------226
Unloader 2 Setup - 4 : Unloader 2 setup 4 (bank2,0xA4,RW) ----------227
Unloader 3 Setup - 1 : Unloader 3 setup 1 (bank2,0xA7,RW) ----------228
Unloader 3 Setup - 2 : Unloader 3 setup 2 (bank2,0xA8,RW) ----------229
Unloader 3 Monitor - 1 : Unloader 3 monitor 1 (bank2,0xA9,R) ----------230
Unloader 3 Setup - 3 : Unloader 3 setup 3 (bank2,0xAB,RW) ----------231
Unloader 3 Setup - 4 : Unloader 3 setup 4 (bank2,0xAD,RW)----------232
GVIF3 Receiver 1 Setup - 3 : GVIF3 receiver 1 setup 3 (bank2,0xE4,RW) ----------233
GVIF3 receiver 1 Setup - 9 : GVIF3 receiver 1 setup 9 (bank2,0xE9,RW) ----------234
Failure Diagnosis Monitor - 4 : Failure Diagnosis Monitor 4 (bank2,0xFA,R) ----------235
Failure Diagnosis Monitor - 5 : Failure Diagnosis Monitor 5 (bank2,0xFB,R) ----------236
Failure Diagnosis Monitor - 6 : Failure Diagnosis Monitor 6 (bank2,0xFD,R) ----------237
Failure Diagnosis Monitor - 7 : Failure Diagnosis Monitor 7 (bank2,0xFE,R) ----------238
SSCG1 Setup - 1 : SSCG1 setup 1 (bank3,0x00,RW)----------239
SSCG1 Setup - 2 : SSCG1 setup 2 (bank3,0x01,RW)----------240
SSCG1 Setup - 3 : SSCG1 setup 3 (bank3,0x02,RW)----------241
SSCG1 Setup - 4 : SSCG1 setup 4 (bank3,0x03,RW)----------242
PLL1 Setup - 6 : PLL1 setup 6 (bank3,0x43,RW) ----------243
PLL1 Setup - 7 : PLL1 setup 7 (bank3,0x44,RW) ----------244
PLL1 Setup - 1 : PLL1 setup 1 (bank3,0x45,RW) ----------245
PLL1 Setup - 2 : PLL1 setup 2 (bank3,0x46,RW) ----------247
PLL1 Setup - 5 : PLL1 setup 5 (bank3,0x47,RW) ----------248
PLL1 Setup - 3 : PLL1 setup 3 (bank3,0x49,RW) ----------249
PLL1 Setup - 4 : PLL1 setup 4 (bank3,0x4A,RW)----------250
MIPI Transmitter 1_2 Setup - 1 : MIPI transmitter 1_2 setup 1 (bank3,0x4D,RW)----------251
MIPI Transmitter 1_2 Setup - 2 : MIPI transmitter 1_2 setup 2 (bank3,0x4E,RW)----------252
MIPI Transmitter 1_2 Setup - 3 : MIPI transmitter 1_2 setup 3 (bank3,0x4F,RW) ----------253
MIPI Transmitter 1_2 Setup - 4 : MIPI transmitter 1_2 setup 4 (bank3,0x50,RW) ----------254
MIPI Transmitter 1_2 Setup - 5 : MIPI transmitter 1_2 setup 5 (bank3,0x51,RW) ----------255
MIPI Transmitter 1_2 Setup - 6 : MIPI transmitter 1_2 setup 6 (bank3,0x52,RW) ----------256
MIPI Transmitter 1_2 Setup - 7 : MIPI transmitter 1_2 setup 7 (bank3,0x53,RW) ----------257

For Desay

MIPI Transmitter 1_2 Setup - 8 : MIPI transmitter 1_2 setup 8 (bank3,0x54,RW) ----------258
MIPI Transmitter 1_2 Setup - 9 : MIPI transmitter 1_2 setup 9 (bank3,0x55,RW) ----------259
MIPI Transmitter 1_2 Setup - 10 : MIPI transmitter 1_2 setup 10 (bank3,0x56,RW) ----------260
MIPI Transmitter 1_2 Setup - 11 : MIPI transmitter 1_2 setup 11 (bank3,0x57,RW) ----------261
MIPI Transmitter 1_2 Setup - 12 : MIPI transmitter 1_2 setup 12 (bank3,0x58,RW) ----------262
MIPI Transmitter 1_2 Setup - 14 : MIPI transmitter 1_2 setup 14 (bank3,0x5A,RW) ----------263
MIPI Transmitter 1_2 Setup - 16 : MIPI transmitter 1_2 setup 16 (bank3,0x5D,RW) ----------264
MIPI Transmitter 1_3 Setup - 1 : MIPI transmitter 1_3 setup 1 (bank3,0x5F,RW) ----------265
MIPI Transmitter 1_3 Setup - 2 : MIPI transmitter 1_3 setup 2 (bank3,0x60,RW) ----------266
MIPI Transmitter 1_3 Setup - 3 : MIPI transmitter 1_3 setup 3 (bank3,0x61,RW) ----------267
MIPI Transmitter 1_3 Setup - 4 : MIPI transmitter 1_3 setup 4 (bank3,0x62,RW) ----------268
MIPI Transmitter 1_3 Setup - 5 : MIPI transmitter 1_3 setup 5 (bank3,0x63,RW) ----------269
MIPI Transmitter 1_3 Setup - 6 : MIPI transmitter 1_3 setup 6 (bank3,0x64,RW) ----------270
MIPI Transmitter 1_3 Setup - 7 : MIPI transmitter 1_3 setup 7 (bank3,0x65,RW) ----------271
MIPI Transmitter 1_3 Setup - 8 : MIPI transmitter 1_3 setup 8 (bank3,0x66,RW) ----------272
MIPI Transmitter 1_3 Setup - 9 : MIPI transmitter 1_3 setup 9 (bank3,0x67,RW) ----------273
MIPI Transmitter 1_3 Setup - 10 : MIPI transmitter 1_3 setup 10 (bank3,0x68,RW) ----------274
MIPI Transmitter 1_3 Setup - 11 : MIPI transmitter 1_3 setup 11 (bank3,0x69,RW) ----------275
MIPI Transmitter 1_3 Setup - 12 : MIPI transmitter 1_3 setup 12 (bank3,0x6A,RW) ----------276
MIPI Transmitter 1_3 Setup - 14 : MIPI transmitter 1_3 setup 14 (bank3,0x6C,RW) ----------277
MIPI Transmitter 1_3 Setup - 16 : MIPI transmitter 1_3 setup 16 (bank3,0x6F,RW) ----------278
GVIF3 receiver 2 Setup - 1 : GVIF3 receiver 2 setup 1 (bank3,0x71,RW) ----------279
GVIF3 receiver 2 Setup - 5 : GVIF3 receiver 2 setup 5 (bank3,0x72,RW) ----------280
GVIF3 receiver 2 Setup - 2 : GVIF3 receiver 2 setup 2 (bank3,0x74,RW) ----------281
GVIF3 receiver 2 Setup - 6 : GVIF3 receiver 2 setup 6 (bank3,0x77,RW) ----------282
GVIF3 Receiver 2 Monitor - 1 : GVIF3 receiver 2 monitor 1 (bank3,0x79,R) ----------283
GVIF3 Receiver 2 Monitor - 2 : GVIF3 receiver 2 monitor 2 (bank3,0x7B,R) ----------284
GVIF3 receiver 3 Setup - 1 : GVIF3 receiver 3 setup 1 (bank3,0x80,RW) ----------285
GVIF3 receiver 3 Setup - 5 : GVIF3 receiver 3 setup 5 (bank3,0x81,RW) ----------286
GVIF3 receiver 3 Setup - 2 : GVIF3 receiver 3 setup 2 (bank3,0x83,RW) ----------287
GVIF3 receiver 3 Setup - 6 : GVIF3 receiver 3 setup 6 (bank3,0x86,RW) ----------288
GVIF3 Receiver 3 Monitor - 1 : GVIF3 receiver 3 monitor 1 (bank3,0x88,R) ----------289
GVIF3 Receiver 3 Monitor - 2 : GVIF3 receiver 3 monitor 2 (bank3,0x8A,R) ----------290
GVIF3 Receiver 2 Setup - 4 : GVIF3 receiver 2 setup 4 (bank3,0x90,RW) ----------291
GVIF3 Receiver 3 Setup - 4 : GVIF3 receiver 3 setup 4 (bank3,0x91,RW) ----------292
MIPI Transmitter 1_2 Setup - 17 : MIPI transmitter 1_2 setup 17 (bank3,0x95,RW) ----------293
MIPI Transmitter 1_2 Setup - 18 : MIPI transmitter 1_2 setup 18 (bank3,0x96,RW) ----------294
MIPI Transmitter 1_2 Setup - 19 : MIPI transmitter 1_2 setup 19 (bank3,0x97,RW) ----------295
MIPI Transmitter 1_2 Setup - 20 : MIPI transmitter 1_2 setup 20 (bank3,0x98,RW) ----------296

For Desay

MIPI Transmitter 1_3 Setup - 17 : MIPI transmitter 1_3 setup 17 (bank3,0x99,RW) ----------297
MIPI Transmitter 1_3 Setup - 18 : MIPI transmitter 1_3 setup 18 (bank3,0x9A,RW)----------298
MIPI Transmitter 1_3 Setup - 19 : MIPI transmitter 1_3 setup 19 (bank3,0x9B,RW)----------299
MIPI Transmitter 1_3 Setup - 20 : MIPI transmitter 1_3 setup 20 (bank3,0x9C,RW) ----------300
GVIF3 receiver 2 Setup - 7 : GVIF3 receiver 2 setup 7 (bank3,0x9D,RW) ----------301
GVIF3 receiver 3 Setup - 7 : GVIF3 receiver 3 setup 7 (bank3,0x9E,RW) ----------302
Unloader 4 Setup - 1 : Unloader 4 setup 1 (bank3,0xA7,RW) ----------303
Unloader 4 Setup - 2 : Unloader 4 setup 2 (bank3,0xA8,RW) ----------304
Unloader 4 Monitor - 1 : Unloader 4 monitor 1 (bank3,0xA9,R) ----------305
Unloader 4 Setup - 3 : Unloader 4 setup 3 (bank3,0xAB,RW) ----------306
Unloader 4 Setup - 4 : Unloader 4 setup 4 (bank3,0xAD,RW)----------307
Unloader 5 Setup - 1 : Unloader 5 setup 1 (bank3,0xB0,RW) ----------308
Unloader 5 Setup - 2 : Unloader 5 setup 2 (bank3,0xB1,RW) ----------309
Unloader 5 Monitor - 1 : Unloader 5 monitor 1 (bank3,0xB2,R) ----------310
Unloader 5 Setup - 3 : Unloader 5 setup 3 (bank3,0xB4,RW) ---------- 311
Unloader 5 Setup - 4 : Unloader 5 setup 4 (bank3,0xB6,RW) ----------312
Unloader 6 Setup - 1 : Unloader 6 setup 1 (bank3,0xB9,RW) ----------313
Unloader 6 Setup - 2 : Unloader 6 setup 2 (bank3,0xBA,RW)----------314
Unloader 6 Monitor - 1 : Unloader 6 monitor 1 (bank3,0xBB,R)----------315
Unloader 6 Setup - 3 : Unloader 6 setup 3 (bank3,0xBD,RW)----------316
Unloader 6 Setup - 4 : Unloader 6 setup 4 (bank3,0xBF,RW)----------317
Unloader 7 Setup - 1 : Unloader 7 setup 1 (bank3,0xC2,RW) ----------318
Unloader 7 Setup - 2 : Unloader 7 setup 2 (bank3,0xC3,RW) ----------319
Unloader 7 Monitor - 1 : Unloader 7 monitor 1 (bank3,0xC4,R) ----------320
Unloader 7 Setup - 3 : Unloader 7 setup 3 (bank3,0xC6,RW) ----------321
Unloader 7 Setup - 4 : Unloader 7 setup 4 (bank3,0xC8,RW) ----------322
GVIF3 Receiver 2 Setup - 3 : GVIF3 receiver 2 setup 3 (bank3,0xCF,RW) ----------323
GVIF3 receiver 2 Setup - 9 : GVIF3 receiver 2 setup 9 (bank3,0xD4,RW) ----------324
GVIF3 Receiver 3 Setup - 3 : GVIF3 receiver 3 setup 3 (bank3,0xE4,RW) ----------325
GVIF3 receiver 3 Setup - 9 : GVIF3 receiver 3 setup 9 (bank3,0xE9,RW) ----------326
Aux1 Setup - 1 : Aux1 setup 1 (bank4,0x1A,RW) ----------327
Aux1 Setup - 6 : Aux1 setup 6 (bank4,0x1B,RW) ----------328
Aux1 Setup - 2 : Aux1 setup 2 (bank4,0x1C,RW) ----------329
Aux1 Setup - 3 : Aux1 setup 3 (bank4,0x1F,RW)----------330
Aux1 Setup - 5 : Aux1 setup 5 (bank4,0x23,RW)----------331
MIPI C-PHY Transmitter 0 Setup - 1 : MIPI C-PHY transmitter 0 setup 1 (bank10,0x00,RW) ----------332
MIPI C-PHY Transmitter 0 Setup - 2 : MIPI C-PHY transmitter 0 setup 2 (bank10,0x3E,RW)----------333
MIPI C-PHY Transmitter 0 Setup - 3 : MIPI C-PHY transmitter 0 setup 3 (bank10,0x3F,RW) ----------334
MIPI C-PHY Transmitter 0 Setup - 4 : MIPI C-PHY transmitter 0 setup 4 (bank10,0x40,RW) ----------335

For Desay

MIPI C-PHY Transmitter 0 Setup - 5 : MIPI C-PHY transmitter 0 setup 5 (bank10,0x41,RW) ----------336
MIPI C-PHY Transmitter 0 Setup - 6 : MIPI C-PHY transmitter 0 setup 6 (bank10,0x42,RW) ----------337
MIPI C-PHY Transmitter 0 Setup - 7 : MIPI C-PHY transmitter 0 setup 7 (bank10,0x43,RW) ----------338
MIPI C-PHY Transmitter 0 Setup - 8 : MIPI C-PHY transmitter 0 setup 8 (bank10,0x44,RW) ----------339
MIPI C-PHY Transmitter 0 Setup - 9 : MIPI C-PHY transmitter 0 setup 9 (bank10,0x45,RW) ----------340
MIPI C-PHY Transmitter 0 Setup - 10 : MIPI C-PHY transmitter 0 setup 10 (bank10,0x46,RW)----------341
MIPI C-PHY Transmitter 0 Setup - 11 : MIPI C-PHY transmitter 0 setup 11 (bank10,0x47,RW) ----------342
MIPI C-PHY Transmitter 0 Setup - 12 : MIPI C-PHY transmitter 0 setup 12 (bank10,0x48,RW)----------343
MIPI C-PHY Transmitter 0 Setup - 13 : MIPI C-PHY transmitter 0 setup 13 (bank10,0x49,RW)----------344
MIPI C-PHY Transmitter 0 Setup - 14 : MIPI C-PHY transmitter 0 setup 14 (bank10,0x4A,RW) ----------345
MIPI C-PHY Transmitter 0 Setup - 15 : MIPI C-PHY transmitter 0 setup 15 (bank10,0x4B,RW) ----------346
MIPI C-PHY Transmitter 0 Setup - 17 : MIPI C-PHY transmitter 0 setup 17 (bank10,0x4D,RW) ----------347
MIPI C-PHY Transmitter 0 Setup - 20 : MIPI C-PHY transmitter 0 setup 20 (bank10,0x53,RW)----------348
MIPI C-PHY Transmitter 0 Setup - 21 : MIPI C-PHY transmitter 0 setup 21 (bank10,0x54,RW)----------349
MIPI C-PHY Transmitter 0 Setup - 23 : MIPI C-PHY transmitter 0 setup 23 (bank10,0x83,RW)----------350
MIPI C-PHY Transmitter 0 Setup - 24 : MIPI C-PHY transmitter 0 setup 24 (bank10,0x84,RW)----------351
MIPI C-PHY Transmitter 0 Setup - 25 : MIPI C-PHY transmitter 0 setup 25 (bank10,0x85,RW)----------352
MIPI C-PHY Transmitter 0 Setup - 26 : MIPI C-PHY transmitter 0 setup 26 (bank10,0x86,RW)----------353
MIPI C-PHY Transmitter 0 Setup - 27 : MIPI C-PHY transmitter 0 setup 27 (bank10,0x87,RW)----------354
MIPI C-PHY Transmitter 0 Setup - 28 : MIPI C-PHY transmitter 0 setup 28 (bank10,0x88,RW)----------355
MIPI C-PHY Transmitter 0 Setup - 29 : MIPI C-PHY transmitter 0 setup 29 (bank10,0x89,RW)----------356
MIPI C-PHY Transmitter 0 Setup - 30 : MIPI C-PHY transmitter 0 setup 30 (bank10,0x8A,RW) ----------357
MIPI C-PHY Transmitter 0 Setup - 31 : MIPI C-PHY transmitter 0 setup 31 (bank10,0x8B,RW) ----------358
MIPI C-PHY Transmitter 0 Setup - 32 : MIPI C-PHY transmitter 0 setup 32 (bank10,0x8C,RW) ----------359
MIPI C-PHY Transmitter 0 Setup - 33 : MIPI C-PHY transmitter 0 setup 33 (bank10,0x8D,RW) ----------360
MIPI C-PHY Transmitter 0 Setup - 34 : MIPI C-PHY transmitter 0 setup 34 (bank10,0x8E,RW) ----------361
MIPI C-PHY Transmitter 0 Setup - 35 : MIPI C-PHY transmitter 0 setup 35 (bank10,0x8F,RW)----------362
MIPI C-PHY Transmitter 0 Setup - 36 : MIPI C-PHY transmitter 0 setup 36 (bank10,0x90,RW)----------363
MIPI C-PHY Transmitter 0 Setup - 37 : MIPI C-PHY transmitter 0 setup 37 (bank10,0x91,RW)----------364
MIPI C-PHY Transmitter 0 Setup - 38 : MIPI C-PHY transmitter 0 setup 38 (bank10,0x92,RW)----------365
MIPI C-PHY Transmitter 0 Setup - 39 : MIPI C-PHY transmitter 0 setup 39 (bank10,0x93,RW)----------366
MIPI C-PHY Transmitter 0 Setup - 40 : MIPI C-PHY transmitter 0 setup 40 (bank10,0x94,RW)----------367
MIPI C-PHY Transmitter 0 Setup - 41 : MIPI C-PHY transmitter 0 setup 41 (bank10,0x95,RW)----------368
MIPI C-PHY Transmitter 0 Setup - 42 : MIPI C-PHY transmitter 0 setup 42 (bank10,0x96,RW)----------369
MIPI C-PHY Transmitter 0 Setup - 43 : MIPI C-PHY transmitter 0 setup 43 (bank10,0x97,RW)----------370
MIPI C-PHY Transmitter 0 Setup - 44 : MIPI C-PHY transmitter 0 setup 44 (bank10,0x98,RW)----------371
MIPI C-PHY Transmitter 0 Setup - 45 : MIPI C-PHY transmitter 0 setup 45 (bank10,0x99,RW)----------372
MIPI C-PHY Transmitter 0 Setup - 46 : MIPI C-PHY transmitter 0 setup 46 (bank10,0x9A,RW) ----------373
MIPI C-PHY Transmitter 0 Setup - 47 : MIPI C-PHY transmitter 0 setup 47 (bank10,0x9B,RW) ----------374

For Desay

MIPI C-PHY Transmitter 0 Setup - 48 : MIPI C-PHY transmitter 0 setup 48 (bank10,0x9C,RW) ----------375
MIPI C-PHY Transmitter 0 Setup - 49 : MIPI C-PHY transmitter 0 setup 49 (bank10,0x9D,RW) ----------376
MIPI C-PHY Transmitter 0 Setup - 50 : MIPI C-PHY transmitter 0 setup 50 (bank10,0x9E,RW) ----------377
MIPI C-PHY Transmitter 0 Setup - 51 : MIPI C-PHY transmitter 0 setup 51 (bank10,0x9F,RW)----------378
MIPI C-PHY Transmitter 0 Setup - 52 : MIPI C-PHY transmitter 0 setup 52 (bank10,0xA0,RW) ----------379
MIPI C-PHY Transmitter 0 Setup - 53 : MIPI C-PHY transmitter 0 setup 53 (bank10,0xA1,RW) ----------380
MIPI C-PHY Transmitter 0 Setup - 54 : MIPI C-PHY transmitter 0 setup 54 (bank10,0xA2,RW) ----------381
MIPI C-PHY Transmitter 0 Setup - 55 : MIPI C-PHY transmitter 0 setup 55 (bank10,0xA3,RW) ----------382
MIPI C-PHY Transmitter 0 Setup - 56 : MIPI C-PHY transmitter 0 setup 56 (bank10,0xA4,RW) ----------383
MIPI C-PHY Transmitter 0 Setup - 60 : MIPI C-PHY transmitter 0 setup 60 (bank10,0xA9,RW) ----------384
MIPI C-PHY Transmitter 0 Setup - 65 : MIPI C-PHY transmitter 0 setup 65 (bank10,0xDF,RW) ----------385
MIPI C-PHY Transmitter 0 Setup - 68 : MIPI C-PHY transmitter 0 setup 68 (bank10,0xE6,RW) ----------386
MIPI C-PHY Transmitter 0 Setup - 71 : MIPI C-PHY transmitter 0 setup 71 (bank10,0xEA,RW)----------387
MIPI C-PHY Transmitter 0 Setup - 81 : MIPI C-PHY transmitter 0 setup 81 (bank10,0xF6,RW)----------388
MIPI C-PHY Transmitter 0 Setup - 82 : MIPI C-PHY transmitter 0 setup 82 (bank10,0xF7,RW)----------389
MIPI C-PHY Transmitter 1 Setup - 1 : MIPI C-PHY transmitter 1 setup 1 (bank11,0x00,RW) ----------390
MIPI C-PHY Transmitter 1 Setup - 2 : MIPI C-PHY transmitter 1 setup 2 (bank11,0x3E,RW)----------391
MIPI C-PHY Transmitter 1 Setup - 3 : MIPI C-PHY transmitter 1 setup 3 (bank11,0x3F,RW) ----------392
MIPI C-PHY Transmitter 1 Setup - 4 : MIPI C-PHY transmitter 1 setup 4 (bank11,0x40,RW) ----------393
MIPI C-PHY Transmitter 1 Setup - 5 : MIPI C-PHY transmitter 1 setup 5 (bank11,0x41,RW) ----------394
MIPI C-PHY Transmitter 1 Setup - 6 : MIPI C-PHY transmitter 1 setup 6 (bank11,0x42,RW) ----------395
MIPI C-PHY Transmitter 1 Setup - 7 : MIPI C-PHY transmitter 1 setup 7 (bank11,0x43,RW) ----------396
MIPI C-PHY Transmitter 1 Setup - 8 : MIPI C-PHY transmitter 1 setup 8 (bank11,0x44,RW) ----------397
MIPI C-PHY Transmitter 1 Setup - 9 : MIPI C-PHY transmitter 1 setup 9 (bank11,0x45,RW) ----------398
MIPI C-PHY Transmitter 1 Setup - 10 : MIPI C-PHY transmitter 1 setup 10 (bank11,0x46,RW)----------399
MIPI C-PHY Transmitter 1 Setup - 11 : MIPI C-PHY transmitter 1 setup 11 (bank11,0x47,RW) ----------400
MIPI C-PHY Transmitter 1 Setup - 12 : MIPI C-PHY transmitter 1 setup 12 (bank11,0x48,RW)----------401
MIPI C-PHY Transmitter 1 Setup - 13 : MIPI C-PHY transmitter 1 setup 13 (bank11,0x49,RW)----------402
MIPI C-PHY Transmitter 1 Setup - 14 : MIPI C-PHY transmitter 1 setup 14 (bank11,0x4A,RW)----------403
MIPI C-PHY Transmitter 1 Setup - 15 : MIPI C-PHY transmitter 1 setup 15 (bank11,0x4B,RW)----------404
MIPI C-PHY Transmitter 1 Setup - 17 : MIPI C-PHY transmitter 1 setup 17 (bank11,0x4D,RW) ----------405
MIPI C-PHY Transmitter 1 Setup - 20 : MIPI C-PHY transmitter 1 setup 20 (bank11,0x53,RW)----------406
MIPI C-PHY Transmitter 1 Setup - 21 : MIPI C-PHY transmitter 1 setup 21 (bank11,0x54,RW)----------407
MIPI C-PHY Transmitter 1 Setup - 23 : MIPI C-PHY transmitter 1 setup 23 (bank11,0x83,RW)----------408
MIPI C-PHY Transmitter 1 Setup - 24 : MIPI C-PHY transmitter 1 setup 24 (bank11,0x84,RW)----------409
MIPI C-PHY Transmitter 1 Setup - 25 : MIPI C-PHY transmitter 1 setup 25 (bank11,0x85,RW)----------410
MIPI C-PHY Transmitter 1 Setup - 26 : MIPI C-PHY transmitter 1 setup 26 (bank11,0x86,RW)---------- 411
MIPI C-PHY Transmitter 1 Setup - 27 : MIPI C-PHY transmitter 1 setup 27 (bank11,0x87,RW)----------412
MIPI C-PHY Transmitter 1 Setup - 28 : MIPI C-PHY transmitter 1 setup 28 (bank11,0x88,RW)----------413

For Desay

MIPI C-PHY Transmitter 1 Setup - 29 : MIPI C-PHY transmitter 1 setup 29 (bank11,0x89,RW) ----------414
MIPI C-PHY Transmitter 1 Setup - 30 : MIPI C-PHY transmitter 1 setup 30 (bank11,0x8A,RW)----------415
MIPI C-PHY Transmitter 1 Setup - 31 : MIPI C-PHY transmitter 1 setup 31 (bank11,0x8B,RW)----------416
MIPI C-PHY Transmitter 1 Setup - 32 : MIPI C-PHY transmitter 1 setup 32 (bank11,0x8C,RW) ----------417
MIPI C-PHY Transmitter 1 Setup - 33 : MIPI C-PHY transmitter 1 setup 33 (bank11,0x8D,RW) ----------418
MIPI C-PHY Transmitter 1 Setup - 34 : MIPI C-PHY transmitter 1 setup 34 (bank11,0x8E,RW)----------419
MIPI C-PHY Transmitter 1 Setup - 35 : MIPI C-PHY transmitter 1 setup 35 (bank11,0x8F,RW) ----------420
MIPI C-PHY Transmitter 1 Setup - 36 : MIPI C-PHY transmitter 1 setup 36 (bank11,0x90,RW) ----------421
MIPI C-PHY Transmitter 1 Setup - 37 : MIPI C-PHY transmitter 1 setup 37 (bank11,0x91,RW) ----------422
MIPI C-PHY Transmitter 1 Setup - 38 : MIPI C-PHY transmitter 1 setup 38 (bank11,0x92,RW) ----------423
MIPI C-PHY Transmitter 1 Setup - 39 : MIPI C-PHY transmitter 1 setup 39 (bank11,0x93,RW) ----------424
MIPI C-PHY Transmitter 1 Setup - 40 : MIPI C-PHY transmitter 1 setup 40 (bank11,0x94,RW) ----------425
MIPI C-PHY Transmitter 1 Setup - 41 : MIPI C-PHY transmitter 1 setup 41 (bank11,0x95,RW) ----------426
MIPI C-PHY Transmitter 1 Setup - 42 : MIPI C-PHY transmitter 1 setup 42 (bank11,0x96,RW) ----------427
MIPI C-PHY Transmitter 1 Setup - 43 : MIPI C-PHY transmitter 1 setup 43 (bank11,0x97,RW) ----------428
MIPI C-PHY Transmitter 1 Setup - 44 : MIPI C-PHY transmitter 1 setup 44 (bank11,0x98,RW) ----------429
MIPI C-PHY Transmitter 1 Setup - 45 : MIPI C-PHY transmitter 1 setup 45 (bank11,0x99,RW) ----------430
MIPI C-PHY Transmitter 1 Setup - 46 : MIPI C-PHY transmitter 1 setup 46 (bank11,0x9A,RW)----------431
MIPI C-PHY Transmitter 1 Setup - 47 : MIPI C-PHY transmitter 1 setup 47 (bank11,0x9B,RW)----------432
MIPI C-PHY Transmitter 1 Setup - 48 : MIPI C-PHY transmitter 1 setup 48 (bank11,0x9C,RW) ----------433
MIPI C-PHY Transmitter 1 Setup - 49 : MIPI C-PHY transmitter 1 setup 49 (bank11,0x9D,RW) ----------434
MIPI C-PHY Transmitter 1 Setup - 50 : MIPI C-PHY transmitter 1 setup 50 (bank11,0x9E,RW)----------435
MIPI C-PHY Transmitter 1 Setup - 51 : MIPI C-PHY transmitter 1 setup 51 (bank11,0x9F,RW) ----------436
MIPI C-PHY Transmitter 1 Setup - 52 : MIPI C-PHY transmitter 1 setup 52 (bank11,0xA0,RW)----------437
MIPI C-PHY Transmitter 1 Setup - 53 : MIPI C-PHY transmitter 1 setup 53 (bank11,0xA1,RW)----------438
MIPI C-PHY Transmitter 1 Setup - 54 : MIPI C-PHY transmitter 1 setup 54 (bank11,0xA2,RW)----------439
MIPI C-PHY Transmitter 1 Setup - 55 : MIPI C-PHY transmitter 1 setup 55 (bank11,0xA3,RW)----------440
MIPI C-PHY Transmitter 1 Setup - 56 : MIPI C-PHY transmitter 1 setup 56 (bank11,0xA4,RW)----------441
MIPI C-PHY Transmitter 1 Setup - 60 : MIPI C-PHY transmitter 1 setup 60 (bank11,0xA9,RW)----------442
MIPI C-PHY Transmitter 1 Setup - 65 : MIPI C-PHY transmitter 1 setup 65 (bank11,0xDF,RW)----------443
MIPI C-PHY Transmitter 1 Setup - 68 : MIPI C-PHY transmitter 1 setup 68 (bank11,0xE6,RW)----------444
MIPI C-PHY Transmitter 1 Setup - 71 : MIPI C-PHY transmitter 1 setup 71 (bank11,0xEA,RW) ----------445
MIPI C-PHY Transmitter 1 Setup - 81 : MIPI C-PHY transmitter 1 setup 81 (bank11,0xF6,RW)----------446
MIPI C-PHY Transmitter 1 Setup - 82 : MIPI C-PHY transmitter 1 setup 82 (bank11,0xF7,RW)----------447
MIPI C-PHY Transmitter Common Setup - 1 : MIPI C-PHY transmitter common setup 1 (bank12,0x00,RW)---------448
Unloader 0 Setup - 5 : Unloader 0 setup 5 (bank12,0x10,RW) ----------449
Unloader 0 Setup - 6 : Unloader 0 setup 6 (bank12,0x11,RW) ----------450
Unloader 0 Setup - 7 : Unloader 0 setup 7 (bank12,0x12,RW) ----------451
Unloader 0 Setup - 8 : Unloader 0 setup 8 (bank12,0x13,RW) ----------452

For Desay

Unloader 0 Setup - 9 : Unloader 0 setup 9 (bank12,0x14,RW) ----------453
Unloader 1 Setup - 5 : Unloader 1 setup 5 (bank12,0x18,RW) ----------454
Unloader 1 Setup - 6 : Unloader 1 setup 6 (bank12,0x19,RW) ----------455
Unloader 1 Setup - 7 : Unloader 1 setup 7 (bank12,0x1A,RW) ----------456
Unloader 1 Setup - 8 : Unloader 1 setup 8 (bank12,0x1B,RW) ----------457
Unloader 1 Setup - 9 : Unloader 1 setup 9 (bank12,0x1C,RW) ----------458
Unloader 2 Setup - 5 : Unloader 2 setup 5 (bank12,0x20,RW) ----------459
Unloader 2 Setup - 6 : Unloader 2 setup 6 (bank12,0x21,RW) ----------460
Unloader 2 Setup - 7 : Unloader 2 setup 7 (bank12,0x22,RW) ----------461
Unloader 2 Setup - 8 : Unloader 2 setup 8 (bank12,0x23,RW) ----------462
Unloader 2 Setup - 9 : Unloader 2 setup 9 (bank12,0x24,RW) ----------463
Unloader 3 Setup - 5 : Unloader 3 setup 5 (bank12,0x28,RW) ----------464
Unloader 3 Setup - 6 : Unloader 3 setup 6 (bank12,0x29,RW) ----------465
Unloader 3 Setup - 7 : Unloader 3 setup 7 (bank12,0x2A,RW) ----------466
Unloader 3 Setup - 8 : Unloader 3 setup 8 (bank12,0x2B,RW) ----------467
Unloader 3 Setup - 9 : Unloader 3 setup 9 (bank12,0x2C,RW) ----------468
Unloader 4 Setup - 5 : Unloader 4 setup 5 (bank12,0x30,RW) ----------469
Unloader 4 Setup - 6 : Unloader 4 setup 6 (bank12,0x31,RW) ----------470
Unloader 4 Setup - 7 : Unloader 4 setup 7 (bank12,0x32,RW) ----------471
Unloader 4 Setup - 8 : Unloader 4 setup 8 (bank12,0x33,RW) ----------472
Unloader 4 Setup - 9 : Unloader 4 setup 9 (bank12,0x34,RW) ----------473
Unloader 5 Setup - 5 : Unloader 5 setup 5 (bank12,0x38,RW) ----------474
Unloader 5 Setup - 6 : Unloader 5 setup 6 (bank12,0x39,RW) ----------475
Unloader 5 Setup - 7 : Unloader 5 setup 7 (bank12,0x3A,RW) ----------476
Unloader 5 Setup - 8 : Unloader 5 setup 8 (bank12,0x3B,RW) ----------477
Unloader 5 Setup - 9 : Unloader 5 setup 9 (bank12,0x3C,RW) ----------478
Unloader 6 Setup - 5 : Unloader 6 setup 5 (bank12,0x40,RW) ----------479
Unloader 6 Setup - 6 : Unloader 6 setup 6 (bank12,0x41,RW) ----------480
Unloader 6 Setup - 7 : Unloader 6 setup 7 (bank12,0x42,RW) ----------481
Unloader 6 Setup - 8 : Unloader 6 setup 8 (bank12,0x43,RW) ----------482
Unloader 6 Setup - 9 : Unloader 6 setup 9 (bank12,0x44,RW) ----------483
Unloader 7 Setup - 5 : Unloader 7 setup 5 (bank12,0x48,RW) ----------484
Unloader 7 Setup - 6 : Unloader 7 setup 6 (bank12,0x49,RW) ----------485
Unloader 7 Setup - 7 : Unloader 7 setup 7 (bank12,0x4A,RW) ----------486
Unloader 7 Setup - 8 : Unloader 7 setup 8 (bank12,0x4B,RW) ----------487
Unloader 7 Setup - 9 : Unloader 7 setup 9 (bank12,0x4C,RW) ----------488
Application Circuit ----------489
Package Outline ----------490
Marking ----------491

For Desay

Notice ----------492
Purpose of Use of the Products: ----------492
Safe Design: ----------492
Product Information:----------492
EXCLUSION OF WARRANTY ON THE PRODUCTS:----------492
LIMITATION OF LIABILITY: ----------493
Compliance with Laws: ----------493
Governing Law:----------493
Notes: ----------493
Preliminary Revision History ----------494

For Desay

Absolute Maximum Ratings

Item	Symbol	Min.	Max.	Unit
Supply voltage (V_{DD}11, V_{DD}11A_G3TX, V_{DD}11A_G3TXP, V_{DD}11A_G3RX, V_{DD}11A_MIPITX0, V_{DD}11A_MIPITX1)	V_11	-0.3	1.54	V
Supply voltage (V_{DD}18A_G3RX, V_{DD}18A_MIPITX0, V_{DD}18A_MIPITX1)	V_18	-0.3	1.98	V
Supply voltage (V_{DD}IO) (When setting 1.8 V interface)	V_IO	-0.3	1.98	V
Supply voltage (V_{DD}IO) (When setting 3.3 V interface)		-0.3	3.63	V
CMOS input / output pin voltage (When setting 1.8 V interface)	V_M	-0.3	V_{DD}IO + 0.3 (≤ V_IO)	V
CMOS input / output pin voltage (When setting 3.3 V interface)		-0.3	V_{DD}IO + 0.3 (≤ V_IO)	V
I2CADR pin voltage	V_I2CADR	-0.3	V_{DD}IO + 0.3 (≤ V_IO)	V
GVIFID pin voltage	V_GVIFID	-0.3	V_{DD}IO + 0.3 (≤ V_IO)	V
EXT_A pin voltage	V_EXT_A	-0.3	V_{DD}IO + 0.3 (≤ V_IO)	V
D*4* pin voltage	V_MIPI	-0.3	V_{DD}11A_MIPITX* + 0.3 (≤ 1.54)	V
G3TX_SDP, G3TX_SDN pin voltage (When AC coupling is not used)	V_G3TXSD	-0.3	V_{DD}11A_G3TX + 0.3 (≤ 1.54)	V
G3RX0_SDP, G3RX0_SDN pin voltage G3RX1_SDP, G3RX1_SDN pin voltage G3RX2_SDP, G3RX2_SDN pin voltage G3RX3_SDP, G3RX3_SDN pin voltage (When AC coupling is not used)	V_G3RXSD	-0.3	V_{DD}18A_G3RX + 0.3 (≤ 1.98)	V
Storage temperature	Tstg	-55	125	˚C

Recommended Operating Conditions

Item	Symbol	Min.	Typ.	Max.	Unit
Supply voltage	V_{DD}11, V_{DD}11A_G3TX, V_{DD}11A_G3TXP, V_{DD}11A_G3RX, V_{DD}11A_MIPITX0, V_{DD}11A_MIPITX1	1.045	1.1	1.155	V
	V_{DD}18A_G3RX, V_{DD}18A_MIPITX0, V_{DD}18A_MIPITX1	1.71	1.8	1.89	V
	V_{DD}IO (When setting 1.8 V interface)	1.71	1.8	1.89	V
	V_{DD}IO (When setting 3.3 V interface)	3.135	3.3	3.465	V
Ambient temperature	Ta	-40	—	+105	˚C

For Desay

Pin Description

Power Supply / GND

Symbol	Pin No.	Type	Description
V_{DD}11	22, 27, 49, 64	Digital power supply	Positive power supply 1.1 V
V_{DD}11A_G3TX	28	Analog power supply	Positive power supply 1.1 V
V_{DD}11A_G3TXP	31	Analog power supply	Positive power supply 1.1 V
V_{DD}11A_G3RX	41, 47	Analog power supply	Positive power supply 1.1 V
V_{DD}11A_MIPITX0	56	Analog power supply	Positive power supply 1.1 V
V_{DD}11A_MIPITX1	7	Analog power supply	Positive power supply 1.1 V
V_{DD}18A_G3RX	38, 44	Analog power supply	Positive power supply 1.8 V
V_{DD}18A_MIPITX0	61	Analog power supply	Positive power supply 1.8 V
V_{DD}18A_MIPITX1	12	Analog power supply	Positive power supply 1.8 V
V_{DD}IO	17, 33	CMOS IO power supply	Positive power supply 1.8 V or 3.3 V
V_{SS}	65 (Exposed Pad)	Analog and Digital GND	GND 0 V

GVIF3 Interface Signals

Symbol	Pin No.	Type	Equivalent circuit	Description
G3TX_SDP G3TX_SDN	30 29	GVIF3 signal input / output	(1)	GVIF3 serial data output (Downstream) GVIF3 serial data input (Upstream) Leave these pins open when they are not used.
G3RX0_SDP G3RX0_SDN	46 45	GVIF3 signal input / output	(2)	GVIF3 serial data input (Downstream) GVIF3 serial data output (Upstream) Leave these pins open when they are not used.
G3RX1_SDP G3RX1_SDN	43 42	GVIF3 signal input / output	(2)	GVIF3 serial data input (Downstream) GVIF3 serial data output (Upstream) Leave these pins open when they are not used.
G3RX2_SDP G3RX2_SDN	40 39	GVIF3 signal input / output	(2)	GVIF3 serial data input (Downstream) GVIF3 serial data output (Upstream) Leave these pins open when they are not used.
G3RX3_SDP G3RX3_SDN	37 36	GVIF3 signal input / output	(2)	GVIF3 serial data input (Downstream) GVIF3 serial data output (Upstream) Leave these pins open when they are not used.

For Desay

MIPI Interface Signals

Symbol	Pin No.	Type	Equivalent circuit	Description
D04xP D04xN	63 62	MIPI output	(3)	MIPI data / clock differential output (Port 0) Leave these pins open when they are not used. When they are not used and are connected to other devices by board pattern, the input of devices should be high impedance.
D040P D040N	60 59			
D041P D041N	58 57			
D04CP D04CN	55 54			
D042P D042N	53 52			
D043P D043N	51 50			
D14xP D14xN	14 13	MIPI output	(3)	MIPI data / clock differential output (Port 1) Leave these pins open when they are not used. When they are not used and are connected to other devices by board pattern, the input of devices should be high impedance.
D140P D140N	11 10			
D141P D141N	9 8			
D14CP D14CN	6 5			
D142P D142N	4 3			
D143P D143N	2 1			

Digital Signals

Symbol	Pin No.	Type	Equivalent circuit	Description
CE	26	CMOS input	(4)	System reset input
SDA0	19	CMOS input / output	(4)	I^2C input / output for Aux interface and register access interface The pull-up resistor should be set properly even though these interfaces are not used.
SCL0	18	CMOS input / output	(4)	
GENERAL_IO0 GENERAL_IO1 GENERAL_IO2 GENERAL_IO3 GENERAL_IO4	20 21 23 24 25	CMOS input / output	(4)	Sync signal input for image sensor, signal input / output for Aux / GPIO interface, signal input / output for register, INTERRUPT output, READY output. Function and pin assignment is selectable. Leave this pin open when it is set to output and it is not used. Leave this pin open when it is not set to output or input.
EXT_SM_FAULT	15	CMOS input / output	(4)	Fault notification signal input / output for safety mechanism.
SM_FAULT_X	16	CMOS output	(4)	Fault notification signal output for safety mechanism.

For Desay

Others

Symbol	Pin No.	Type	Equivalent circuit	Description
GVIFID	34	Analog input	(5)	GVIFID setup
I2CADR	32	Analog input	(5)	I^2C sub address setup
EXT_A EXT_E	35 48	—	(6) —	Test / extension pin Leave these pins open. When the system clock is input externally for the daisy chain connection, the system clock is input via No.35 pin.

For Desay

Equivalent Circuit

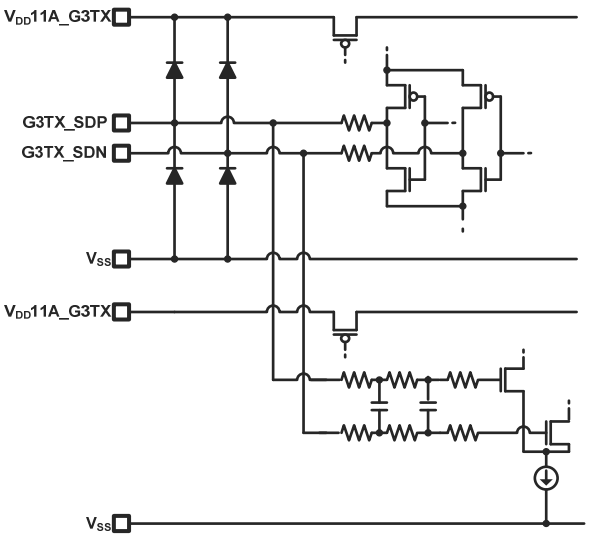

(1)

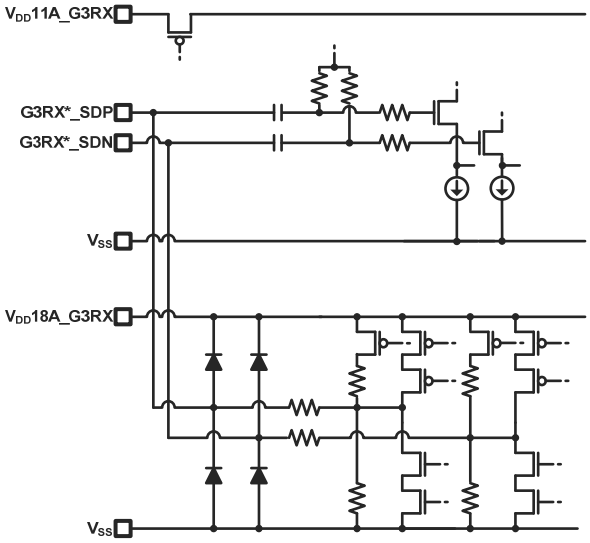

(2)

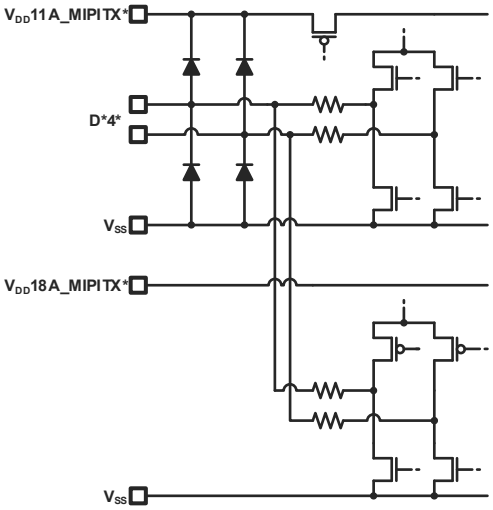

(3)

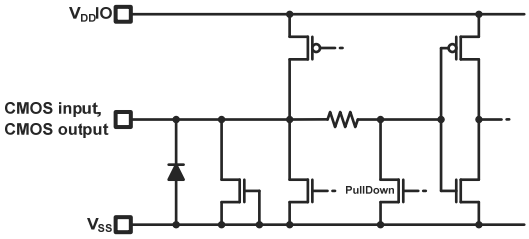

The pins which are input or set to input are pulled down.
The pins which are input or set to input do not have the hysteresis.

(4)

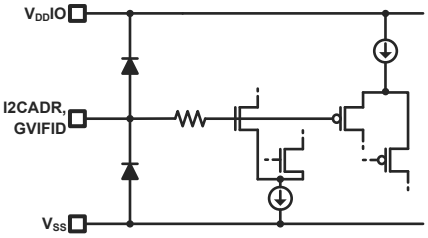

(5)

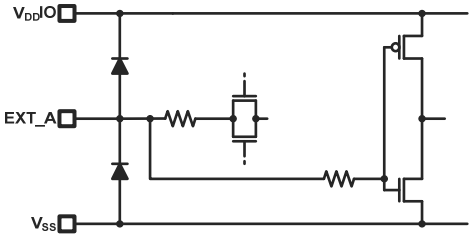

(6)

For Desay

Pin Configuration

(Top View)

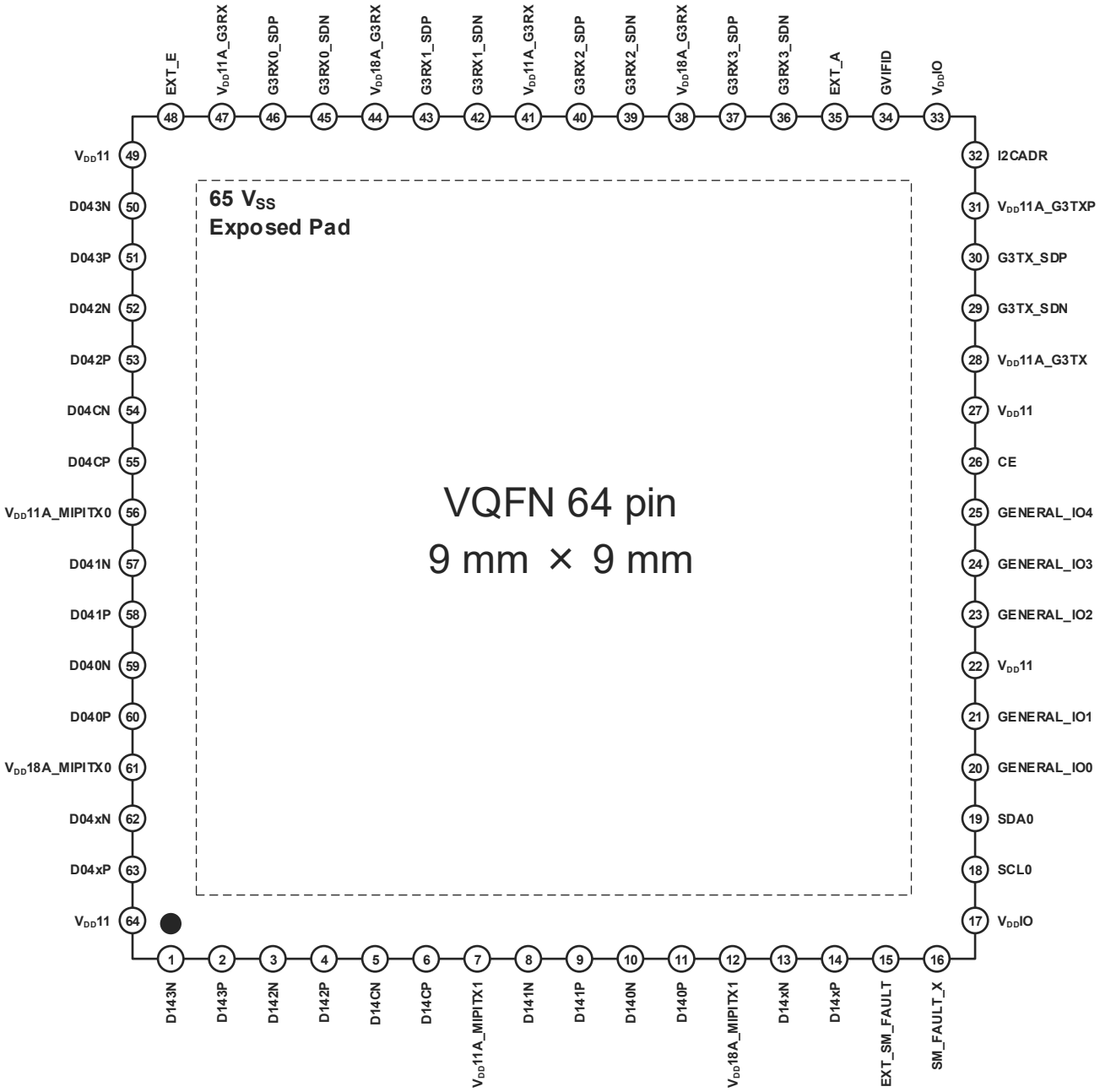

For Desay

Block Diagram

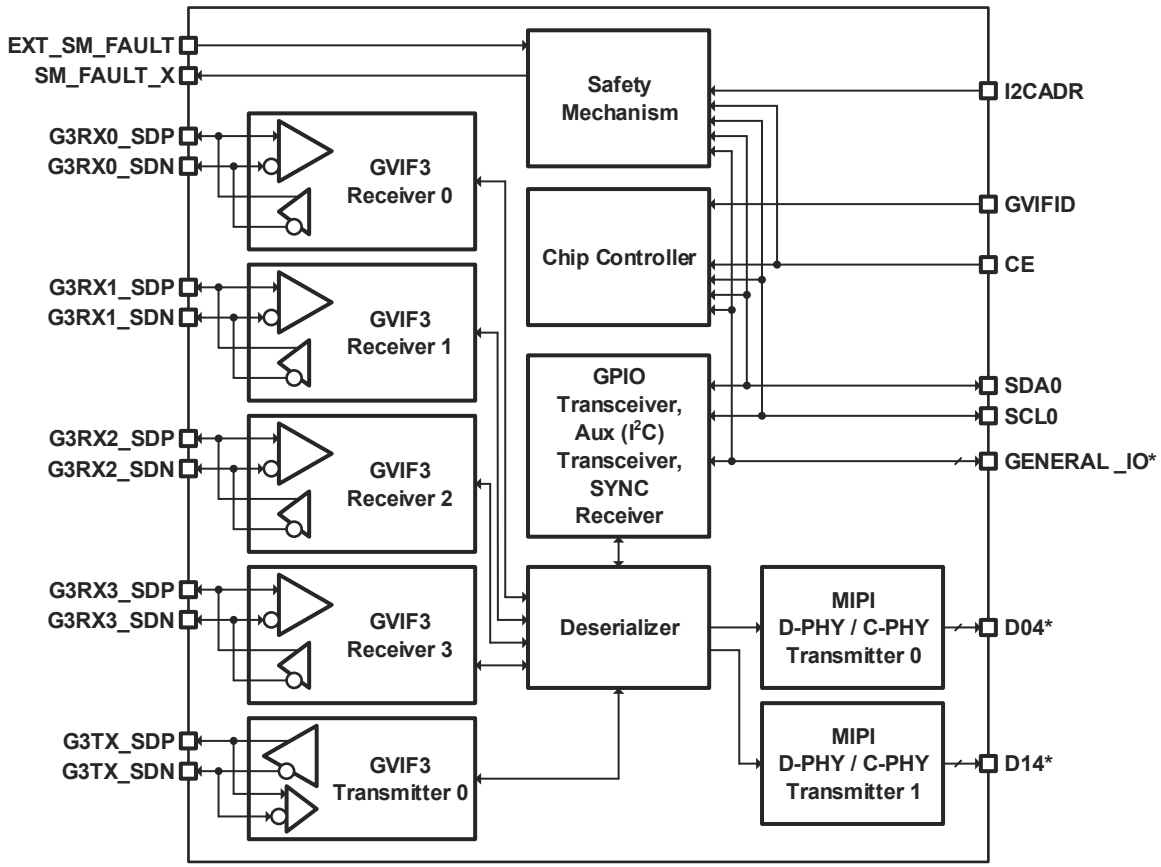

Fig. 1 Block Diagram of Deserializer

For Desay

Electrical Characteristics

DC Characteristics (Under the recommended conditions)

Item	Symbol	Min.	Typ.	Max.	Unit	Remarks
GVIF3 Interface						
G3TX_SDP / G3TX_SDN output differential amplitude	VOD_SD	690	800	910	mVp-p	Rload: 100 Ω 2 × |V (G3TX_SDP) - V (G3TX_SDN) |
G3TX_SDP / G3TX_SDN output termination resistance	RO_SD	40	50	60	Ω	
G3RX*_SDP / G3RX*_SDN input resistance 1	RI_SD1	—	8	—	kΩ	To V_{DD}18A_G3RX
G3RX*_SDP / G3RX*_SDN input resistance 2	RI_SD2	—	8	—	kΩ	To V_{SS}
MIPI Interface						
MIPI D-PHY HS transmit static common-mode voltage	VCMTX _MIPI	150	200	250	mV	(V (MIPITX_*P) + V (MIPITX_*N))/2
MIPI D-PHY HS VCMTX mismatch when output is Differential-1 or Differential-0	|ΔVCMTX (1,0)| _MIPI	—	—	5	mV	
MIPI D-PHY HS transmit differential voltage	|VOD| _MIPI	140	200	270	mV	|V (MIPITX_*P) – V (MIPITX_*N) |
MIPI D-PHY HS VOD mismatch when output is Differential-1 or Differential-0	|ΔVOD| _MIPI	—	—	14	mV	
MIPI D-PHY HS output high voltage	VOHHS _MIPI	—	—	360	mV	
MIPI D-PHY HS single ended output impedance	ZOS _MIPI	40	50	62.5	Ω	
MIPI D-PHY HS single ended output impedance mismatch	ΔZOS _MIPI	—	—	20	%	
MIPI D-PHY LP thevenin output high level	VOH _MIPI	0.95	—	1.3	V	
MIPI D-PHY LP thevenin output low level	VOL _MIPI	-50	—	50	mV	
MIPI D-PHY LP output impedance of LP transmitter	ZOLP _MIPI	110	—	—	Ω	
MIPI C-PHY HS transmit static common-mode voltage	VCPTX _MIPICPHY	175	225 to 250	310	mV	
MIPI C-PHY HS VCPTX mismatch when output is in any of the six high-speed states	|ΔVCPTX (HS)| _MIPICPHY	—	—	9	mV	
MIPI C-PHY HS transmit differential voltage of the differential strong one and strong zero	|VOD| strong_MIPICPHY	—	—	300	mV	

For Desay

Item	Symbol	Min.	Typ.	Max.	Unit	Remarks
MIPI C-PHY HS HS transmit differential voltage of the differential weak one and weak zero	|ΔVOD| weak_MIPICPHY	97	—	—	mV	
MIPI C-PHY HS VOD mismatch between the absolute values of the differential strong one and strong zero output voltages in any of the six possible high-speed states.	|ΔVod| _MIPICPHY	—	—	17	mV	
MIPI C-PHY HS output high voltage	VOHHS _MIPICPHY	—	—	425	mV	
MIPI C-PHY HS Single-Ended Output Impedance Unterminated	ZOS _MIPICPHY	40	50	60	Ω	
MIPI C-PHY HS Single-Ended Output Impedance Mismatch Unterminated	ΔZOS _MIPICPHY	—	—	10	%	
MIPI C-PHY LP thevenin output high level	VOH _MIPICPHY	0.95	—	1.3	V	
MIPI C-PHY LP thevenin output low level	VOL _MIPICPHY	-50	—	50	mV	
MIPI C-PHY LP output impedance of LP transmitter	ZOLP _MIPICPHY	110	—	—	Ω	
Others						
CMOS input high level voltage	VIH_M	0.7 × V_{DD}IO	—	V_{DD}IO + 0.3	V	When setting 1.8 V interface for CMOS IO.
		2.1	—	V_{DD}IO + 0.3	V	When setting 3.3 V interface for CMOS IO.
CMOS input low level voltage	VIL_M	-0.3	—	0.3 × V_{DD}IO	V	When setting 1.8 V interface for CMOS IO.
		-0.3	—	0.7	V	When setting 3.3 V interface for CMOS IO.
CMOS input high level current	IIH_M	—	—	100	μA	When setting 3.3 V interface for CMOS IO. VIN = V_{DD}IO
CMOS input low level current	IIL_M	-10	—	—	μA	When setting 3.3 V interface for CMOS IO. VIN = 0 V
CMOS output high level voltage	VOH_M	0.7 × V_{DD}IO	—	—	V	When setting 1.8 V interface for CMOS IO. IOH = -1 mA
		2.4	—	—	V	When setting 3.3 V interface for CMOS IO. IOH = -2 mA
CMOS output low level voltage	VOL_M	—	—	0.4	V	When setting 1.8 V interface for CMOS IO. IOL = 1 mA
		—	—	0.4	V	When setting 3.3 V interface for CMOS IO. IOL = 2 mA

For Desay

Item	Symbol	Min.	Typ.	Max.	Unit	Remarks
I^2C input high level voltage	VIH_I2C	0.7 × $V_{DD}IO$	—	$V_{DD}IO$ + 0.3	V	Conform to I^2C Bus Standard of NXP.
I^2C input low level voltage	VIL_I2C	-0.3	—	0.3 × $V_{DD}IO$	V	Conform to I^2C Bus Standard of NXP.
EXT_A input high level voltage	VIH _EXT_A	0.7 × $V_{DD}IO$	—	$V_{DD}IO$ + 0.3	V	When setting 1.8 V interface for CMOS IO.
		2.1	—	$V_{DD}IO$ + 0.3	V	When setting 3.3 V interface for CMOS IO.
EXT_A input low level voltage	VIL _EXT_A	-0.3	—	0.3 × $V_{DD}IO$	V	When setting 1.8 V interface for CMOS IO.
		-0.3	—	0.7	V	When setting 3.3 V interface for CMOS IO.
EXT_A input high level current	IIH _EXT_A	—	—	10	μA	When setting 3.3 V interface for CMOS IO. VIN = $V_{DD}IO$
EXT_A input low level current	IIL _EXT_A	-10	—	—	μA	When setting 3.3 V interface for CMOS IO. VIN = 0 V
Supply current	ICC_1.1 V	—	355	685	mA	When setting Point to Point connection 7.2 Gbps, 4port MIPI D-PHY CSI-2 : 2520 Mbps / Lane, 2 lanes, sub2port, 2port Fclk_MASTERCLK = 50 MHz
	ICC_1.8 V	—	188	264		
	ICC_IO	—	0.1	0.3		

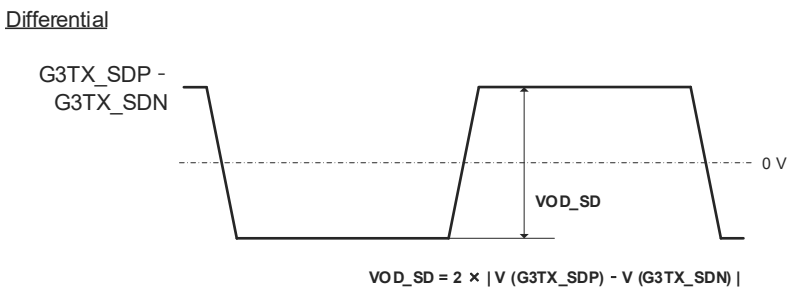

Fig. 2 GVIF3 Serial Output Signal (Downstream) (Differential)

AC Characteristics (Under the recommended conditions)

Item	Symbol	Min.	Typ.	Max.	Unit	Remarks
GVIF3 Interface						
G3TX_SDP / G3TX_SDN rise time	Tor_SD	—	20	—	ps	20 % - 80 %
G3TX_SDP / G3TX_SDN fall time	Tof_SD	—	20	—	ps	20 % - 80 %
MIPI Interface						
MIPI D-PHY output data rate	DR_MIPI	260	—	4500	Mbps	1 or 2 Lanes
		260	—	4500	Mbps	4 Lanes
MIPI D-PHY output clock frequency	Fclk_MIPI	130	—	2250	MHz	
MIPI D-PHY HS UI instantaneous	UIinst _MIPI	—	—	12.5	ns	

For Desay

Item	Symbol	Min.	Typ.	Max.	Unit	Remarks
MIPI D-PHY HS common-level variations above 450 MHz	ΔVCMTX (HF) _MIPI	—	—	15	mV rms	
MIPI D-PHY HS common-level variations between 5 - 450 MHz	ΔVCMTX (LF) _MIPI	—	—	25	mV peak	
HS-TX differential reflection (225 MHz)	SddTX (225 MHz) _MIPI	—	—	-15	dB	
HS-TX differential reflection (2.25 GHz)	SddTX (2.25 GHz) _MIPI	—	—	-2	dB	
HS-TX differential reflection (4.5 GHz * 3/4)	SddTX (4.5 GHz *3/4) _MIPI	—	—	-1	dB	
HS-TX common mode reflection	SccTX (10 M - 4.5 GHz *3/4) _MIPI	—	—	-1	dB	
HS data to HS clock skew	Tskew [TX] _MIPI	-0.15	—	0.15	UI	DR_MIPI ≤ 1000 Mbps
		-0.2	—	0.2	UI	DR_MIPI > 1000 Mbps DR_MIPI ≤ 1500 Mbps
HS data to HS clock total jitter	TJTX _MIPI	—	—	0.3	UI	DR_MIPI > 1500 Mbps
HS data to HS clock deterministic jitter	DJTX _MIPI	—	—	0.2	UI	DR_MIPI > 1500 Mbps
HS data to HS clock random jitter	RJTX _MIPI	—	—	0.1	UI	DR_MIPI > 1500 Mbps
Static HS data to HS clock skew	Tskew [TX] static _MIPI	-0.2		0.2	UI	DR_MIPI > 1500 Mbps
MIPI D-PHY LP output rise time, output fall time (15 % - 85 %)	TRLP _MIPI TFLP _MIPI	—	—	25	ns	
MIPI D-PHY LP output rise time, output fall time (30 % - 85 %)	TREOT _MIPI	—	—	35	ns	VIH, MIN = 740 mV
MIPI D-PHY LP output slew rate @ CLOAD = 0 pF	δV / δtSR _MIPI	—	—	500	mV / ns	
MIPI D-PHY LP output slew rate @ CLOAD = 5 pF		—	—	300	mV / ns	
MIPI D-PHY LP output slew rate @ CLOAD = 20 pF		—	—	250	mV / ns	
MIPI D-PHY LP output slew rate @ CLOAD = 70 pF		—	—	150	mV / ns	
MIPI D-PHY LP output slew rate @ CLOAD = 0 - 70 pF (Falling Edge Only)		25	—	—	mV / ns	

For Desay

Item	Symbol	Min.	Typ.	Max.	Unit	Remarks
MIPI D-PHY LP output slew rate @ CLOAD = 0 - 70 pF (Rising Edge Only)		25	—	—	mV / ns	
MIPI D-PHY LP output slew rate @ CLOAD = 0 - 70 pF (Rising Edge Only)		25 - 0.0625 * (VO, INST - 550)	—	—	mV / ns	
MIPI D-PHY LP load capacitance	CLOAD _MIPI	0		70	pF	
MIPI C-PHY output data rate	DR_MIPI CPHY	TBD	—	4500	Msps	
MIPI C-PHY HS UI instantaneous	UIinst _MIPICP HY	—	—	12.5	ns	
MIPI C-PHY HS common-level variations above 450 MHz	ΔVCMTX (HF) _MIPICP HY	—	—	15	mV rms	
MIPI C-PHY HS common-level variations between 50 - 450 MHz	ΔVCMTX (LF) _MIPICP HY	—	—	25	mV peak	
MIPI C-PHY HS-TX differential reflection (10 MHz)	SddTX (10 MHz) _MIPICP HY	—	—	-18	dB	
HS-TX differential reflection (1.25 GHz)	SddTX (1.25 GHz) _MIPICP HY	—	—	-5	dB	
HS-TX differential reflection (1.875 GHz)	SddTX (1.875 GHz) _MIPICP HY	—	—	-3	dB	
HS-TX common mode reflection (10 M – 1.875 GHz)	SccTX (10 M – 1.875 GHz) _MIPICP HY	—	—	-3	dB	
MIPI C-PHY LP output slew rate @ CLOAD = 0 pF	δV / δtSR _MIPICP HY	—	—	500	mV / ns	
MIPI C-PHY LP output slew rate @ CLOAD = 5 pF		—	—	300	mV / ns	
MIPI C-PHY LP output slew rate @ CLOAD = 20 pF		—	—	250	mV / ns	
MIPI C-PHY LP output slew rate @ CLOAD = 70 pF		—	—	150	mV / ns	
MIPI C-PHY LP output slew rate		25	—	—	mV / ns	

For Desay

Item	Symbol	Min.	Typ.	Max.	Unit	Remarks
@ CLOAD = 0 - 70 pF (Falling Edge Only)						
MIPI C-PHY LP output slew rate @ CLOAD = 0 - 70 pF (Rising Edge Only)		25	—	—	mV / ns	
MIPI C-PHY LP output slew rate @ CLOAD = 0 - 70 pF (Rising Edge Only)		25 - 0.0625 * (VO, INST - 550)	—	—	mV / ns	
MIPI C-PHY LP load capacitance	CLOAD _MIPICP HY	0		70	pF	
Aux Interface						
I^2C input / output clock frequency	Fclk_I2C	—	—	1000	kHz	
Pulse width of I^2C input clock (H level)	Tscl_h	4.0	—	8.0	μs	Standard-mode
		0.6	—	2.0	μs	Fast-mode
		0.26	—	0.8	μs	Fast-mode Plus
SYNC Interface						
MASTER_CLK input frequency	Fclk_ MASTER CLK	5	—	50	MHz	MASTER_CLK_DIVISION _RATIO resister = 0000
		10	—	100	MHz	MASTER_CLK_DIVISION _RATIO resister = 0001
		20	—	120	MHz	MASTER_CLK_DIVISION _RATIO resister = 0011
MASTER_CLK input duty factor	Din_ MASTER CLK	40	—	60	%	Vth = V_{DD}IO/2
FRAME_SYNC input pulse width	Twidth_ FRAME SYNC	400	—	—	ns	
FRAME_SYNC input rise time, input fall time	Tir_FRA ME_SYN C, Tif_FRAM E_SYNC	—	—	1/ Fclk_MA STERCL K	s	30 % - 70 % when setting 1.8 V interface for CMOS IO. 0.7 V - 2.1 V when setting 3.3 V interface for CMOS IO. When MASTER_CLK signal is not assigned to shared pin, Fclk_MASTERCLK should be 21 MHz.
GPIO Interface						
GPIO data delay (Downstream)	Td_D _GPIO	1	—	35	μs	C_L = 10 pF When setting Point to Point connection. ~ 4.8 Gbps
		1	—	60	μs	C_L = 10 pF When setting Point to Point connection. 6.0 ~ 12.0 Gbps
GPIO data delay (Upstream)	Td_U _GPIO	25	—	500	μs	C_L = 10 pF When setting Point to Point connection.

For Desay

Item	Symbol	Min.	Typ.	Max.	Unit	Remarks
Others						
Valid reset pulse width	Twidth _CE	10	—	—	μs	
EXT_SM_FAULT delay	Td_EXT_ SM_FAU LT	—	—	2	ms	C_L = 10 pF
System clock input duty factor (EXT_A)	Dsysclk_ EXT_A	40	50	60	%	Vth = V_{DD}IO/2

For Desay

Timing Chart

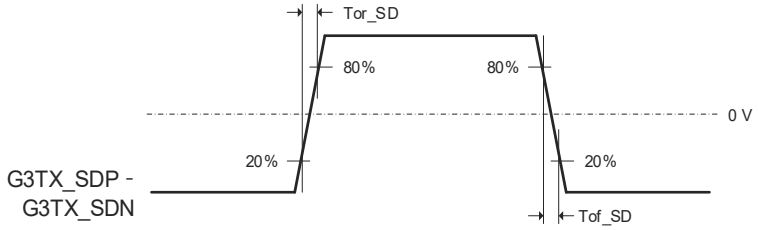

Fig. 3 GVIF3 Serial Output Signal Rise Time / Fall Time (Downstream)

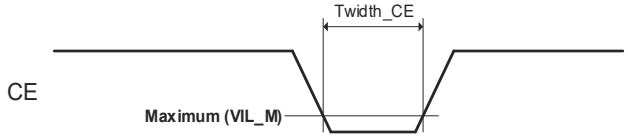

Fig. 4 Valid Reset Pulse Width of Chip Enable Signal

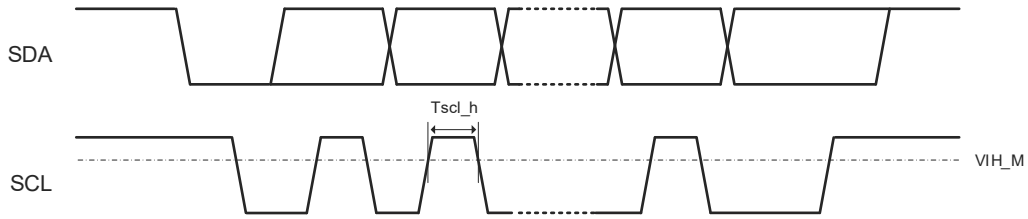

Fig. 5 Pulse Width of I^{2}C Input Clock (High Level)

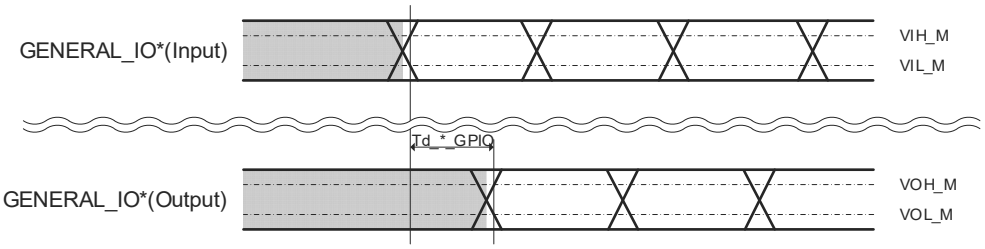

Fig. 6 Latency of GPIO Signal

For Desay

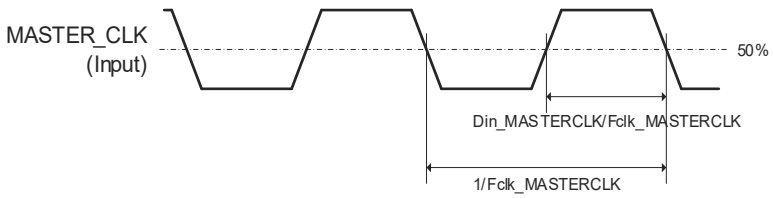

Fig. 7 Input Frequency, Duty Factor of MASTER_CLK Signal

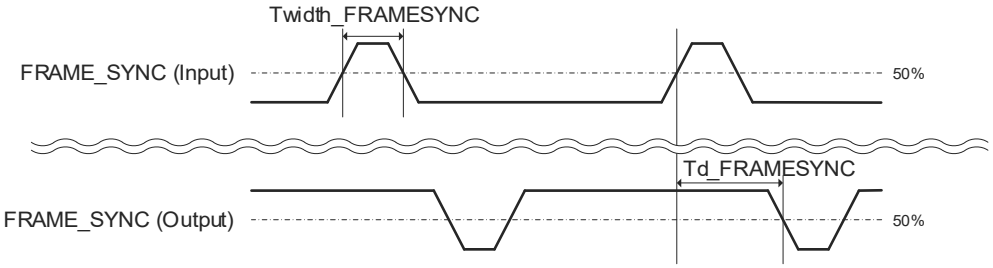

Fig. 8 Input Pulse Width of FRAME_SYNC Signal
(Example of low accuracy mode and FRAME_SYNC_POL_INVERT = 0 in serializer)

For Desay

Power Supply Voltage Power-on / off Sequence and Chip Enable Setup

There are three power supplies: 1.1 V, 1.8 V, IO (V_{DD}IO).

There are no restrictions on the power-on / off sequence for 1.1 V, 1.8 V, and IO power supplies. However, the chip enable signal must be input to CE pin so as to satisfy the following restrictions when power supplies are turned on. Make sure that all pins voltage do not exceed the absolute maximum ratings.

Power-on Sequence Restriction

Item	Symbol	Min.	Typ.	Max.	Unit	Remarks
CE wait time (For 1.1 V)	Twait_11	100	—	—	μs	
CE wait time (For 1.8 V)	Twait_18	100	—	—	μs	
CE wait time (For IO)	Twait_IO	100	—	—	μs	

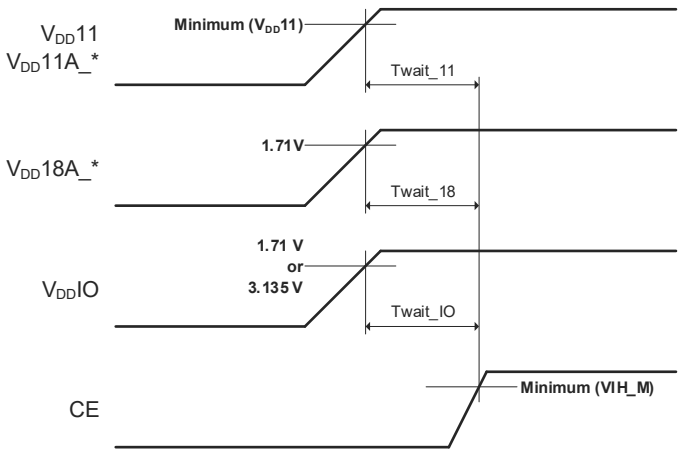

Fig. 9 Chip Enable (CE pin) Setup when power supplies are turned on

This IC is reset when CE pin is input to low level or when this IC is powered off. This IC should be reset in the following case.

- I2CADR, or GVIFID setting is changed.
- The setting of signal assignment of shared pins is changed.

For Desay

Other Sequence Restriction

Item	Symbol	Min.	Typ.	Max.	Unit	Remarks
Wait time for the wake up	Twait_START	10	—	—	ms	
Wait time for the register setting activation (Serializer)	Twait _VALID_SER	10	—	—	ms	
Wait time for the register setting activation (Deserializer)	Twait_FS	10 ms + 2 frame	—	—	—	
Wait time for SYNC signal transmission activation (Serializer)	Twait _VALID _SYNC	10 ms + 2 frame	—	—	—	

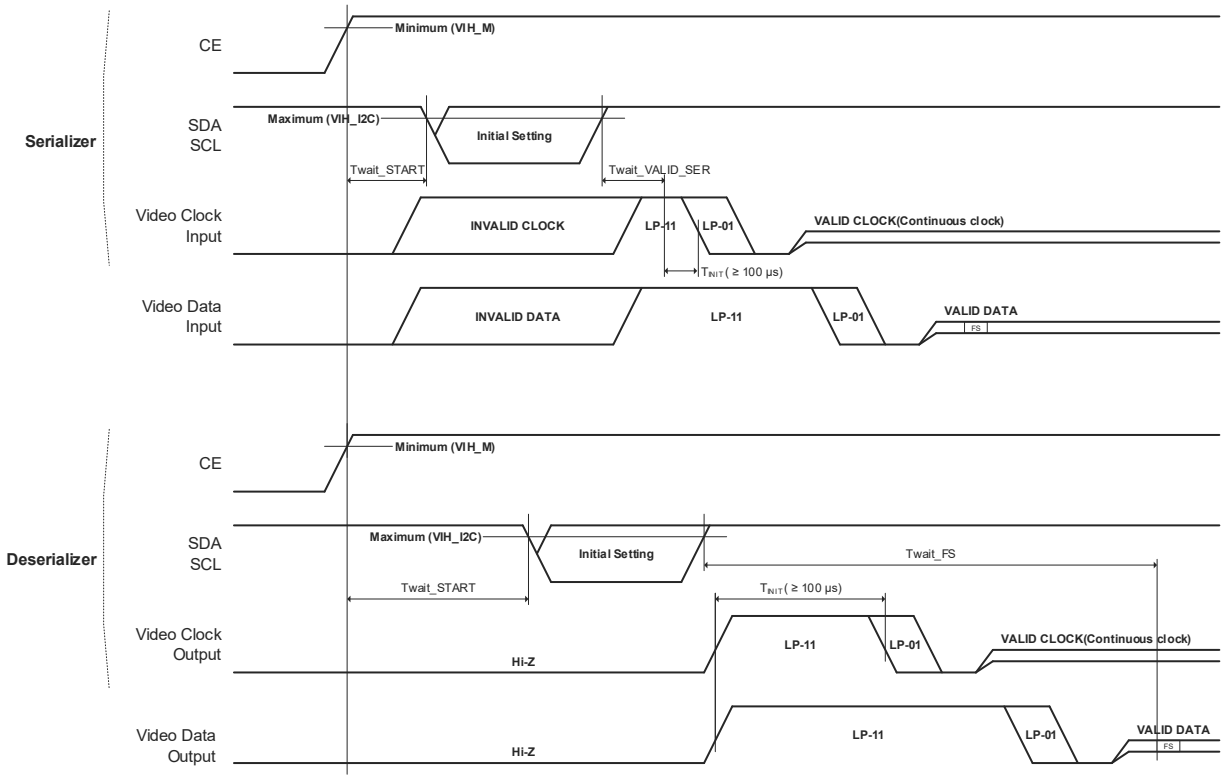

Fig. 10 Other Sequence Restriction 1

For Desay

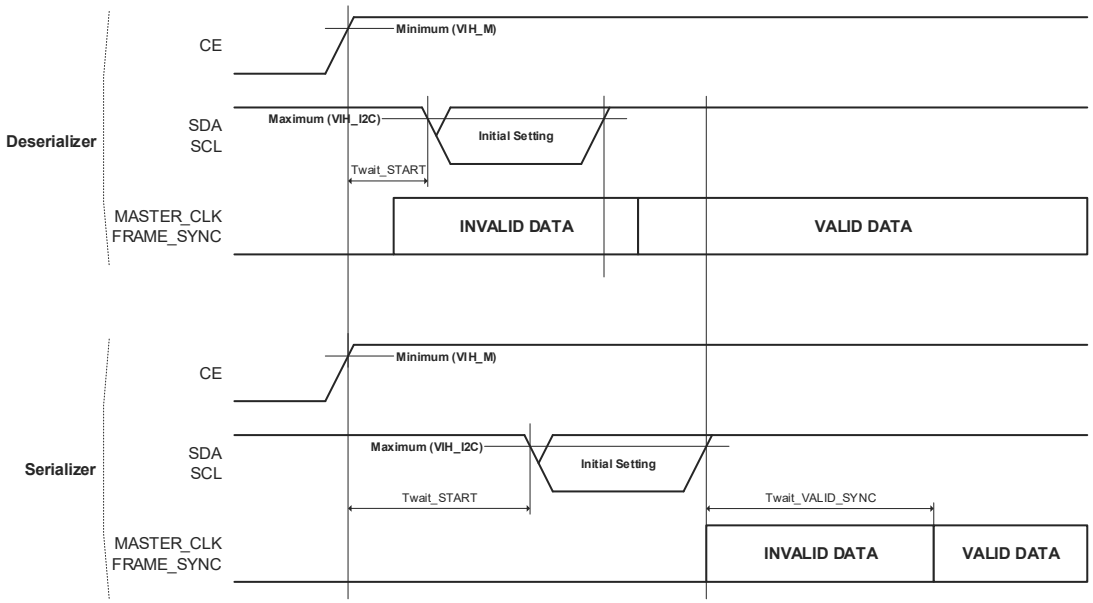

Fig. 11 Other Sequence Restriction 2

When the I^{2}C interface is used for the Aux port, the wait time from the completion of the AUX_*_I2C_ENABLE register setting to the validation of Aux data transmission is not required to be more than Twait_VALID_*. Exceptionally, it should be more than 30 µs.

For Desay

Description of Functions and Operation 1

Overview

GVIF3 serializer and deserializer can transmit the high speed video signals the sync signals for image sensor and the low speed Aux / GPIO signals over one differential shielded twisted-pair cable or coaxial cable.

GVIF3 serializers and deserializer are designed to use with the GVIF2 and GVIF3 chipset.

The high speed video signals can be transmitted from a serializer to a deserializer, and the sync signals for image sensor can be transmitted from deserializer to serializer. The Aux / GPIO signals can be transmitted bi-directionally and simultaneously.

The data transmission from a GVIF3 transmitter to a GVIF3 receiver is called “stream” in this specification. The direction of the video data transmission is called “downstream” and the reverse direction is called “upstream”.

The data rate of a GVIF3 transmitter is fixed and can be selected by register.

The deserializer extracts the video data from the received GVIF2 or GVIF3 signals, recovers the video clock automatically and outputs them.

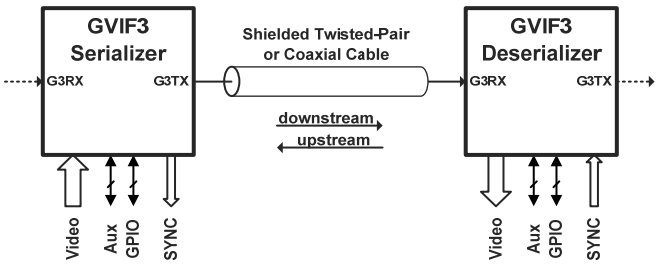

Fig. 12 The Concept Figure of System

Some of GVIF3 devices have the GVIF3 transmitter port and receiver port, the daisy chain can be consisted by connecting these ports to other GVIF2 and GVIF3 devices.

The link at the GVIF3 transmitter / receiver must be established normally for all transmissions to be valid

For Desay

Video Transmission

Video Stream Multiplexing

Serializer can multiplex the input video data onto the video stream which is transmitted from upstream GVIF devices.

The video stream GVIFID and slots are assigned to each video stream which is transmitted from each GVIF3 transmitter.

Serializer transmits the video data from upstream to downstream via GVIF3 transmitter.

Video Stream Demultiplexing

By selecting the video stream GVIFID, deserializer can demultiplex the video stream from multiplexed video streams which are received at each GVIF3 receiver and output the demultiplexed video stream.

When the video stream is demultiplexed, the total output data size is the same as the data size of the selected video streams.

Deserializer transmits all video data from upstream which are received at GVIF3 receivers to downstream via GVIF3 transmitter.

By setting the GVIF3RX*_DROP_SOURCE_DATA_GVIFID_* registers and the DAISY_GVIF3TRX*_SELECT registers, some of the video data can be deleted or selected from the video data which are transmitted to downstream.

Slot

Multiple signal channels are time-division multiplexed in the GVIF3 interface. The video signals are transmitted in the high speed downstream channel of these channels. This channel is divided into slots. The each slot has the fixed bandwidth of 30 Mbytes/s. The number of slots is varied depending on the speed setting of the GVIF3 port. For example, the number of slots is 16 slots for 4.8 Gbps mode.

When the video input is the LVDS (OpenLDI) / eDP interface and the system clocks are input externally, a pixel data are transmitted by 3 Bytes. 1 slot per 10 MHz pixel clock is needed. For example, 8 slots are needed for the transmission of LVDS (OpenLDI) video signals at 80 MHz pixel clock rate.
When the system clocks are not input externally, 1 slot per 9 MHz pixel clock rate is needed.

When the video input is MIPI interface and the system clocks are input externally, 1 slot per 240 Mbps which is total data rate of all lanes is needed. For example, 8 slots are needed for the transmission of 4 lanes data at 480Mbps/lane.
When the system clocks are not input externally, 1 slot per 216 Mbps which is total data rate of all lanes is needed.

Aux Port

For the Aux data transmission, the I^2C interface is supported. As the Aux port is shared with all of streams, all of the Aux interfaces must be the same in the GVIF3 devices which use the Aux port in the stream.

For Desay

I²C Interface

When the I²C interface is used for the Aux port, SDA and SCL pins of all GVIF2 and GVIF3 devices whose I²C interface is enabled are connected virtually. The multi master is not supported.

The electric characteristics conform to the NXP Semiconductors N.V I²C specification, I²C-bus specification and user manual UM10204 Rev.6. The IOL of Fast-mode Plus is the same as one of Fast-mode. The pull-up resistor should be set properly so that I²C specification is satisfied.

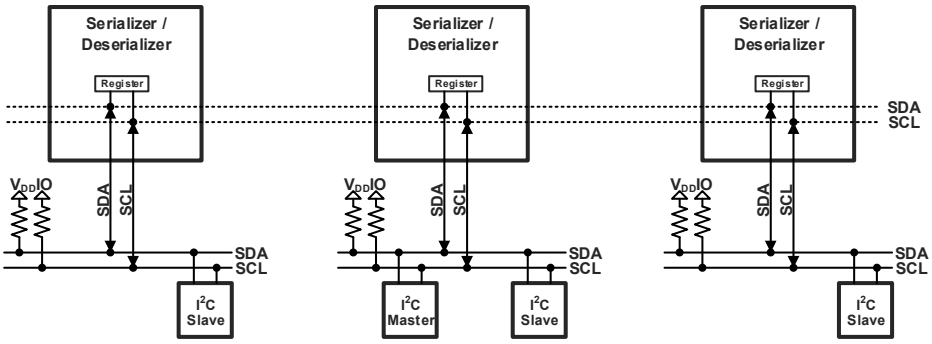

Fig. 13 Aux Port (I²C)

The Aux port connected to the I²C master device should be set the pseudo slave of Aux port by the AUX_I2C_PSEUDO_MASTER_DISABLE register which disables the pseudo master of Aux port.

The Aux port connected to the I²C slave device should be set the pseudo master of Aux port by the AUX_I2C_PSEUDO_SLAVE_DISABLE register which disables the pseudo slave of Aux port.

The Aux port (pseudo slave) which is accessed by the I²C master device adjusts the timing by the clock stretching in order to ensure matching the timing with the I²C slave device. The Aux port (pseudo master) supports the clock stretching by the I²C slave device to which the GVIF3 device accesses. When the clock stretching time excesses the time which is set by the AUX_*_I2C_TIMEOUT register, it is regarded as the bus error, and the GVIF3 device resets the status of the Aux data transmission. When the link is broken, it is also regarded as the bus error, and the GVIF3 device resets the status of the Aux data transmission. In reset, the I²C master of GVIF3 device goes to the STOP condition first, and it sends 9 clock pulses, and then it goes to the STOP condition again. The access during reset sequence is invalid and NACK can be output. The wait time must be more than 1 ms after I²C communication error occurs.

When the registers which are for link establishment are changed through the Aux port, the link can be broken and the access can be stopped, and then NACK can be output.

General call address is not supported.

Only one of Aux port should be enabled when there are multiple Aux ports of GVIF devices connected to the same I²C master devices

The tSU;STA minimum value of Standard-mode on the pseudo master of the Aux port is 2.7 µs.

The pseudo slave of the Aux port performs bit level clock stretching, therefore the I²C master must support bit level clock stretching.

The Aux port (pseudo slave) which is accessed by the I²C master device adjusts the timing by the clock stretching in order to ensure matching the timing with the I²C slave device. Therefore, the tVD;DAT may be more than maximum value as described in the I²C-bus specification and user manual UM10204 Rev.6. If the I²C slave device does not support the clock stretching, the I²C slave device must support the access which the tVD;DAT is more than or equal to maximum value (the tSU;DAT meets minimum value).

.

For Desay

GPIO Port

The GVIF3 device can transmit low speed GPIO signals in all streams. Virtual GPIO bus is constructed in a daisy chain. One of all connected GVIF2 and GVIF3 devices can drive the specified virtual GPIO bus.

SYNC Port

The master clock signal and frame sync signal, which are provided to image sensor, can be transmitted from a deserializer to an adjacent serializer. The kinds of signals which can be transmitted depend on each device.

The master clock signal which is input to the deserializer can be divided by the MASTER_CLK_DIVISION_RATIO register and transmitted. When the division ratio is set, the master clock frequency in FRAME_SYNC setup of the serializer should be equal to the divided master clock frequency

SYNC_ENABLE register of the deserializer must be set before SYNC_ENABLE register of the serializer is set.

Register Access Interface

The register can be accessed through SDA0 pin and SCL0 pin. The register cannot be accessed through the shared pins which are assigned for the SDA1 and SCL1 signals.

The slave address is set by I2CADR pin.

The register access interface does not use the clock stretching.

When the registers which are for link establishment are changed, the link can be broken and reset automatically. As the link is broken, all transmissions are stopped.

General call address is not supported.

The register consists of multiple banks.

Each bank can be accessed when its bank number is set to the address 0xFF. For example, the register of Bank 2 can be accessed when the value 0x02 is written in the address 0xFF.

The GVIF3 device which has no HDCP function does not have the registers of Bank 8 and Bank 9.

If the HDCP function is not used, there is no need to use the registers of Bank 8 and Bank 9.

When the registers of Bank 8 and Bank 9 are write-accessed (Write Stop), the next access must start after more than 5.5 ms from the write access. If the next access start within this waiting period, the I^2C bus returns NACK.

Please refer to the application note about the details of Bank 8 and Bank 9.

For Desay

Register Remote Access Function

The register of another connected GVIF2 and GVIF3 device in streams can be read and written by registers. Multiple GVIF2 and GVIF3 devices in streams cannot execute the register remote access function simultaneously. The register cannot be write-accessed from the register access interface and the register remote access function simultaneously.

When the registers which are for link establishment are changed through the register remote access, the link can be broken and the register remote access can be stopped, and then there can be no notification in the REMOTE_REGISTER_WRITE_COMPLETE register.

The time from the completion of write or read setting to the “ 1 ” assertion of the REMOTE_REGISTER_WRITE_COMPLETE register is 0.4 ms for the point to point connection, + 0.15 ms for 1 stage addition of daisy chain connection.

When a GVIF2 and GVIF3 device in streams execute the remote register access function and then another GVIF2 and GVIF3 device in streams execute the remote register access function, the wait time of remote register access function must be more than 0.5 ms × (Number of connected GVIF2 and GVIF3 devices in stream).

By the register remote access function, the register of only Bank 0 in GVIF2 device can be accessed from GVIF3 device or the register of only Bank 0 in GVIF3 device can be accessed from GVIF2 device.

The register of all banks in GVIF3 device can be accessed from GVIF3 device.

The registers of Bank 8 and Bank 9 can be read-accessed only.

I2CADR Pin Setup

The slave address for the register access interface is determined by 7 bits. The MSB 3 bits of them are fixed value, “ 010 ”. The LSB 4 bits of them should be set by I2CADR pin.

I2CADR pin should be set with registers as follows.

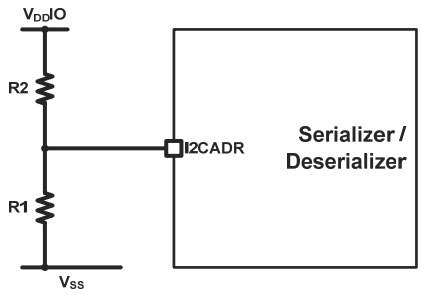

Fig. 14 I2CADR pin Setup

For Desay

Table 1 The Setting Value of Resistor for I2CADR and GVIFID pin

LSB 4 bits	R1 (kΩ)	R2 (kΩ)
0000	10	OPEN
0001	1.2	7.5
0010	2	6.8
0011	3.9	8.2
0100	3.9	5.6
0101	4.7	4.7
0110	6.8	4.7
0111	8.2	3.9
1000	8.2	2.4
1001	9.1	1.5
1010	OPEN	10

Note that the resistance tolerance should be ±1 %.
R1 for "0000" and R2 for "1010" can have a resistance tolerance of +/- 5%.

The MSB 3 bits of slave address for the safety mechanism register are fixed value, “ 011 ”.

GVIFID Pin Setup

The GVIFID is used to identify the serializer and the deserializer. The GVIFID is 8 bits. The LSB 4 bits are the logical value of GVIFID pin.

The GVIFID pin should be set by resistors same as I2CADR pin.

For the daisy chain connection, The LSB 4 bits of GVIFID should be set to the different value in GVIF devices which are within the range of the video transmission, audio transmission, register remote access

The video stream GVIFID should be set by register. For the daisy chain connection, the video stream GVIFID should be set to the different value in GVIF devices which are within the range of the video transmission.

Table 2 The MSB 4 bits of GVIFID

Product	MSB 4 bits
GVIF3 serializer	0001
GVIF3 deserializer	0011
CXD4931GG-W / CXD4951GG-W CXD4933AGG-W / CXD4953GG-W	0000
CXD4930AGG-W / CXD4950GG-W CXD4932AGG-W / CXD4952GG-W CXD4934AGG-W / CXD4954GG-W	1000
CXD4961ER-W CXD4963ER-W CXD4963GG-W	0100
CXD4960ER-W CXD4960GG-W CXD4962ER-W	0110
CXD4968ER-W	0010

For Desay

CMOS Logic Interface

By applying 1.8 V or 3.3 V to V_{DD}IO, CMOS logic interface for 1.8 V or 3.3 V are supported. All CMOS logic interface pins are specified to have the same interface.

INTERRUPT Signal and Register

The interrupt notification is indicated by INTERRUPT signal and register. INTERRUPT signal can be assigned to GENERAL_IO[*:0] pin.

The item which is output to INTERRUPT signal and register can be selected by registers. The logical value of INTERRUPT signal and register can be cleared by registers.

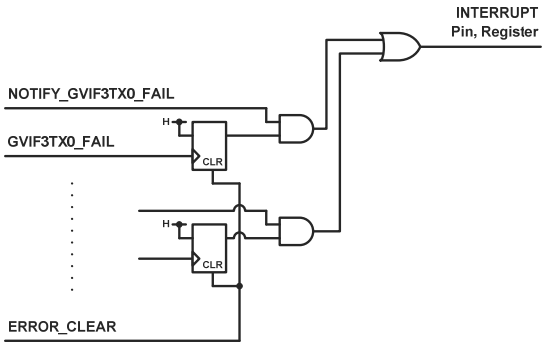

Fig. 15 Relation among Error Status Monitor - * register, Interrupt Setup - * register and INTERRUPT pin / register

For Desay

Description of Functions and Operation 2 (CXD4984ER-W)

Video Port

The CXD4984ER-W has MIPI D-PHY / C-PHY CSI-2 interface for video output. When only 1 port is used, MIPITX0_* pins must be used.

MIPI D-PHY CSI-2 Interface

The pin assignment of MIPI data / clock differential output pin, the clock output (1 lane) and the data outputs (4 lane), is as follows.

Table 3 MIPI D-PHY CSI-2 Clock and Data Pin Assignment (Port0)

Clock Mode (MIPI_TX0_CLK_MODE)		2
Data Mode (MIPI_TX0_DATA_MODE)		1
D04xP, D04xN	—	—
D040P, D040N	Sub Port 0	Data (channel 0)
D041P, D041N		Data (channel 1)
D04CP, D04CN		Clock
D042P, D042N		Data (channel 2)
D043P, D043N		Data (channel 3)

Clock Mode (MIPI_TX0_CLK_MODE)		1
Data Mode (MIPI_TX0_DATA_MODE)		0
D04xP, D04xN	Sub Port 1	Data (channel 0)
D040P, D040N		Clock
D041P, D041N		Data (channel 1)
D04CP, D04CN	Sub Port 0	Data (channel 1)
D042P, D042N		Clock
D043P, D043N		Data (channel 0)

For Desay

Table 4 MIPI D-PHY CSI-2 Clock and Data Pin Assignment (Port1)

Clock Mode (MIPI_TX1_CLK_MODE)		2
Data Mode (MIPI_TX1_DATA_MODE)		1
D14xP, D14xN	—	—
D140P, D140N	Sub Port 2	Data (channel 0)
D141P, D141N		Data (channel 1)
D14CP, D14CN		Clock
D142P, D142N		Data (channel 2)
D143P, D143N		Data (channel 3)

Clock Mode (MIPI_TX1_CLK_MODE)		1
Data Mode (MIPI_TX1_DATA_MODE)		0
D14xP, D14xN	Sub Port 3	Data (channel 0)
D140P, D140N		Clock
D141P, D141N		Data (channel 1)
D14CP, D14CN	Sub Port 2	Data (channel 1)
D142P, D142N		Clock
D143P, D143N		Data (channel 0)

MIPI Alliance Specification for D-PHY Version 2.1 compliant.

MIPI Alliance Specification for CSI-2 Version 2.1 compliant.

Only the continuous clock mode is supported. The ULPS is not supported.

Only unidirectional Data Lanes are supported.

The following formats are supported in MIPI D-PHY CSI-2 without the frame extended mode.

- RGB888 (Data Type : 24h)
- YCbCr422 (YUV) (Data Type: 1Eh)
- RAW8 (Data Type: 2Ah)
- RAW10 (Data Type: 2Bh)
- RAW12(Data Type: 2Ch)
- RAW16 (Data Type: 2Eh)
- RAW20 (Data Type: 2Fh)

Except for RAW10, the number of data in line of the valid pixel region must be even.
For RAW10, the number of data in line of the valid pixel region must be a multiple of 4.

The number of data in line of the valid pixel region must be same.

For Desay

When the interface of video port in serializer which transmits the video stream is MIPI D-PHY CSI-2 interface, in video input of serializer, the time interval between Frame Start and Packet Header must be more than 1 μs. The time interval between Packet Footer and Packet Header must be more than 1 μs × (The number of Virtual Channel Multiplexing with line-interleave format in deserializer). The time interval between Frame End and Frame Start must be more than 2 μs × (The number of Virtual Channel Multiplexing with line-interleave format in deserializer).

When the interface of video port in serializer which transmits the video stream is MIPI D-PHY DSI interface, in video input of serializer, the time interval between V Sync End and Packet Header of Long Packet must be more than 1 μs. The time interval between Packet Footer of Long Packet and Packet Header of Long Packet must be more than 1 μs × (The number of Virtual Channel Multiplexing with line-interleave format in deserializer). The time interval between V Sync Start and V Sync End must be more than 2 μs × (The number of Virtual Channel Multiplexing with line-interleave format in deserializer).

When the interface of video port in serializer which transmits the video stream is LVDS (OpenLDI) interface, in video input of serializer, the time interval between the edge of VSYNC signal and the rising edge of DE signal must be more than 1 μs. The time interval between the falling to rising edge of DE signal must be more than 1 μs × (The number of Virtual Channel Multiplexing with line-interleave format in deserializer). The time interval between the edge of VSYNC signal must be more than 2 μs × (The number of Virtual Channel Multiplexing with line-interleave format in deserializer).

When the interface of video port in deserializer is MIPI D-PHY CSI-2 interface and the data rate exceeds 1500 Mbps / Lane, Periodic HS Skew Calibration Burst may be required in video output of deserializer.
When the interface of video port in serializer is MIPI D-PHY CSI-2 interface and serializer transmits the video stream with the Frame Extended Mode, the time interval between Frame End and Packet Headers of the next Long Packet must be more than 13 μs × (The number of Virtual Channel Multiplexing with line-interleave format in deserializer) in video input of serializer. Then Periodic HS Skew Calibration Burst will be inserted between Frame End and Frame Start in video output of deserializer, but it may not be inserted depending on the timing of Frame End of each video stream.
When SYNC signal is transmitted in High Accuracy Mode and the input data of each serializer is synchronized, Periodic HS Skew Calibration Burst will be inserted between Frame End and Frame Start.

For the continuous clock mode, the MIPI receiver device must be started up and activated before the deserializer starts outputting the MIPI clock signal. The VIDEO_OUTPUT_ENABLE_* register must be set to “ 0 ” before the MIPI receiver device is started up and activated, and then the VIDEO_OUTPUT_ENABLE_* register must be set to “ 1 ” after the MIPI receiver device is started up and activated.

The VIDEO_OUTPUT_ENABLE_* register must be set to “ 1 ” after setting the registers related to video transmission, and it must be set to “ 0 ” before changing the registers related to video transmission.

For Desay

MIPI D-PHY Global Operation Timing Parameter Setup

Global Operation Timing parameter should be set by registers to satisfy the following equations.

When MIPITX half rate mode is not used, or when only one sub port is used, Global Operation Timing parameter should be set to the same value in sub ports of the same port.

DR: MIPI D-PHY data rate (Mbps / Lane)

roundup( ): the function of rounding up digits after a decimal point.

MPX: 1 (when MIPITX half rate mode is not used), 2 (when MIPITX half rate mode is used)

$$TLPX_DATA = roundup\left(\frac{12}{1600} \times DR \times MPX\right)$$

$$TLPX_CLK = TLPX_DATA + 1$$

$$TCLK_PREPARE1 = roundup\left(\left(65 \times \left(\frac{DR \times MPX}{16000}\right) + 0.4\right) \times 8\right)$$

$$TCLK_PREPARE2 = roundup\left(570 \times \left(\frac{DR \times MPX}{16000}\right)\right)$$

$$THS_EXIT = roundup\left(\frac{DR \times MPX}{160}\right) \qquad \left(roundup\left(\frac{DR \times MPX}{160}\right) \geq 3\right)$$

$$= 3 \qquad \left(roundup\left(\frac{DR \times MPX}{160}\right) < 3\right)$$

$$THS_ZERO = roundup\left(\left(\left(\frac{10000}{DR} + 190 - (0.125 \times THS_PREPARE - 0.4) \times \left(\frac{16000}{DR \times MPX}\right)\right) \times \left(\frac{DR \times MPX}{16000}\right) - 0.4\right) \times 2\right)$$

The Bit0 of THS_ZERO parameter should be set to the same value as the Bit2 of THS_PREPARE when the Preamble Sequence is not used.

The Bit0 of THS_ZERO parameter should be set to “ 1 ” when the Preamble Sequence is used.

When MIPITX half rate mode is not used,

$$THS_TRAIL = roundup\left(\left(\left(\frac{4000}{DR} + 70\right) \times \left(\frac{DR \times 1}{16000}\right) + 0.373\right) \times 8\right)$$

$$THS_PREPARE = roundup\left(\left(\left(\frac{4000}{DR} + 70\right) \times \left(\frac{DR \times 1}{16000}\right) + 0.4\right) \times 8\right)$$

$$TCLK_TRAIL = roundup\left(\left(74 \times \left(\frac{DR \times 1}{16000}\right) + 0.4\right) \times 8\right)$$

For Desay

When MIPITX half rate mode is used,

$$THS_TRAIL = roundup\left(\left(\left(\frac{4000}{DR} + 80\right) \times \left(\frac{DR \times 2}{16000}\right) + 0.373\right) \times 8\right)$$

$$THS_PREPARE = roundup\left(\left(\left(\frac{4000}{DR} + 66\right) \times \left(\frac{DR \times 2}{16000}\right) + 0.4\right) \times 8\right)$$

$$TCLK_TRAIL = roundup\left(\left(74 \times \left(\frac{DR \times 2}{16000}\right) + 0.4\right) \times 8\right)$$

For Desay

MIPI C-PHY CSI-2 Interface

The pin assignment of MIPI data output pin, the data outputs (3 lane), is as follows.

Table 5 MIPI C-PHY CSI-2 Data Pin Assignment (Port0)

C-PHY Data Mode (MIPI_TX0_CPHY_DATA_MODE)			0 (10)
D04xP	Port 0	—	—
D04xN			—
D040P			—
D040N		Sub Port 0 Data (Channel 2)	C
D041P			B
D041N			A
D04CP		Sub Port 0 Data (Channel 1)	C
D04CN			B
D042P			A
D042N		Sub Port 0 Data (Channel 0)	C
D043P			B
D043N			A

C-PHY Data Mode (MIPI_TX0_CPHY_DATA_MODE)			1 (11)
D04xP	Port 0	—	—
D04xN			—
D040P			—
D040N		Sub Port 1 Data (Channel 0)	C
D041P			B
D041N			A
D04CP		Sub Port 0 Data (Channel 1)	C
D04CN			B
D042P			A
D042N		Sub Port 0 Data (Channel 0)	C
D043P			B
D043N			A

For Desay

Table 6 MIPI C-PHY CSI-2 Data Pin Assignment (Port1)

C-PHY Data Mode (MIPI_TX11_CPHY_DATA_MODE)			0 (10)
D14xP	Port 1	—	—
D14xN			—
D140P			—
D140N		Sub Port 2 Data (Channel 2)	C
D141P			B
D141N			A
D14CP		Sub Port 2 Data (Channel 1)	C
D14CN			B
D142P			A
D142N		Sub Port 2 Data (Channel 0)	C
D143P			B
D143N			A

C-PHY Data Mode (MIPI_TX1_CPHY_DATA_MODE)			1 (11)
D14xP	Port 1	—	—
D14xN			—
D140P			—
D140N		Sub Port 3 Data (Channel 0)	C
D141P			B
D141N			A
D14CP		Sub Port 2 Data (Channel 1)	C
D14CN			B
D142P			A
D142N		Sub Port 2 Data (Channel 0)	C
D143P			B
D143N			A

MIPI Alliance Specification for C-PHY Version 1.2 compliant.

MIPI Alliance Specification for CSI-2 Version 2.1 compliant.

Only unidirectional Data Lanes are supported.

The following formats are supported in MIPI D-PHY CSI-2 without the frame extended mode.

- RGB888 (Data Type : 24h)
- YCbCr422 (YUV) (Data Type: 1Eh)
- RAW8 (Data Type: 2Ah)
- RAW10 (Data Type: 2Bh)
- RAW12(Data Type: 2Ch)
- RAW16 (Data Type: 2Eh)
- RAW20 (Data Type: 2Fh)

For Desay

Except for RAW10, the number of data in line of the valid pixel region must be even.
For RAW10, the number of data in line of the valid pixel region must be a multiple of 4.

The number of data in line of the valid pixel region must be same.

When the interface of video port in serializer which transmits the video stream is MIPI D-PHY CSI-2 interface, in video input of serializer, the time interval between Frame Start and Packet Header must be more than “ Packet Interval 1 ” shown in table below. The time interval between Packet Footer and Packet Header must be more than “ Packet Interval 1 ” × (The number of Virtual Channel Multiplexing with line-interleave format in deserializer). The time interval between Frame End and Frame Start must be more than “ Packet Interval 1 ” × 2 × (The number of Virtual Channel Multiplexing with line-interleave format in deserializer).

When the interface of video port in serializer which transmits the video stream is MIPI D-PHY DSI interface, in video input of serializer, the time interval between V Sync End and Packet Header of Long Packet must be more than “ Packet Interval 1 ” shown in table below. The time interval between Packet Footer of Long Packet and Packet Header of Long Packet must be more than “ Packet Interval 1 ” × (The number of Virtual Channel Multiplexing with line-interleave format in deserializer). The time interval between V Sync Start and V Sync End must be more than “ Packet Interval 1 ” × 2 × (The number of Virtual Channel Multiplexing with line-interleave format in deserializer).

When the interface of video port in serializer which transmits the video stream is LVDS (OpenLDI) interface, in video input of serializer, the time interval between the edge of VSYNC signal and the rising edge of DE signal must be more than “ Packet Interval 1 ” shown in table below. The time interval between the falling to rising edge of DE signal must be more than “ Packet Interval 1 ” × (The number of Virtual Channel Multiplexing with line-interleave format in deserializer). The time interval between the edge of VSYNC signal must be more than “ Packet Interval 1 ” × 2 × (The number of Virtual Channel Multiplexing with line-interleave format in deserializer).

When the interface of video port in deserializer is MIPI C-PHY CSI-2 interface and the data rate exceeds 3000 Msps / Lane, Calibration may be required in video output of deserializer.
"Packet Interval 1" shown in Table below is calculated with the minimum calibration length case, so the required packet interval may increase depending on the calibration length requested by the connected MIPI C-PHY receiver. In this case, it should be added the calibration length increased by the register setting to the "Packet Interval 1".

Table 7 MIPI C-PHY CSI-2 Packet Interval

Data rate (Msps / Lane)	Packet Interval 1 (μs)
300 ≤ Data rate < 448	2.25 (TBD)
448 ≤ Data rate < 672	1.6 (TBD)
672 ≤ Data rate < 896	1.2 (TBD)
896 ≤ Data rate < 1120	0.9 (TBD)
1120 ≤ Data rate < 1344	0.8 (TBD)
1344 ≤ Data rate < 1568	0.7 (TBD)
1568 ≤ Data rate < 1792	0.6 (TBD)
1792 ≤ Data rate < 2016	0.6 (TBD)
2016 ≤ Data rate < 2240	0.6 (TBD)
2240 ≤ Data rate < 2464	0.5 (TBD)
2464 ≤ Data rate < 2688	0.5 (TBD)
2688 ≤ Data rate < 2912	0.5 (TBD)
2912 ≤ Data rate < 3136	0.4 + Calibration (TBD)

For Desay

3136 ≤ Data rate < 3360	0.4 + Calibration (TBD)
3360 ≤ Data rate < 3584	0.4 + Calibration (TBD)
3584 ≤ Data rate < 3808	0.4 + Calibration (TBD)
3808 ≤ Data rate < 4032	0.4 + Calibration (TBD)
4032 ≤ Data rate < 4256	0.4 + Calibration (TBD)
4256 ≤ Data rate < 4480	0.4 + Calibration (TBD)
4480 ≤ Data rate ≤ 4500	0.4 + Calibration (TBD)

MIPI C-PHY Global Operation Timing Parameter Setup

Global Operation Timing parameter should be set by registers as following table.

Table 8 MIPI C-PHY CSI-2 Global Operation Timing parameter

Data rate (Msps / Lane)	MIPI_TX*_CPHY_T3_PREPARE	MIPI_TX*_CPHY_T3_PREBEGIN	MIPI_TX*_CPHY_T3_POST	MIPI_TX*_CPHY_T3_HS_EXIT	MIPI_TX*_CPHY_T3_LPX
300 ≤ Data rate < 448	000 0000 0011 (TBD)	000 0010 1001 (TBD)	000 0001 1111 (TBD)	000 0000 0111 (TBD)	000 0000 0011 (TBD)
448 ≤ Data rate < 672	000 0000 0101 (TBD)	000 0010 1001 (TBD)	000 0001 1111 (TBD)	000 0000 1001 (TBD)	000 0000 0101 (TBD)
672 ≤ Data rate < 896	000 0000 0111 (TBD)	000 0010 1001 (TBD)	000 0001 1111 (TBD)	000 0000 1101 (TBD)	000 0000 0111 (TBD)
896 ≤ Data rate < 1120	000 0000 1001 (TBD)	000 0010 1001 (TBD)	000 0001 1111 (TBD)	000 0000 1111 (TBD)	000 0000 1001 (TBD)
1120 ≤ Data rate < 1344	000 0000 1011 (TBD)	000 0010 1001 (TBD)	000 0001 1111 (TBD)	000 0001 0011 (TBD)	000 0000 1001 (TBD)
1344 ≤ Data rate < 1568	000 0000 1101 (TBD)	000 0010 1001 (TBD)	000 0001 1111 (TBD)	000 0001 0111 (TBD)	000 0000 1011 (TBD)
1568 ≤ Data rate < 1792	000 0000 1111 (TBD)	000 0010 1001 (TBD)	000 0001 1111 (TBD)	000 0001 1001 (TBD)	000 0000 1101 (TBD)
1792 ≤ Data rate < 2016	000 0001 0001 (TBD)	000 0010 1001 (TBD)	000 0001 1111 (TBD)	000 0001 1101 (TBD)	000 0000 1111 (TBD)
2016 ≤ Data rate < 2240	000 0001 0011 (TBD)	000 0010 1001 (TBD)	000 0001 1111 (TBD)	000 0001 1111 (TBD)	000 0001 0001 (TBD)
2240 ≤ Data rate < 2464	000 0001 0101 (TBD)	000 0010 1001 (TBD)	000 0001 1111 (TBD)	000 0010 0011 (TBD)	000 0001 0001 (TBD)
2464 ≤ Data rate < 2688	000 0001 0111 (TBD)	000 0010 1001 (TBD)	000 0001 1111 (TBD)	000 0010 0111 (TBD)	000 0001 0011 (TBD)
2688 ≤ Data rate < 2912	000 0001 1001 (TBD)	000 0010 1001 (TBD)	000 0001 1111 (TBD)	000 0010 1001 (TBD)	000 0001 0101 (TBD)

For Desay

2912 ≤ Data rate < 3136	000 0001 1011 (TBD)	000 0010 1001 (TBD)	000 0001 1111 (TBD)	000 0010 1101 (TBD)	000 0001 0111 (TBD)
3136 ≤ Data rate < 3360	000 0001 1101 (TBD)	000 0010 1001 (TBD)	000 0001 1111 (TBD)	000 0010 1111 (TBD)	000 0001 1001 (TBD)
3360 ≤ Data rate < 3584	000 0001 1111 (TBD)	000 0010 1001 (TBD)	000 0001 1111 (TBD)	000 0011 0011 (TBD)	000 0001 1001 (TBD)
3584 ≤ Data rate < 3808	000 0010 0001 (TBD)	000 0010 1001 (TBD)	000 0001 1111 (TBD)	000 0011 0111 (TBD)	000 0001 1011 (TBD)
3808 ≤ Data rate < 4032	000 0010 0011 (TBD)	000 0010 1001 (TBD)	000 0001 1111 (TBD)	000 0011 1001 (TBD)	000 0001 1101 (TBD)
4032 ≤ Data rate < 4256	000 0010 0101 (TBD)	000 0010 1001 (TBD)	000 0001 1111 (TBD)	000 0011 1101 (TBD)	000 0001 1111 (TBD)
4256 ≤ Data rate < 4480	000 0010 0111 (TBD)	000 0010 1001 (TBD)	000 0001 1111 (TBD)	000 0011 1111 (TBD)	000 0010 0001 (TBD)
4480 ≤ Data rate ≤ 4500	000 0010 1001 (TBD)	000 0010 1001 (TBD)	000 0001 1111 (TBD)	000 0100 0001 (TBD)	000 0010 0001 (TBD)

Data rate (Msps / Lane)	MIPI_TX*_CPHY_TWAKEUP	MIPI_TX*_CPHY_TINIT
300 ≤ Data rate < 448	0100 0001 1010 (TBD)	00 0110 1001 (TBD)
448 ≤ Data rate < 672	0100 0001 1010 (TBD)	00 0110 1001 (TBD)
672 ≤ Data rate < 896	0100 0001 1010 (TBD)	00 0110 1001 (TBD)
896 ≤ Data rate < 1120	0100 0001 1010 (TBD)	00 0110 1001 (TBD)
1120 ≤ Data rate < 1344	0100 0001 1010 (TBD)	00 0110 1001 (TBD)
1344 ≤ Data rate < 1568	0100 0001 1010 (TBD)	00 0110 1001 (TBD)
1568 ≤ Data rate < 1792	0100 0001 1010 (TBD)	00 0110 1001 (TBD)
1792 ≤ Data rate < 2016	0100 0001 1010 (TBD)	00 0110 1001 (TBD)
2016 ≤ Data rate < 2240	0100 0001 1010 (TBD)	00 0110 1001 (TBD)
2240 ≤ Data rate < 2464	0100 0001 1010 (TBD)	00 0110 1001 (TBD)
2464 ≤ Data rate < 2688	0100 0001 1010 (TBD)	00 0110 1001 (TBD)
2688 ≤ Data rate < 2912	0100 0001 1010 (TBD)	00 0110 1001 (TBD)
2912 ≤ Data rate < 3136	0100 0001 1010 (TBD)	00 0110 1001 (TBD)
3136 ≤ Data rate < 3360	0100 0001 1010 (TBD)	00 0110 1001 (TBD)
3360 ≤ Data rate < 3584	0100 0001 1010 (TBD)	00 0110 1001 (TBD)
3584 ≤ Data rate < 3808	0100 0001 1010 (TBD)	00 0110 1001 (TBD)
3808 ≤ Data rate < 4032	0100 0001 1010 (TBD)	00 0110 1001 (TBD)
4032 ≤ Data rate < 4256	0100 0001 1010 (TBD)	00 0110 1001 (TBD)
4256 ≤ Data rate < 4480	0100 0001 1010 (TBD)	00 0110 1001 (TBD)
4480 ≤ Data rate ≤ 4500	0100 0001 1010 (TBD)	00 0110 1001 (TBD)

For Desay

Initial Setup Sequence

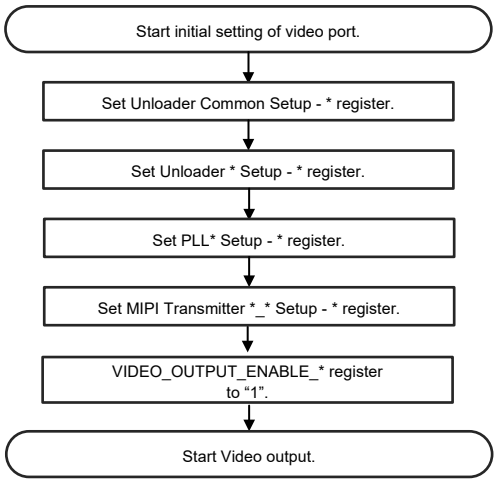

Fig. 16 MIPI D-PHY / C-PHY CSI-2 Initial Setup Sequence

For Desay

Video Transmission

The following figure shows the video data flow from GVIF3 port to video port.

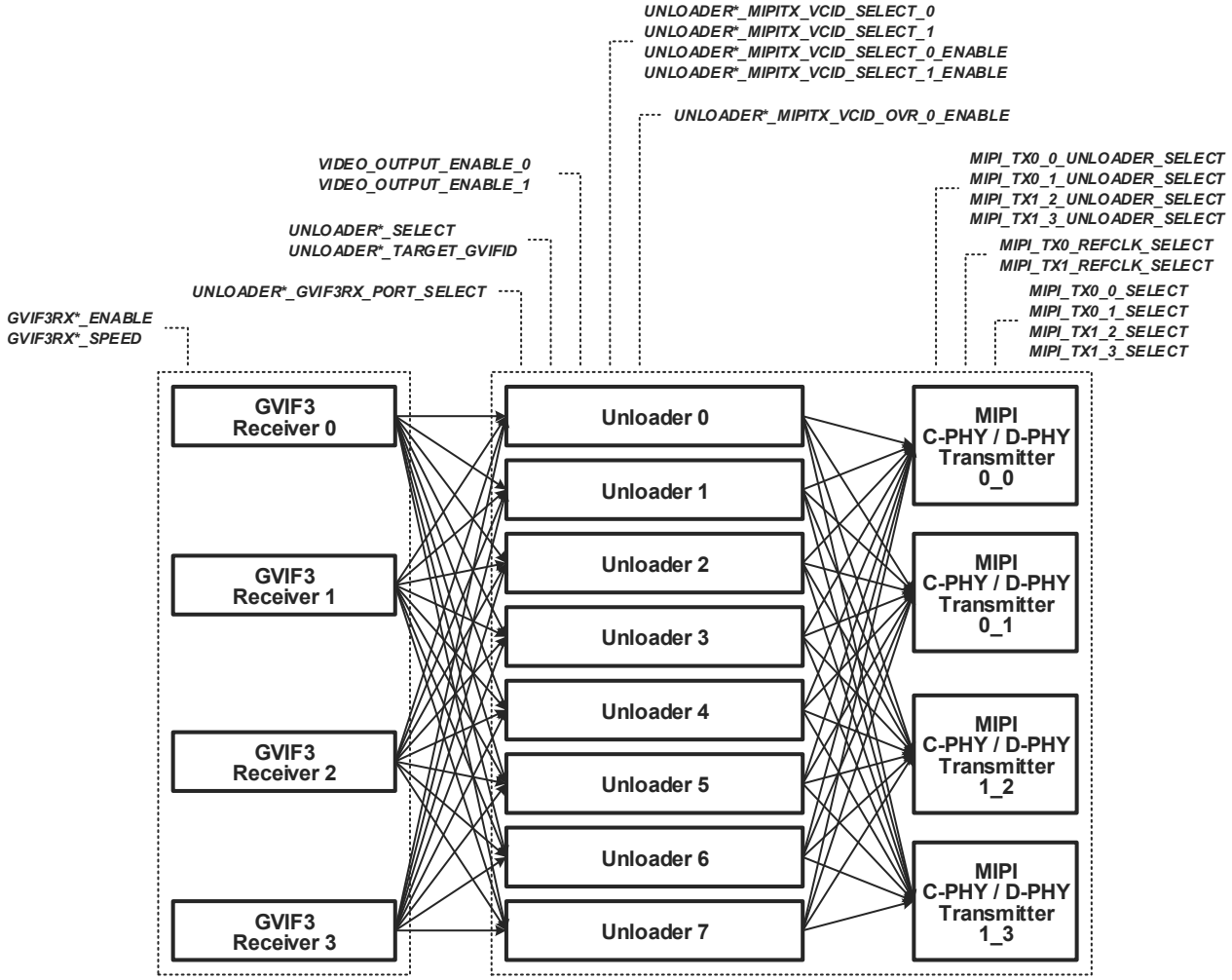

Fig. 17 Video Data Flow from GVIF3 Port to Video Port

The MIPI_TX0_0_SELECT, MIPI_TX0_1_SELECT, MIPI_TX1_2_SELECT and MIPI_TX1_3_SELECT registers select which sub ports of MIPI D-PHY transmitter are used.

The UNLOADER*_SELECT registers select which Unloaders are used.
The UNLOADER*_SELECT register of unused Unloaders should be set to “ 0 ”.

The UNLOADER*_GVIF3RX_PORT_SELECT registers select which GVIF3 receiver is connected to each Unloader.

The UNLOADER*_TARGET_GVIFID registers select one of the video streams which are input from GVIF3 receiver.

The MIPI_TX0_0_UNLOADER_SELECT, MIPI_TX0_1_UNLOADER_SELECT, MIPI_TX1_2_UNLOADER_SELECT and MIPI_TX1_3_UNLOADER_SELECT registers select which Unloaders are connected to each sub port of MIPI D-PHY Transmitter. Each of Unloaders can be connected to only one of sub ports.

MIPITX VCID SELECT Function

By setting the UNLOADER*_MIPITX_VCID_SELECT_0_ENABLE and UNLOADER*_MIPITX_VCID_SELECT_1_ENABLE registers, and by selecting Virtual Channel ID with the UNLOADER*_MIPITX_VCID_SELECT_0 and UNLOADER*_MIPITX_VCID_SELECT_1 registers, the video data of

For Desay

specified Virtual Channel ID (maximum 2 video data) can be extracted from the video stream which is selected at each Unloader. When these settings are not set, Virtual Channel ID of video data is output as it is.

It is necessary that the interface of video port in serializer which transmits the video stream is MIPI D-PHY CSI-2 interface and the frame extended mode is used.

The UNLOADER*_MIPITX_VCID_OVR_0_ENABLE register should be set to “ 0 ”.

The video data of Virtual Channel ID which is not selected are replaced with blank data.

When the video data is line-interleave format and the clock fixed mode of MIPI D-PHY Transmitter is used, the output clock frequency can be lowered according to the amount of extracted video data.

When the video data is frame-interleave format and the clock fixed mode of MIPI D-PHY Transmitter is used, the output clock frequency should be set according to the amount of original video data.

MIPITX VCID OVERRIDE Function

When only one video data of Virtual Channel ID is included in the video stream which is selected at each Unloader, Virtual Channel ID can be overridden by setting the UNLOADER*_MIPITX_VCID_OVR_0_ENABLE register to “ 1 ” and by selecting another Virtual Channel ID with the UNLOADER*_MIPITX_VCID_SELECT_0 register.

It is necessary that the interface of video port in serializer which transmits the video stream is MIPI D-PHY CSI-2 interface and the frame extended mode is used.

The UNLOADER*_MIPITX_VCID_SELECT_0_ENABLE and UNLOADER*_MIPITX_VCID_SELECT_1_ENABLE registers should be set to “ 0 ”.

When Virtual Channel ID is overridden by the MIPITX VCID OVERRIDE Function, The ECC value in Packet Header should be recalculated and replaced by setting the UNLOADER*_ECC_CRC_OVR_ENABLE register to “ 1 ”.

MIPITX VCID SELECT & OVERRIDE Function

By setting the UNLOADER*_MIPITX_VCID_SELECT_1_ENABLE registers to “ 1 ”, and by selecting Virtual Channel ID with the UNLOADER*_MIPITX_VCID_SELECT_1, and by setting the UNLOADER*_ECC_CRC_OVR_ENABLE register to “ 1 ”, and by setting the UNLOADER*_MIPITX_VCID_OVR_0_ENABLE register to “ 1 ”, and by selecting another Virtual Channel ID with the UNLOADER*_MIPITX_VCID_SELECT_0 register, the video data of specified Virtual Channel ID can be extracted from the video stream which is selected at each Unloader, and Virtual Channel ID can be overridden.

MIPITX VCID SETUP Function

When the interface of video port in serializer which transmits the video stream is not MIPI D-PHY CSI-2 interface or the frame extended mode is not used, the UNLOADER*_MIPITX_VCID_OVR_0_ENABLE register should be set to “ 1 ”, and Virtual Channel ID of video data should be set by the UNLOADER*_MIPITX_VCID_SELECT_0 register.
When these settings are not set, Virtual Channel ID of video data is set to " 0000 ".

The UNLOADER*_MIPITX_VCID_SELECT_0_ENABLE and UNLOADER*_MIPITX_VCID_SELECT_1_ENABLE registers should be set to “ 0 ”.

The UNLOADER*_ECC_CRC_OVR_ENABLE registers should be set to “ 1 ”.

For Desay

MIPITX Extra Virtual Channel ID Override Mode

By using the Extra Virtual Channel ID Override Mode, and by selecting up to 2 Virtual Channel ID, up to 2 video data of specified Virtual Channel ID can be extracted from the video stream which is selected at each Unloader, and up to 2 Virtual Channel ID can be overridden.

To use Extra Virtual Channel ID Override Mode, the UNLOADER*_MIPITX_EXTRA_VCID_OVR_MODE_ENABLE register should be set to "1".

By setting UNLOADER*_MIPITX_EXTRA_VCID_OVR_*_ENABLE registers to “ 1 ”, and by selecting Virtual Channel ID with the UNLOADER*_MIPITX_EXTRA_VCID_SELECT_*, and by setting the UNLOADER*_MIPITX_EXTRA_VCID_OVERRIDE_*, the video data of specified Virtual Channel ID can be extracted from the video stream which is selected, and Virtual Channel ID can be overridden.

This mode can be set at each Unloader.

When Virtual Channel ID is overridden by the Extra Virtual Channel ID Override Mode, The ECC value in Packet Header should be recalculated and replaced by setting the UNLOADER*_ECC_CRC_OVR_ENABLE register to “ 1 ”.

MIPITX Clock Fixed Mode

When multiple Unloaders are selected for one sub port, the video streams of selected Unloaders are combined into one video data with line-interleave format and output. (Virtual Channel Multiplexing)

The MIPI_TX*_CLK_FIXED_MODE register selects the clock fixed mode of MIPI D-PHY Transmitter.

The output clock frequency should be set by the MIPI_TX*_CLK_FIXED_MODE_ENABLE_0, MIPI_TX*_CLK_FIXED_MODE_ENABLE_1, MIPI_TX*_CLK_FIXED_MODE_PLL_VALUE and MIPI_TX*_CLK_FIXED_MODE_FREQ_RANGE registers.

It is necessary that the output clock frequency is more than the frequency for the largest amount of video data which are output from each sub port.

It is necessary that the interface of video port in serializer which transmits the video stream is MIPI D-PHY CSI-2 interface.

The data rate when the clock fixed mode of MIPI C-PHY Transmitter is calculated as following equation.

$$MIPI\ C\text{-}PHY\ data\ rate\ [Msps\ /\ Lane] = \frac{MIPI\ D\text{-}PHY\ data\ rate\ [Mbps\ /\ Lane] \times 7\ [symbol] \times MIPI\ D\text{-}PHY\ data\ lane\ number}{16\ [bit] \times MIPI\ C\text{-}PHY\ data\ lane\ number}$$

MIPITX Clock Regenerated Mode

When one Unloader is selected for one sub port, the video stream of selected Unloader is output from sub port.

The MIPI_TX*_CLK_FIXED_MODE register selects the clock regenerated mode of MIPI D-PHY Transmitter.

In Unloaders which are connected to each sub port, the MIPI_TX*_REFCLK_SELECT register selects Unloader which has the largest amount of video data in video stream as the supply source of the reference clock for MIPI D-PHY Transmitter.

MIPITX Half Rate Mode

The output clock frequency for Sub port 1 of Port 0 can be half of that for Sub port 0 of Port 0.

The output clock frequency for Sub port 3 of Port 1 can be half of that for Sub port 2 of Port 1.

The clock fixed mode should be set, and the half rate mode should be set by the MIPI_TX*_HALFRATE_MODE_ENABLE, MIPI_TX0_1_HALFRATE_MODE_ENABLE and MIPI_TX1_3_HALFRATE_MODE_ENABLE registers.

For Desay

Signal Assignment of Shared Pins

Some pins are shared with multiple signals. Signal can be assigned to pin by registers.

Table 9 Signal Description

Signal Name	Symbol	Description
MASTER_CLK	M	Master clock signal which is provided to image sensor.
FRAME_SYNC	F	Frame sync signal which is provided to image sensor.
INTERRUPT	I	Interrupt output signal.
READY	R	READY output signal
AUX*	A*	Aux signal (I^2C) which is transmitted between serializer and deserializer. AUX0: SCL1 AUX1: SDA1
GPIO*	G*	GPIO signal which is transmitted between serializer and deserializer.
REG_GPIO*	R*	GPIO signal which is input to register or output from register.
SM*	S*	Safety mechanism signal.

Table 10 Signal Assignment of Safety Mechanism

Pin	The case in which shared pin is not assigned for safety mechanism	The case in which shared pin is assigned for safety mechanism
EXT_SM_FAULT	EXT_SM_FAULT_X_IN	EXT_SM_FAULT_X
SM_FAULT_X	SM_FAULT_X	SM_FAULT_X
Shared Pin (SM0)	—	EXT_SM_FAULT_X _IN
Shared Pin (SM1)	—	EXT_SM_FAULT_X_IN1

For Desay

Table 11 Register setting and Signal Assignment 1

Register								Pin No. and Signal Assignment				
IO_ENABLE	IO_MASTER_CLK_SELECT	IO_FRAME_SYNC_SELECT	IO_INTERRUPT_SELECT	IO_READY_SELECT	IO_AUX_I2C_SELECT	IO_SM1_SELECT	IO_SM0_SELECT	20	21	23	24	25
1	0	0	0	0	0	0	0	G0	G1	G2	G3	R0
1	1	0	0	0	0	0	0	M	G0	G1	G2	G3
1	0	1	0	0	0	0	0	F	G0	G1	G2	G3
1	1	1	0	0	0	0	0	M	F	G0	G1	G2
1	0	0	1	0	0	0	0	I	G0	G1	G2	G3
1	1	0	1	0	0	0	0	M	I	G0	G1	G2
1	0	1	1	0	0	0	0	F	I	G0	G1	G2
1	1	1	1	0	0	0	0	M	F	I	G0	G1
1	0	0	0	1	0	0	0	R	G0	G1	G2	G3
1	1	0	0	1	0	0	0	M	R	G0	G1	G2
1	0	1	0	1	0	0	0	F	R	G0	G1	G2
1	1	1	0	1	0	0	0	M	F	R	G0	G1
1	0	0	1	1	0	0	0	I	R	G0	G1	G2
1	1	0	1	1	0	0	0	M	I	R	G0	G1
1	0	1	1	1	0	0	0	F	I	R	G0	G1
1	1	1	1	1	0	0	0	M	F	I	R	G0
1	0	0	0	0	1	0	0	A0	A1	G0	G1	G2
1	1	0	0	0	1	0	0	M	A0	A1	G0	G1
1	0	1	0	0	1	0	0	F	A0	A1	G0	G1
1	1	1	0	0	1	0	0	M	F	A0	A1	G0
1	0	0	1	0	1	0	0	I	A0	A1	G0	G1
1	1	0	1	0	1	0	0	M	I	A0	A1	G0
1	0	1	1	0	1	0	0	F	I	A0	A1	G0
1	1	1	1	0	1	0	0	M	F	I	A0	A1
1	0	0	0	1	1	0	0	R	A0	A1	G0	G1
1	1	0	0	1	1	0	0	M	R	A0	A1	G0
1	0	1	0	1	1	0	0	F	R	A0	A1	G0
1	1	1	0	1	1	0	0	M	F	R	A0	A1
1	0	0	1	1	1	0	0	I	R	A0	A1	G0
1	1	0	1	1	1	0	0	M	I	R	A0	A1
1	0	1	1	1	1	0	0	F	I	R	A0	A1

For Desay

Table 6 Register setting and Signal Assignment 2

Register								Pin No. and Signal Assignment				
IO_ENABLE	IO_MASTER_CLK_SELECT	IO_FRAME_SYNC_SELECT	IO_INTERRUPT_SELECT	IO_READY_SELECT	IO_AUX_I2C_SELECT	IO_SM1_SELECT	IO_SM0_SELECT	20	21	23	24	25
1	0	0	0	0	0	0	*	G0	G1	G2	G3	S0
1	1	0	0	0	0	0	*	M	G0	G1	G2	S0
1	0	1	0	0	0	0	*	F	G0	G1	G2	S0
1	1	1	0	0	0	0	*	M	F	G0	G1	S0
1	0	0	1	0	0	0	*	I	G0	G1	G2	S0
1	1	0	1	0	0	0	*	M	I	G0	G1	S0
1	0	1	1	0	0	0	*	F	I	G0	G1	S0
1	1	1	1	0	0	0	*	M	F	I	G0	S0
1	0	0	0	1	0	0	*	R	G0	G1	G2	S0
1	1	0	0	1	0	0	*	M	R	G0	G1	S0
1	0	1	0	1	0	0	*	F	R	G0	G1	S0
1	1	1	0	1	0	0	*	M	F	R	G0	S0
1	0	0	1	1	0	0	*	I	R	G0	G1	S0
1	1	0	1	1	0	0	*	M	I	R	G0	S0
1	0	1	1	1	0	0	*	F	I	R	G0	S0
1	1	1	1	1	0	0	*	M	F	I	R	S0
1	0	0	0	0	1	0	*	A0	A1	G0	G1	S0
1	1	0	0	0	1	0	*	M	A0	A1	G0	S0
1	0	1	0	0	1	0	*	F	A0	A1	G0	S0
1	1	1	0	0	1	0	*	M	F	A0	A1	S0
1	0	0	1	0	1	0	*	I	A0	A1	G0	S0
1	1	0	1	0	1	0	*	M	I	A0	A1	S0
1	0	1	1	0	1	0	*	F	I	A0	A1	S0
1	0	0	0	1	1	0	*	R	A0	A1	G0	S0
1	1	0	0	1	1	0	*	M	R	A0	A1	S0
1	0	1	0	1	1	0	*	F	R	A0	A1	S0
1	0	0	1	1	1	0	*	I	R	A0	A1	S0

The “ * ” of the IO_SM0_SELECT and IO_SM1_SELECT registers in table above is “ 1 ”.

For Desay

Table 7 Register setting and Signal Assignment 3

Register								Pin No. and Signal Assignment				
IO_ENABLE	IO_MASTER_CLK_SELECT	IO_FRAME_SYNC_SELECT	IO_INTERRUPT_SELECT	IO_READY_SELECT	IO_AUX_I2C_SELECT	IO_SM1_SELECT	IO_SM0_SELECT	20	21	23	24	25
1	0	0	0	0	0	*	*	G0	G1	G2	S1	S0
1	1	0	0	0	0	*	*	M	G0	G1	S1	S0
1	0	1	0	0	0	*	*	F	G0	G1	S1	S0
1	1	1	0	0	0	*	*	M	F	G0	S1	S0
1	0	0	1	0	0	*	*	I	G0	G1	S1	S0
1	1	0	1	0	0	*	*	M	I	G0	S1	S0
1	0	1	1	0	0	*	*	F	I	G0	S1	S0
1	1	1	1	0	0	*	*	M	F	I	S1	S0
1	0	0	0	1	0	*	*	R	G0	G1	S1	S0
1	1	0	0	1	0	*	*	M	R	G0	S1	S0
1	0	1	0	1	0	*	*	F	R	G0	S1	S0
1	1	1	0	1	0	*	*	M	F	R	S1	S0
1	0	0	1	1	0	*	*	I	R	G0	S1	S0
1	1	0	1	1	0	*	*	M	I	R	S1	S0
1	0	1	1	1	0	*	*	F	I	R	S1	S0
1	0	0	0	0	1	*	*	A0	A1	G0	S1	S0
1	1	0	0	0	1	*	*	M	A0	A1	S1	S0
1	0	1	0	0	1	*	*	F	A0	A1	S1	S0
1	0	0	1	0	1	*	*	I	A0	A1	S1	S0
1	0	0	0	1	1	*	*	R	A0	A1	S1	S0

The “ * ” of the IO_SM0_SELECT and IO_SM1_SELECT registers in table above is “ 1 ”.

For Desay

System Clock Input

For the daisy chain connection, the video signal must satisfy the following.

- When the video input is the LVDS (OpenLDI) / eDP interface: 1 slot per 9 MHz pixel clock
- When the video input is MIPI interface: 1 slot per 216 Mbps which is total data rate of all lanes

And the system clocks should be input externally to GVIF devices between serializer in most upstream side and deserializer in most downstream side. When the serializer in most upstream side is CXD4963ER-W or CXD4963GG-W or CXD4967ER-W or CXD4965ER-W and the GVIF device between the serializer in most upstream side and deserializer in most downstream side is one deserializer and it is CXD4960ER-W or CXD4960GG-W or CXD4964ER-W or CXD4966ER-W or CXD4984ER-W, the system clock input is not needed.

The example of 6-stage daisy chain is shown in the following figure.

The system clocks which are input externally to GVIF3 devices between serializer in most upstream side and deserializer in most downstream side are f_sysclk1, f_sysclk2, f_sysclk3, f_sysclk4, respectively.

Each system clock must satisfy the following.

- 19 MHz < f_sysclk1, f_sysclk2, f_sysclk3, f_sysclk4 ≤ 20 MHz
- Frequency accuracy of f_sysclk1、f_sysclk2、f_sysclk3、f_sysclk4 < 100ppm

The external system clock input mode is set by registers.

Once the external system clock input mode is set, CE pin should be input to low level and IC should be reset in order to disable the external system clock input mode.

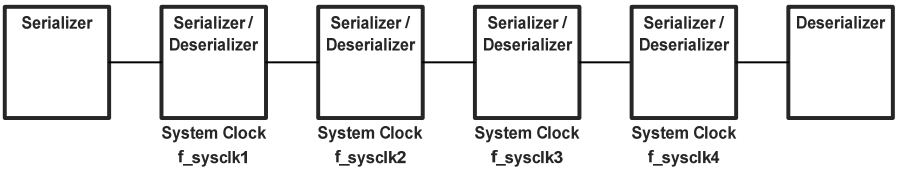

Fig. 18 The example of 6-stage Daisy Chain

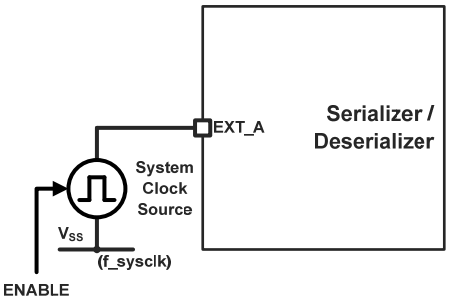

Fig. 19 System Clock Input Circuit

For Desay

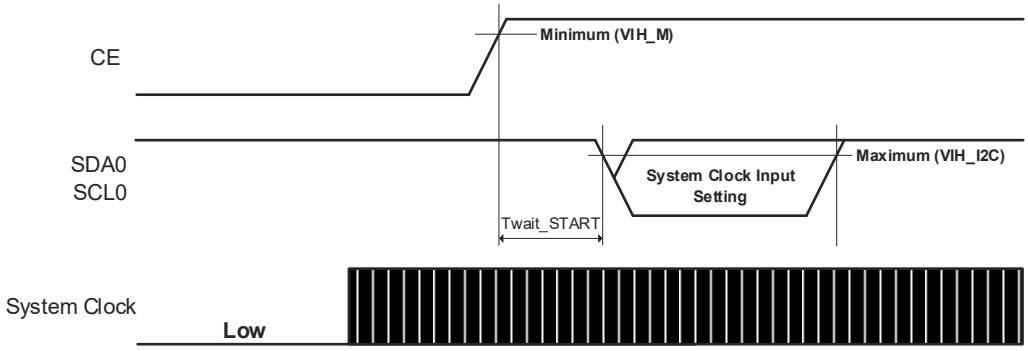

Fig. 20 Sequence Restriction of System Clock Input

Handling of Unused GVIF3 Port

When the serializer / deserializer of GVIF3 devices have both GVIF3 transmitter and GVIF3 receiver, GVIF3 receiver of the serializer / deserializer in the most upstream side of the stream and GVIF3 transmitter of the serializer / deserializer in the most downstream side of the stream must be disabled.

The serializer / deserializer monitors the status of the streams from upstream to downstream and the READY signal goes to high level when the link is established normally among all of GVIF2 transmitters, GVIF2 receivers, GVIF3 transmitters and GVIF3 receivers which are not disabled.

When both GVIF3 transmitter and GVIF3 receiver in a GVIF3 device are disabled, the READY signal goes to high level.

There are two ways to disable GVIF3 transmitter. One is that V_{DD}11A_G3TX is connected to GND. The other one is that the GVIF3TX0_ENABLE register value is set to “ 0 ”.

To disable GVIF3 receiver, the GVIF3RX*_ENABLE register value is set to “ 0 ”.

For Desay

Frame Extended Mode

The video data transmission function can be extended by setting the frame extended mode in serializer.

In the frame extended mode, the packets of video signals which are input to serializer can be transmitted as it is and output them from deserializer.

The deserializer works in the same mode as that which is selected in the serializer.

In the frame extended mode, the number of data in line can be varied for each line. In the normal mode, the number of data in line of the valid pixel region must be constant.

In the frame extended mode, the Data Type shown in the table below can be transmitted. In the normal mode, only some of Data Type are supported.

Table 8 Supported Data Type in Frame Extended Mode (MIPI D-PHY CSI-2)

Data Type	Description
0x10 - 0x17	Generic 8-bit Long Packet Data Types
0x18 - 0x1F	YUV Image Data Types
0x20 - 0x27	RGB Image Data Types
0x28 - 0x2F	RAW Image Data Types
0x30 - 0x37	User Defined 8-bit Data Types
0x38 - 0x3F	Reserved

Table 9 Supported Data Type in Frame Extended Mode (MIPI D-PHY DSI)

Data Type	Description
0x09	Null Packet, no data
0x19	Blanking Packet, no data
0x2C	Packed Pixel Stream, 16-bit YCbCr, 4:2:2 Format
0x3E	Packed Pixel Stream, 24-bit RGB, 8-8-8 Format

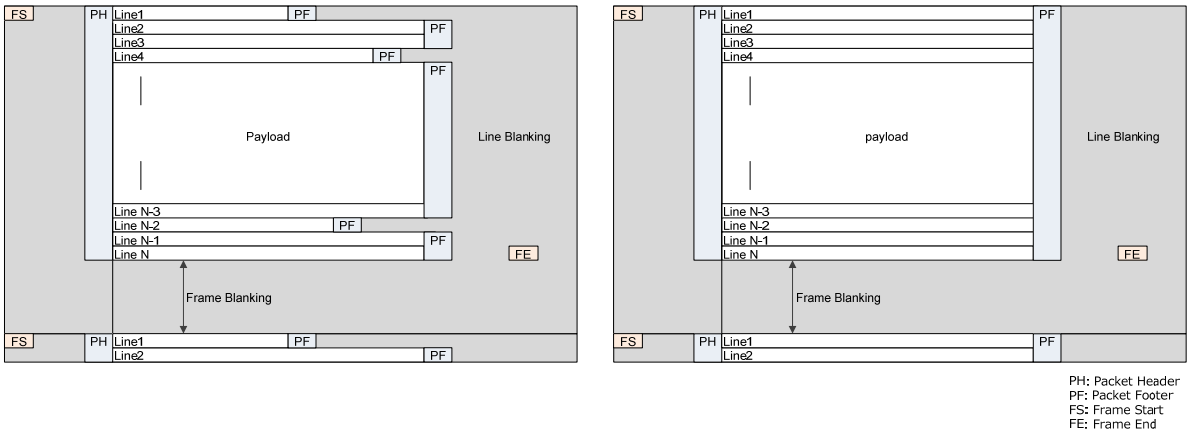

Fig. 21 The example of frame data which is supported in Frame Extended Mode (Left) and Normal Mode (Right)

For Desay

List of Registers

Table 10 List of Registers

Bank Number	Address (hex)	Register type	Register name	Description	Category	Initial value (hex)
0	0x00	R	General Status Monitor - 1	General status monitor 1	Status	—
0	0x01	R	General Status Monitor - 2	General status monitor 2	Status	—
0	0x02	R	General Status Monitor - 3	General status monitor 3	Status	—
0	0x03	R	General Status Monitor - 5	General status monitor 5	Status	—
0	0x04	R	General Status Monitor - 4	General status monitor 4	Status	—
0	0x10	R	Error Status Monitor - 5	Error status monitor 5	Status	—
0	0x11	R	Error Status Monitor - 1	Error status monitor 1	Status	—
0	0x12	R	Error Status Monitor - 2	Error status monitor 2	Status	—
0	0x13	R	Error Status Monitor - 8	Error status monitor 8	Status	—
0	0x14	R	Error Status Monitor - 10	Error status monitor 10	Status	—
0	0x18	R	Error Status Monitor - 6	Error status monitor 6	Status	—
0	0x1A	R	Error Status Monitor - 7	Error status monitor 7	Status	—
0	0x1B	R	Error Status Monitor - 12	Error status monitor 12	Status	—
0	0x1C	R	Error Status Monitor - 13	Error status monitor 13	Status	—
0	0x1E	RW	Interrupt Setup - 5	Interrupt setup 5	Status	0x80
0	0x1F	RW	Interrupt Setup - 1	Interrupt setup 1	Status	0x80
0	0x20	RW	Interrupt Setup - 2	Interrupt setup 2	Status	0x80
0	0x21	RW	Interrupt Setup - 8	Interrupt setup 8	Status	0x80
0	0x22	RW	Interrupt Setup - 10	Interrupt setup 10	Status	0x00
0	0x26	RW	Interrupt Setup - 6	Interrupt setup 6	Status	0x08
0	0x28	RW	Interrupt Setup - 7	Interrupt setup 7	Status	0x08
0	0x29	RW	Interrupt Setup - 12	Interrupt setup 12	Status	0x00
0	0x2A	RW	Interrupt Setup - 13	Interrupt setup 13	Status	0x80
0	0x2E	RW	Error Status Setup	Error status setup	Status	0x00
0	0x40	R	Error Status Monitor - 14	Error status monitor 14	Status	—
0	0x46	R	Error Status Monitor - 17	Error status monitor 17	Status	—
0	0x4D	RW	Interrupt Setup - 14	Interrupt setup 14	Status	0x00
0	0x53	RW	Interrupt Setup - 17	Interrupt setup 17	Status	0x00
0	0x60	RW	GVIF3 Transmitter 0 Setup - 1	GVIF3 transmitter 0 setup 1	GVIF3	0x13
0	0x7C	R	GVIF3 Transmitter 0 Monitor - 1	GVIF3 transmitter 0 monitor 1	GVIF3	—
0	0x7D	RW	GVIF3 Transmitter 0 Setup - 6	GVIF3 transmitter 0 setup 6	GVIF3	0x00
0	0x7F	R	GVIF3 Transmitter 0 Monitor - 2	GVIF3 transmitter 0 monitor 2	GVIF3	—
0	0x80	RW	GVIF3 Receiver 0 Setup - 1	GVIF3 receiver 0 setup 1	GVIF3	0x03
0	0x83	RW	GVIF3 Receiver 0 Setup - 2	GVIF3 receiver 0 setup 2	GVIF3	0x00
0	0x86	RW	GVIF3 Receiver 0 Setup - 6	GVIF3 receiver 0 setup 6	GVIF3	0x00
0	0x88	R	GVIF3 Receiver 0 Monitor - 1	GVIF3 receiver 0 monitor 1	GVIF3	—
0	0x8A	R	GVIF3 Receiver 0 Monitor - 2	GVIF3 receiver 0 monitor 2	GVIF3	—
0	0x8E	RW	GVIF3 Transmitter 0 Setup - 2	GVIF3 transmitter 0 setup 2	GVIF3	0x00
0	0x90	RW	GVIF3 Receiver 0 Setup - 4	GVIF3 receiver 0 setup 4	GVIF3	0x00
0	0x91	RW	GVIF3 Receiver 1 Setup - 4	GVIF3 receiver 1 setup 4	GVIF3	0x00

For Desay

Bank Number	Address (hex)	Register type	Register name	Description	Category	Initial value (hex)
0	0x97	RW	Shared Pin Setup - 1	Shared pin setup 1	IO	0x00
0	0x98	RW	Shared Pin Setup - 2	Shared pin setup 2	IO	0x00
0	0x9A	RW	Unloader Common Setup - 3	Unloader common setup 3	Video	0x00
0	0x9B	RW	Unloader Common Setup - 1	Unloader common setup 1	Video	0x00
0	0x9C	RW	Unloader Common Setup - 2	Unloader common setup 2	Video	0x00
0	0x9D	RW	GVIF3 Receiver 0 Setup - 7	GVIF3 receiver 0 setup 7	GVIF3	0xFF
0	0x9E	RW	Unloader 0 Setup - 1	Unloader 0 setup 1	Video	0x01
0	0x9F	RW	Unloader 0 Setup - 2	Unloader 0 setup 2	Video	0x00
0	0xA0	R	Unloader 0 Monitor - 1	Unloader 0 monitor 1	Video	—
0	0xA2	RW	Unloader 0 Setup - 3	Unloader 0 setup 3	Video	0x00
0	0xA4	RW	Unloader 0 Setup - 4	Unloader 0 setup 4	Video	0x03
0	0xA7	RW	Unloader 1 Setup - 1	Unloader 1 setup 1	Video	0x01
0	0xA8	RW	Unloader 1 Setup - 2	Unloader 1 setup 2	Video	0x00
0	0xA9	R	Unloader 1 Monitor - 1	Unloader 1 monitor 1	Video	—
0	0xAB	RW	Unloader 1 Setup - 3	Unloader 1 setup 3	Video	0x00
0	0xAD	RW	Unloader 1 Setup - 4	Unloader 1 setup 4	Video	0x03
0	0xD6	RW	Daisy Chain Setup - 1	Daisy chain setup 1	Daisy	0x00
0	0xDF	RW	Register Remote Access Setup - 1	Register remote access setup 1	Register	0x00
0	0xE0	RW	Register Remote Access Setup - 2	Register remote access setup 2	Register	0x00
0	0xE1	RW	Register Remote Access Setup - 3	Register remote access setup 3	Register	0x00
0	0xE2	R	Register Remote Access Monitor - 1	Register remote access monitor 1	Register	—
0	0xE3	RW	Register Remote Access Setup - 4	Register remote access setup 4	Register	0x00
0	0xE4	R	Register Remote Access Monitor - 2	Register remote access monitor 2	Register	—
0	0xE8	RW	Register Remote Access Setup - 5	Register remote access setup 5	Register	0x3F
0	0xEC	RW	GPIO Setup - 1	GPIO setup 1	GPIO	0x00
0	0xED	R	GPIO Monitor - 1	GPIO monitor 1	GPIO	—
0	0xEE	RW	GPIO Setup - 4	GPIO setup 4	GPIO	0x3F
0	0xEF	RW	GPIO Setup - 2	GPIO setup 2	GPIO	0x00
0	0xF0	RW	GPIO Setup - 3	GPIO setup 3	GPIO	0x00
0	0xF1	RW	REG_GPIO Setup - 1	REG_GPIO setup 1	REG	0x00
0	0xF2	RW	REG_GPIO Setup - 2	REG_GPIO setup 2	REG	0x00
0	0xF3	R	REG_GPIO Monitor - 1	REG_GPIO monitor 1	REG	—
0	0xF5	RW	Aux0 Setup - 1	Aux0 setup 1	Aux	0x00
0	0xF6	RW	Aux0 Setup - 6	Aux0 setup 6	Aux	0x01
0	0xF7	RW	Aux0 Setup - 2	Aux0 setup 2	Aux	0xFF
0	0xFA	RW	Aux0 Setup - 3	Aux0 setup 3	Aux	0x00
0	0xFE	RW	Aux0 Setup - 5	Aux0 setup 5	Aux	0x00
1	0x1E	R	Failure Diagnosis Monitor - 2	Failure Diagnosis Monitor 2	Diagnosis	—
1	0x2F	RW	SYNC Setup - 2	SYNC setup 2	SYNC	0x00
1	0x30	RW	SYNC Setup - 3	SYNC setup 3	SYNC	0x00
1	0x36	RW	SYNC Setup - 5	SYNC setup 5	SYNC	0x00
1	0x4D	RW	MIPI Transmitter 0_0 Setup - 1	MIPI transmitter 0_0 setup 1	Video	0x14

For Desay

Bank Number	Address (hex)	Register type	Register name	Description	Category	Initial value (hex)
1	0x4E	RW	MIPI Transmitter 0_0 Setup - 2	MIPI transmitter 0_0 setup 2	Video	0x20
1	0x4F	RW	MIPI Transmitter 0_0 Setup - 3	MIPI transmitter 0_0 setup 3	Video	0x20
1	0x50	RW	MIPI Transmitter 0_0 Setup - 4	MIPI transmitter 0_0 setup 4	Video	0x00
1	0x51	RW	MIPI Transmitter 0_0 Setup - 5	MIPI transmitter 0_0 setup 5	Video	0x20
1	0x52	RW	MIPI Transmitter 0_0 Setup - 6	MIPI transmitter 0_0 setup 6	Video	0x20
1	0x53	RW	MIPI Transmitter 0_0 Setup - 7	MIPI transmitter 0_0 setup 7	Video	0x20
1	0x54	RW	MIPI Transmitter 0_0 Setup - 8	MIPI transmitter 0_0 setup 8	Video	0x20
1	0x55	RW	MIPI Transmitter 0_0 Setup - 9	MIPI transmitter 0_0 setup 9	Video	0x00
1	0x56	RW	MIPI Transmitter 0_0 Setup - 10	MIPI transmitter 0_0 setup 10	Video	0x20
1	0x57	RW	MIPI Transmitter 0_0 Setup - 11	MIPI transmitter 0_0 setup 11	Video	0x20
1	0x58	RW	MIPI Transmitter 0_0 Setup - 12	MIPI transmitter 0_0 setup 12	Video	0x1A
1	0x5A	RW	MIPI Transmitter 0_0 Setup - 14	MIPI transmitter 0_0 setup 14	Video	0x20
1	0x5D	RW	MIPI Transmitter 0_0 Setup - 16	MIPI transmitter 0_0 setup 16	Video	0x0F
1	0x5F	RW	PLL0 Setup - 6	PLL0 setup 6	PLL	0x00
1	0x60	RW	PLL0 Setup - 7	PLL0 setup 7	PLL	0x00
1	0x61	RW	PLL0 Setup - 1	PLL0 setup 1	PLL	0x00
1	0x62	RW	PLL0 Setup - 2	PLL0 setup 2	PLL	0x00
1	0x63	RW	PLL0 Setup - 5	PLL0 setup 5	PLL	0x00
1	0x65	RW	PLL0 Setup - 3	PLL0 setup 3	PLL	0x00
1	0x66	RW	PLL0 Setup - 4	PLL0 setup 4	PLL	0x00
1	0x68	RW	SSCG0 Setup - 1	SSCG0 setup 1	SSCG	0x20
1	0x69	RW	SSCG0 Setup - 2	SSCG0 setup 2	SSCG	0x00
1	0x6A	RW	SSCG0 Setup - 3	SSCG0 setup 3	SSCG	0x00
1	0x6B	RW	SSCG0 Setup - 4	SSCG0 setup 4	SSCG	0x00
1	0x79	RW	Daisy Chain Setup - 2	Daisy chain setup 2	Daisy	0x38
1	0x81	RW	GVIF3 Receiver 0 Setup - 3	GVIF3 receiver 0 setup 3	GVIF3	0x40
1	0x86	RW	GVIF3 receiver 0 Setup - 9	GVIF3 receiver 0 setup 9	GVIF3	0xFB
2	0x00	RW	GVIF3 receiver 0 Setup - 8	GVIF3 receiver 0 setup 8	GVIF3	0xFF
2	0x01	RW	GVIF3 receiver 1 Setup - 8	GVIF3 receiver 1 setup 8	GVIF3	0xFF
2	0x02	RW	GVIF3 receiver 2 Setup - 8	GVIF3 receiver 2 setup 8	GVIF3	0xFF
2	0x03	RW	GVIF3 receiver 3 Setup - 8	GVIF3 receiver 3 setup 8	GVIF3	0xFF
2	0x05	RW	MIPI Transmitter 0_0 Setup - 21	MIPI transmitter 0_0 setup 21	Video	0x20
2	0x06	RW	MIPI Transmitter 0_1 Setup - 21	MIPI transmitter 0_1 setup 21	Video	0x20
2	0x07	RW	MIPI Transmitter 1_2 Setup - 21	MIPI transmitter 1_2 setup 21	Video	0x20
2	0x08	RW	MIPI Transmitter 1_3 Setup - 21	MIPI transmitter 1_3 setup 21	Video	0x20
2	0x4D	RW	MIPI Transmitter 0_1 Setup - 1	MIPI transmitter 0_1 setup 1	Video	0x14

For Desay

Bank Number	Address (hex)	Register type	Register name	Description	Category	Initial value (hex)
2	0x4E	RW	MIPI Transmitter 0_1 Setup - 2	MIPI transmitter 0_1 setup 2	Video	0x20
2	0x4F	RW	MIPI Transmitter 0_1 Setup - 3	MIPI transmitter 0_1 setup 3	Video	0x20
2	0x50	RW	MIPI Transmitter 0_1 Setup - 4	MIPI transmitter 0_1 setup 4	Video	0x00
2	0x51	RW	MIPI Transmitter 0_1 Setup - 5	MIPI transmitter 0_1 setup 5	Video	0x20
2	0x52	RW	MIPI Transmitter 0_1 Setup - 6	MIPI transmitter 0_1 setup 6	Video	0x20
2	0x53	RW	MIPI Transmitter 0_1 Setup - 7	MIPI transmitter 0_1 setup 7	Video	0x20
2	0x54	RW	MIPI Transmitter 0_1 Setup - 8	MIPI transmitter 0_1 setup 8	Video	0x20
2	0x55	RW	MIPI Transmitter 0_1 Setup - 9	MIPI transmitter 0_1 setup 9	Video	0x00
2	0x56	RW	MIPI Transmitter 0_1 Setup - 10	MIPI transmitter 0_1 setup 10	Video	0x20
2	0x57	RW	MIPI Transmitter 0_1 Setup - 11	MIPI transmitter 0_1 setup 11	Video	0x20
2	0x58	RW	MIPI Transmitter 0_1 Setup - 12	MIPI transmitter 0_1 setup 12	Video	0x0C
2	0x5A	RW	MIPI Transmitter 0_1 Setup - 14	MIPI transmitter 0_1 setup 14	Video	0x20
2	0x5D	RW	MIPI Transmitter 0_1 Setup - 16	MIPI transmitter 0_1 setup 16	Video	0x0F
2	0x80	RW	GVIF3 Receiver 1 Setup - 1	GVIF3 receiver 1 setup 1	GVIF3	0x03
2	0x81	RW	GVIF3 Receiver 1 Setup - 5	GVIF3 receiver 1 setup 5	GVIF3	0x00
2	0x83	RW	GVIF3 Receiver 1 Setup - 2	GVIF3 receiver 1 setup 2	GVIF3	0x00
2	0x86	RW	GVIF3 Receiver 1 Setup - 6	GVIF3 receiver 1 setup 6	GVIF3	0x00
2	0x88	R	GVIF3 Receiver 1 Monitor - 1	GVIF3 receiver 1 monitor 1	GVIF3	—
2	0x8A	R	GVIF3 Receiver 1 Monitor - 2	GVIF3 receiver 1 monitor 2	GVIF3	—
2	0x95	RW	MIPI Transmitter 0_0 Setup - 17	MIPI transmitter 0_0 setup 17	Video	0x00
2	0x96	RW	MIPI Transmitter 0_0 Setup - 18	MIPI transmitter 0_0 setup 18	Video	0x20
2	0x97	RW	MIPI Transmitter 0_0 Setup - 19	MIPI transmitter 0_0 setup 19	Video	0x20
2	0x98	RW	MIPI Transmitter 0_0 Setup - 20	MIPI transmitter 0_0 setup 20	Video	0x20
2	0x99	RW	MIPI Transmitter 0_1 Setup - 17	MIPI transmitter 0_1 setup 17	Video	0x00
2	0x9A	RW	MIPI Transmitter 0_1 Setup - 18	MIPI transmitter 0_1 setup 18	Video	0x20
2	0x9B	RW	MIPI Transmitter 0_1 Setup - 19	MIPI transmitter 0_1 setup 19	Video	0x20
2	0x9C	RW	MIPI Transmitter 0_1 Setup - 20	MIPI transmitter 0_1 setup 20	Video	0x20
2	0x9D	RW	GVIF3 Receiver 1 Setup - 7	GVIF3 receiver 1 setup 7	GVIF3	0xFF
2	0x9E	RW	Unloader 2 Setup - 1	Unloader 2 setup 1	Video	0x01

For Desay

Bank Number	Address (hex)	Register type	Register name	Description	Category	Initial value (hex)
2	0x9F	RW	Unloader 2 Setup - 2	Unloader 2 setup 2	Video	0x00
2	0xA0	R	Unloader 2 Monitor - 1	Unloader 2 monitor 1	Video	—
2	0xA2	RW	Unloader 2 Setup - 3	Unloader 2 setup 3	Video	0x00
2	0xA4	RW	Unloader 2 Setup - 4	Unloader 2 setup 4	Video	0x03
2	0xA7	RW	Unloader 3 Setup - 1	Unloader 3 setup 1	Video	0x01
2	0xA8	RW	Unloader 3 Setup - 2	Unloader 3 setup 2	Video	0x00
2	0xA9	R	Unloader 3 Monitor - 1	Unloader 3 monitor 1	Video	—
2	0xAB	RW	Unloader 3 Setup - 3	Unloader 3 setup 3	Video	0x00
2	0xAD	RW	Unloader 3 Setup - 4	Unloader 3 setup 4	Video	0x03
2	0xE4	RW	GVIF3 Receiver 1 Setup - 3	GVIF3 receiver 1 setup 3	GVIF3	0x40
2	0xE9	RW	GVIF3 receiver 1 Setup - 9	GVIF3 receiver 1 setup 9	GVIF3	0xFB
2	0xFA	R	Failure Diagnosis Monitor - 4	Failure Diagnosis Monitor 4	Diagnosis	—
2	0xFB	R	Failure Diagnosis Monitor - 5	Failure Diagnosis Monitor 5	Diagnosis	—
2	0xFD	R	Failure Diagnosis Monitor - 6	Failure Diagnosis Monitor 6	Diagnosis	—
2	0xFE	R	Failure Diagnosis Monitor - 7	Failure Diagnosis Monitor 7	Diagnosis	—
3	0x00	RW	SSCG1 Setup - 1	SSCG1 setup 1	SSCG	0x20
3	0x01	RW	SSCG1 Setup - 2	SSCG1 setup 2	SSCG	0x00
3	0x02	RW	SSCG1 Setup - 3	SSCG1 setup 3	SSCG	0x00
3	0x03	RW	SSCG1 Setup - 4	SSCG1 setup 4	SSCG	0x00
3	0x43	RW	PLL1 Setup - 6	PLL1 setup 6	PLL	0x00
3	0x44	RW	PLL1 Setup - 7	PLL1 setup 7	PLL	0x00
3	0x45	RW	PLL1 Setup - 1	PLL1 setup 1	PLL	0x00
3	0x46	RW	PLL1 Setup - 2	PLL1 setup 2	PLL	0x00
3	0x47	RW	PLL1 Setup - 5	PLL1 setup 5	PLL	0x00
3	0x49	RW	PLL1 Setup - 3	PLL1 setup 3	PLL	0x00
3	0x4A	RW	PLL1 Setup - 4	PLL1 setup 4	PLL	0x00
3	0x4D	RW	MIPI Transmitter 1_2 Setup - 1	MIPI transmitter 1_2 setup 1	Video	0x14
3	0x4E	RW	MIPI Transmitter 1_2 Setup - 2	MIPI transmitter 1_2 setup 2	Video	0x20
3	0x4F	RW	MIPI Transmitter 1_2 Setup - 3	MIPI transmitter 1_2 setup 3	Video	0x20
3	0x50	RW	MIPI Transmitter 1_2 Setup - 4	MIPI transmitter 1_2 setup 4	Video	0x00
3	0x51	RW	MIPI Transmitter 1_2 Setup - 5	MIPI transmitter 1_2 setup 5	Video	0x20
3	0x52	RW	MIPI Transmitter 1_2 Setup - 6	MIPI transmitter 1_2 setup 6	Video	0x20
3	0x53	RW	MIPI Transmitter 1_2 Setup - 7	MIPI transmitter 1_2 setup 7	Video	0x20
3	0x54	RW	MIPI Transmitter 1_2 Setup - 8	MIPI transmitter 1_2 setup 8	Video	0x20
3	0x55	RW	MIPI Transmitter 1_2 Setup - 9	MIPI transmitter 1_2 setup 9	Video	0x00
3	0x56	RW	MIPI Transmitter 1_2 Setup - 10	MIPI transmitter 1_2 setup 10	Video	0x20
3	0x57	RW	MIPI Transmitter 1_2 Setup - 11	MIPI transmitter 1_2 setup 11	Video	0x20
3	0x58	RW	MIPI Transmitter 1_2 Setup - 12	MIPI transmitter 1_2 setup 12	Video	0x0A

For Desay

Bank Number	Address (hex)	Register type	Register name	Description	Category	Initial value (hex)
3	0x5A	RW	MIPI Transmitter 1_2 Setup - 14	MIPI transmitter 1_2 setup 14	Video	0x20
3	0x5D	RW	MIPI Transmitter 1_2 Setup - 16	MIPI transmitter 1_2 setup 16	Video	0x0F
3	0x5F	RW	MIPI Transmitter 1_3 Setup - 1	MIPI transmitter 1_3 setup 1	Video	0x14
3	0x60	RW	MIPI Transmitter 1_3 Setup - 2	MIPI transmitter 1_3 setup 2	Video	0x20
3	0x61	RW	MIPI Transmitter 1_3 Setup - 3	MIPI transmitter 1_3 setup 3	Video	0x20
3	0x62	RW	MIPI Transmitter 1_3 Setup - 4	MIPI transmitter 1_3 setup 4	Video	0x00
3	0x63	RW	MIPI Transmitter 1_3 Setup - 5	MIPI transmitter 1_3 setup 5	Video	0x20
3	0x64	RW	MIPI Transmitter 1_3 Setup - 6	MIPI transmitter 1_3 setup 6	Video	0x20
3	0x65	RW	MIPI Transmitter 1_3 Setup - 7	MIPI transmitter 1_3 setup 7	Video	0x20
3	0x66	RW	MIPI Transmitter 1_3 Setup - 8	MIPI transmitter 1_3 setup 8	Video	0x20
3	0x67	RW	MIPI Transmitter 1_3 Setup - 9	MIPI transmitter 1_3 setup 9	Video	0x00
3	0x68	RW	MIPI Transmitter 1_3 Setup - 10	MIPI transmitter 1_3 setup 10	Video	0x20
3	0x69	RW	MIPI Transmitter 1_3 Setup - 11	MIPI transmitter 1_3 setup 11	Video	0x20
3	0x6A	RW	MIPI Transmitter 1_3 Setup - 12	MIPI transmitter 1_3 setup 12	Video	0x0C
3	0x6C	RW	MIPI Transmitter 1_3 Setup - 14	MIPI transmitter 1_3 setup 14	Video	0x20
3	0x6F	RW	MIPI Transmitter 1_3 Setup - 16	MIPI transmitter 1_3 setup 16	Video	0x0F
3	0x71	RW	GVIF3 receiver 2 Setup - 1	GVIF3 receiver 2 setup 1	GVIF3	0x03
3	0x72	RW	GVIF3 receiver 2 Setup - 5	GVIF3 receiver 2 setup 5	GVIF3	0x00
3	0x74	RW	GVIF3 receiver 2 Setup - 2	GVIF3 receiver 2 setup 2	GVIF3	0x00
3	0x77	RW	GVIF3 receiver 2 Setup - 6	GVIF3 receiver 2 setup 6	GVIF3	0x00
3	0x79	R	GVIF3 Receiver 2 Monitor - 1	GVIF3 receiver 2 monitor 1	GVIF3	—
3	0x7B	R	GVIF3 Receiver 2 Monitor - 2	GVIF3 receiver 2 monitor 2	GVIF3	—
3	0x80	RW	GVIF3 receiver 3 Setup - 1	GVIF3 receiver 3 setup 1	GVIF3	0x03
3	0x81	RW	GVIF3 receiver 3 Setup - 5	GVIF3 receiver 3 setup 5	GVIF3	0x00
3	0x83	RW	GVIF3 receiver 3 Setup - 2	GVIF3 receiver 3 setup 2	GVIF3	0x00
3	0x86	RW	GVIF3 receiver 3 Setup - 6	GVIF3 receiver 3 setup 6	GVIF3	0x00
3	0x88	R	GVIF3 Receiver 3 Monitor - 1	GVIF3 receiver 3 monitor 1	GVIF3	—
3	0x8A	R	GVIF3 Receiver 3 Monitor - 2	GVIF3 receiver 3 monitor 2	GVIF3	—
3	0x90	RW	GVIF3 Receiver 2 Setup - 4	GVIF3 receiver 2 setup 4	GVIF3	0x00
3	0x91	RW	GVIF3 Receiver 3 Setup - 4	GVIF3 receiver 3 setup 4	GVIF3	0x00
3	0x95	RW	MIPI Transmitter 1_2 Setup - 17	MIPI transmitter 1_2 setup 17	Video	0x00
3	0x96	RW	MIPI Transmitter 1_2 Setup - 18	MIPI transmitter 1_2 setup 18	Video	0x20

For Desay

Bank Number	Address (hex)	Register type	Register name	Description	Category	Initial value (hex)
3	0x97	RW	MIPI Transmitter 1_2 Setup - 19	MIPI transmitter 1_2 setup 19	Video	0x20
3	0x98	RW	MIPI Transmitter 1_2 Setup - 20	MIPI transmitter 1_2 setup 20	Video	0x20
3	0x99	RW	MIPI Transmitter 1_3 Setup - 17	MIPI transmitter 1_3 setup 17	Video	0x00
3	0x9A	RW	MIPI Transmitter 1_3 Setup - 18	MIPI transmitter 1_3 setup 18	Video	0x20
3	0x9B	RW	MIPI Transmitter 1_3 Setup - 19	MIPI transmitter 1_3 setup 19	Video	0x20
3	0x9C	RW	MIPI Transmitter 1_3 Setup - 20	MIPI transmitter 1_3 setup 20	Video	0x20
3	0x9D	RW	GVIF3 receiver 2 Setup - 7	GVIF3 receiver 2 setup 7	GVIF3	0xFF
3	0x9E	RW	GVIF3 receiver 3 Setup - 7	GVIF3 receiver 3 setup 7	GVIF3	0xFF
3	0xA7	RW	Unloader 4 Setup - 1	Unloader 4 setup 1	Video	0x01
3	0xA8	RW	Unloader 4 Setup - 2	Unloader 4 setup 2	Video	0x00
3	0xA9	R	Unloader 4 Monitor - 1	Unloader 4 monitor 1	Video	—
3	0xAB	RW	Unloader 4 Setup - 3	Unloader 4 setup 3	Video	0x00
3	0xAD	RW	Unloader 4 Setup - 4	Unloader 4 setup 4	Video	0x03
3	0xB0	RW	Unloader 5 Setup - 1	Unloader 5 setup 1	Video	0x01
3	0xB1	RW	Unloader 5 Setup - 2	Unloader 5 setup 2	Video	0x00
3	0xB2	R	Unloader 5 Monitor - 1	Unloader 5 monitor 1	Video	—
3	0xB4	RW	Unloader 5 Setup - 3	Unloader 5 setup 3	Video	0x00
3	0xB6	RW	Unloader 5 Setup - 4	Unloader 5 setup 4	Video	0x03
3	0xB9	RW	Unloader 6 Setup - 1	Unloader 6 setup 1	Video	0x01
3	0xBA	RW	Unloader 6 Setup - 2	Unloader 6 setup 2	Video	0x00
3	0xBB	R	Unloader 6 Monitor - 1	Unloader 6 monitor 1	Video	—
3	0xBD	RW	Unloader 6 Setup - 3	Unloader 6 setup 3	Video	0x00
3	0xBF	RW	Unloader 6 Setup - 4	Unloader 6 setup 4	Video	0x03
3	0xC2	RW	Unloader 7 Setup - 1	Unloader 7 setup 1	Video	0x01
3	0xC3	RW	Unloader 7 Setup - 2	Unloader 7 setup 2	Video	0x00
3	0xC4	R	Unloader 7 Monitor - 1	Unloader 7 monitor 1	Video	—
3	0xC6	RW	Unloader 7 Setup - 3	Unloader 7 setup 3	Video	0x00
3	0xC8	RW	Unloader 7 Setup - 4	Unloader 7 setup 4	Video	0x03
3	0xCF	RW	GVIF3 Receiver 2 Setup - 3	GVIF3 receiver 2 setup 3	GVIF3	0x40
3	0xD4	RW	GVIF3 receiver 2 Setup - 9	GVIF3 receiver 2 setup 9	GVIF3	0xFB
3	0xE4	RW	GVIF3 Receiver 3 Setup - 3	GVIF3 receiver 3 setup 3	GVIF3	0x40
3	0xE9	RW	GVIF3 receiver 3 Setup - 9	GVIF3 receiver 3 setup 9	GVIF3	0xFB
4	0x1A	RW	Aux1 Setup - 1	Aux1 setup 1	Aux	0x00
4	0x1B	RW	Aux1 Setup - 6	Aux1 setup 6	Aux	0x00
4	0x1C	RW	Aux1 Setup - 2	Aux1 setup 2	Aux	0xFF
4	0x1F	RW	Aux1 Setup - 3	Aux1 setup 3	Aux	0x00
4	0x23	RW	Aux1 Setup - 5	Aux1 setup 5	Aux	0x00
10	0x00	RW	MIPI C-PHY Transmitter 0 Setup - 1	MIPI C-PHY transmitter 0 setup 1	Video	0x02
10	0x3E	RW	MIPI C-PHY Transmitter 0 Setup - 2	MIPI C-PHY transmitter 0 setup 2	Video	0x00
10	0x3F	RW	MIPI C-PHY Transmitter 0 Setup - 3	MIPI C-PHY transmitter 0 setup 3	Video	0x00
10	0x40	RW	MIPI C-PHY Transmitter 0 Setup - 4	MIPI C-PHY transmitter 0 setup 4	Video	0x00
10	0x41	RW	MIPI C-PHY Transmitter 0 Setup - 5	MIPI C-PHY transmitter 0 setup 5	Video	0x00

For Desay

Bank Number	Address (hex)	Register type	Register name	Description	Category	Initial value (hex)
10	0x42	RW	MIPI C-PHY Transmitter 0 Setup - 6	MIPI C-PHY transmitter 0 setup 6	Video	0x00
10	0x43	RW	MIPI C-PHY Transmitter 0 Setup - 7	MIPI C-PHY transmitter 0 setup 7	Video	0x00
10	0x44	RW	MIPI C-PHY Transmitter 0 Setup - 8	MIPI C-PHY transmitter 0 setup 8	Video	0x00
10	0x45	RW	MIPI C-PHY Transmitter 0 Setup - 9	MIPI C-PHY transmitter 0 setup 9	Video	0x00
10	0x46	RW	MIPI C-PHY Transmitter 0 Setup - 10	MIPI C-PHY transmitter 0 setup 10	Video	0x00
10	0x47	RW	MIPI C-PHY Transmitter 0 Setup - 11	MIPI C-PHY transmitter 0 setup 11	Video	0x00
10	0x48	RW	MIPI C-PHY Transmitter 0 Setup - 12	MIPI C-PHY transmitter 0 setup 12	Video	0xE8
10	0x49	RW	MIPI C-PHY Transmitter 0 Setup - 13	MIPI C-PHY transmitter 0 setup 13	Video	0x03
10	0x4A	RW	MIPI C-PHY Transmitter 0 Setup - 14	MIPI C-PHY transmitter 0 setup 14	Video	0x64
10	0x4B	RW	MIPI C-PHY Transmitter 0 Setup - 15	MIPI C-PHY transmitter 0 setup 15	Video	0x00
10	0x4D	RW	MIPI C-PHY Transmitter 0 Setup - 17	MIPI C-PHY transmitter 0 setup 17	Video	0x00
10	0x53	RW	MIPI C-PHY Transmitter 0 Setup - 20	MIPI C-PHY transmitter 0 setup 20	Video	0x02
10	0x54	RW	MIPI C-PHY Transmitter 0 Setup - 21	MIPI C-PHY transmitter 0 setup 21	Video	0x02
10	0x83	RW	MIPI C-PHY Transmitter 0 Setup - 23	MIPI C-PHY transmitter 0 setup 23	Video	0x00
10	0x84	RW	MIPI C-PHY Transmitter 0 Setup - 24	MIPI C-PHY transmitter 0 setup 24	Video	0x00
10	0x85	RW	MIPI C-PHY Transmitter 0 Setup - 25	MIPI C-PHY transmitter 0 setup 25	Video	0x29
10	0x86	RW	MIPI C-PHY Transmitter 0 Setup - 26	MIPI C-PHY transmitter 0 setup 26	Video	0x00
10	0x87	RW	MIPI C-PHY Transmitter 0 Setup - 27	MIPI C-PHY transmitter 0 setup 27	Video	0x29
10	0x88	RW	MIPI C-PHY Transmitter 0 Setup - 28	MIPI C-PHY transmitter 0 setup 28	Video	0x00
10	0x89	RW	MIPI C-PHY Transmitter 0 Setup - 29	MIPI C-PHY transmitter 0 setup 29	Video	0x03
10	0x8A	RW	MIPI C-PHY Transmitter 0 Setup - 30	MIPI C-PHY transmitter 0 setup 30	Video	0x00
10	0x8B	RW	MIPI C-PHY Transmitter 0 Setup - 31	MIPI C-PHY transmitter 0 setup 31	Video	0x03
10	0x8C	RW	MIPI C-PHY Transmitter 0 Setup - 32	MIPI C-PHY transmitter 0 setup 32	Video	0x00
10	0x8D	RW	MIPI C-PHY Transmitter 0 Setup - 33	MIPI C-PHY transmitter 0 setup 33	Video	0x03
10	0x8E	RW	MIPI C-PHY Transmitter 0 Setup - 34	MIPI C-PHY transmitter 0 setup 34	Video	0x00
10	0x8F	RW	MIPI C-PHY Transmitter 0 Setup - 35	MIPI C-PHY transmitter 0 setup 35	Video	0x03
10	0x90	RW	MIPI C-PHY Transmitter 0 Setup - 36	MIPI C-PHY transmitter 0 setup 36	Video	0x00
10	0x91	RW	MIPI C-PHY Transmitter 0 Setup - 37	MIPI C-PHY transmitter 0 setup 37	Video	0x01

For Desay

Bank Number	Address (hex)	Register type	Register name	Description	Category	Initial value (hex)
10	0x92	RW	MIPI C-PHY Transmitter 0 Setup - 38	MIPI C-PHY transmitter 0 setup 38	Video	0x00
10	0x93	RW	MIPI C-PHY Transmitter 0 Setup - 39	MIPI C-PHY transmitter 0 setup 39	Video	0x01
10	0x94	RW	MIPI C-PHY Transmitter 0 Setup - 40	MIPI C-PHY transmitter 0 setup 40	Video	0x00
10	0x95	RW	MIPI C-PHY Transmitter 0 Setup - 41	MIPI C-PHY transmitter 0 setup 41	Video	0x01
10	0x96	RW	MIPI C-PHY Transmitter 0 Setup - 42	MIPI C-PHY transmitter 0 setup 42	Video	0x00
10	0x97	RW	MIPI C-PHY Transmitter 0 Setup - 43	MIPI C-PHY transmitter 0 setup 43	Video	0x00
10	0x98	RW	MIPI C-PHY Transmitter 0 Setup - 44	MIPI C-PHY transmitter 0 setup 44	Video	0x00
10	0x99	RW	MIPI C-PHY Transmitter 0 Setup - 45	MIPI C-PHY transmitter 0 setup 45	Video	0x00
10	0x9A	RW	MIPI C-PHY Transmitter 0 Setup - 46	MIPI C-PHY transmitter 0 setup 46	Video	0x00
10	0x9B	RW	MIPI C-PHY Transmitter 0 Setup - 47	MIPI C-PHY transmitter 0 setup 47	Video	0x00
10	0x9C	RW	MIPI C-PHY Transmitter 0 Setup - 48	MIPI C-PHY transmitter 0 setup 48	Video	0x00
10	0x9D	RW	MIPI C-PHY Transmitter 0 Setup - 49	MIPI C-PHY transmitter 0 setup 49	Video	0x00
10	0x9E	RW	MIPI C-PHY Transmitter 0 Setup - 50	MIPI C-PHY transmitter 0 setup 50	Video	0x00
10	0x9F	RW	MIPI C-PHY Transmitter 0 Setup - 51	MIPI C-PHY transmitter 0 setup 51	Video	0x00
10	0xA0	RW	MIPI C-PHY Transmitter 0 Setup - 52	MIPI C-PHY transmitter 0 setup 52	Video	0x00
10	0xA1	RW	MIPI C-PHY Transmitter 0 Setup - 53	MIPI C-PHY transmitter 0 setup 53	Video	0x00
10	0xA2	RW	MIPI C-PHY Transmitter 0 Setup - 54	MIPI C-PHY transmitter 0 setup 54	Video	0x00
10	0xA3	RW	MIPI C-PHY Transmitter 0 Setup - 55	MIPI C-PHY transmitter 0 setup 55	Video	0x00
10	0xA4	RW	MIPI C-PHY Transmitter 0 Setup - 56	MIPI C-PHY transmitter 0 setup 56	Video	0x00
10	0xA9	RW	MIPI C-PHY Transmitter 0 Setup - 60	MIPI C-PHY transmitter 0 setup 60	Video	0x35
10	0xDF	RW	MIPI C-PHY Transmitter 0 Setup - 65	MIPI C-PHY transmitter 0 setup 65	Video	0x00
10	0xE6	RW	MIPI C-PHY Transmitter 0 Setup - 68	MIPI C-PHY transmitter 0 setup 68	Video	0x00
10	0xEA	RW	MIPI C-PHY Transmitter 0 Setup - 71	MIPI C-PHY transmitter 0 setup 71	Video	0x00
10	0xF6	RW	MIPI C-PHY Transmitter 0 Setup - 81	MIPI C-PHY transmitter 0 setup 81	Video	0x00
10	0xF7	RW	MIPI C-PHY Transmitter 0 Setup - 82	MIPI C-PHY transmitter 0 setup 82	Video	0x00
11	0x00	RW	MIPI C-PHY Transmitter 1 Setup - 1	MIPI C-PHY transmitter 1 setup 1	Video	0x02
11	0x3E	RW	MIPI C-PHY Transmitter 1 Setup - 2	MIPI C-PHY transmitter 1 setup 2	Video	0x00
11	0x3F	RW	MIPI C-PHY Transmitter 1 Setup - 3	MIPI C-PHY transmitter 1 setup 3	Video	0x00

For Desay

Bank Number	Address (hex)	Register type	Register name	Description	Category	Initial value (hex)
11	0x40	RW	MIPI C-PHY Transmitter 1 Setup - 4	MIPI C-PHY transmitter 1 setup 4	Video	0x00
11	0x41	RW	MIPI C-PHY Transmitter 1 Setup - 5	MIPI C-PHY transmitter 1 setup 5	Video	0x00
11	0x42	RW	MIPI C-PHY Transmitter 1 Setup - 6	MIPI C-PHY transmitter 1 setup 6	Video	0x00
11	0x43	RW	MIPI C-PHY Transmitter 1 Setup - 7	MIPI C-PHY transmitter 1 setup 7	Video	0x00
11	0x44	RW	MIPI C-PHY Transmitter 1 Setup - 8	MIPI C-PHY transmitter 1 setup 8	Video	0x00
11	0x45	RW	MIPI C-PHY Transmitter 1 Setup - 9	MIPI C-PHY transmitter 1 setup 9	Video	0x00
11	0x46	RW	MIPI C-PHY Transmitter 1 Setup - 10	MIPI C-PHY transmitter 1 setup 10	Video	0x00
11	0x47	RW	MIPI C-PHY Transmitter 1 Setup - 11	MIPI C-PHY transmitter 1 setup 11	Video	0x00
11	0x48	RW	MIPI C-PHY Transmitter 1 Setup - 12	MIPI C-PHY transmitter 1 setup 12	Video	0xE8
11	0x49	RW	MIPI C-PHY Transmitter 1 Setup - 13	MIPI C-PHY transmitter 1 setup 13	Video	0x03
11	0x4A	RW	MIPI C-PHY Transmitter 1 Setup - 14	MIPI C-PHY transmitter 1 setup 14	Video	0x64
11	0x4B	RW	MIPI C-PHY Transmitter 1 Setup - 15	MIPI C-PHY transmitter 1 setup 15	Video	0x00
11	0x4D	RW	MIPI C-PHY Transmitter 1 Setup - 17	MIPI C-PHY transmitter 1 setup 17	Video	0x00
11	0x53	RW	MIPI C-PHY Transmitter 1 Setup - 20	MIPI C-PHY transmitter 1 setup 20	Video	0x02
11	0x54	RW	MIPI C-PHY Transmitter 1 Setup - 21	MIPI C-PHY transmitter 1 setup 21	Video	0x02
11	0x83	RW	MIPI C-PHY Transmitter 1 Setup - 23	MIPI C-PHY transmitter 1 setup 23	Video	0x00
11	0x84	RW	MIPI C-PHY Transmitter 1 Setup - 24	MIPI C-PHY transmitter 1 setup 24	Video	0x00
11	0x85	RW	MIPI C-PHY Transmitter 1 Setup - 25	MIPI C-PHY transmitter 1 setup 25	Video	0x29
11	0x86	RW	MIPI C-PHY Transmitter 1 Setup - 26	MIPI C-PHY transmitter 1 setup 26	Video	0x00
11	0x87	RW	MIPI C-PHY Transmitter 1 Setup - 27	MIPI C-PHY transmitter 1 setup 27	Video	0x29
11	0x88	RW	MIPI C-PHY Transmitter 1 Setup - 28	MIPI C-PHY transmitter 1 setup 28	Video	0x00
11	0x89	RW	MIPI C-PHY Transmitter 1 Setup - 29	MIPI C-PHY transmitter 1 setup 29	Video	0x03
11	0x8A	RW	MIPI C-PHY Transmitter 1 Setup - 30	MIPI C-PHY transmitter 1 setup 30	Video	0x00
11	0x8B	RW	MIPI C-PHY Transmitter 1 Setup - 31	MIPI C-PHY transmitter 1 setup 31	Video	0x03
11	0x8C	RW	MIPI C-PHY Transmitter 1 Setup - 32	MIPI C-PHY transmitter 1 setup 32	Video	0x00
11	0x8D	RW	MIPI C-PHY Transmitter 1 Setup - 33	MIPI C-PHY transmitter 1 setup 33	Video	0x03
11	0x8E	RW	MIPI C-PHY Transmitter 1 Setup - 34	MIPI C-PHY transmitter 1 setup 34	Video	0x00
11	0x8F	RW	MIPI C-PHY Transmitter 1 Setup - 35	MIPI C-PHY transmitter 1 setup 35	Video	0x03

For Desay

Bank Number	Address (hex)	Register type	Register name	Description	Category	Initial value (hex)
11	0x90	RW	MIPI C-PHY Transmitter 1 Setup - 36	MIPI C-PHY transmitter 1 setup 36	Video	0x00
11	0x91	RW	MIPI C-PHY Transmitter 1 Setup - 37	MIPI C-PHY transmitter 1 setup 37	Video	0x01
11	0x92	RW	MIPI C-PHY Transmitter 1 Setup - 38	MIPI C-PHY transmitter 1 setup 38	Video	0x00
11	0x93	RW	MIPI C-PHY Transmitter 1 Setup - 39	MIPI C-PHY transmitter 1 setup 39	Video	0x01
11	0x94	RW	MIPI C-PHY Transmitter 1 Setup - 40	MIPI C-PHY transmitter 1 setup 40	Video	0x00
11	0x95	RW	MIPI C-PHY Transmitter 1 Setup - 41	MIPI C-PHY transmitter 1 setup 41	Video	0x01
11	0x96	RW	MIPI C-PHY Transmitter 1 Setup - 42	MIPI C-PHY transmitter 1 setup 42	Video	0x00
11	0x97	RW	MIPI C-PHY Transmitter 1 Setup - 43	MIPI C-PHY transmitter 1 setup 43	Video	0x00
11	0x98	RW	MIPI C-PHY Transmitter 1 Setup - 44	MIPI C-PHY transmitter 1 setup 44	Video	0x00
11	0x99	RW	MIPI C-PHY Transmitter 1 Setup - 45	MIPI C-PHY transmitter 1 setup 45	Video	0x00
11	0x9A	RW	MIPI C-PHY Transmitter 1 Setup - 46	MIPI C-PHY transmitter 1 setup 46	Video	0x00
11	0x9B	RW	MIPI C-PHY Transmitter 1 Setup - 47	MIPI C-PHY transmitter 1 setup 47	Video	0x00
11	0x9C	RW	MIPI C-PHY Transmitter 1 Setup - 48	MIPI C-PHY transmitter 1 setup 48	Video	0x00
11	0x9D	RW	MIPI C-PHY Transmitter 1 Setup - 49	MIPI C-PHY transmitter 1 setup 49	Video	0x00
11	0x9E	RW	MIPI C-PHY Transmitter 1 Setup - 50	MIPI C-PHY transmitter 1 setup 50	Video	0x00
11	0x9F	RW	MIPI C-PHY Transmitter 1 Setup - 51	MIPI C-PHY transmitter 1 setup 51	Video	0x00
11	0xA0	RW	MIPI C-PHY Transmitter 1 Setup - 52	MIPI C-PHY transmitter 1 setup 52	Video	0x00
11	0xA1	RW	MIPI C-PHY Transmitter 1 Setup - 53	MIPI C-PHY transmitter 1 setup 53	Video	0x00
11	0xA2	RW	MIPI C-PHY Transmitter 1 Setup - 54	MIPI C-PHY transmitter 1 setup 54	Video	0x00
11	0xA3	RW	MIPI C-PHY Transmitter 1 Setup - 55	MIPI C-PHY transmitter 1 setup 55	Video	0x00
11	0xA4	RW	MIPI C-PHY Transmitter 1 Setup - 56	MIPI C-PHY transmitter 1 setup 56	Video	0x00
11	0xA9	RW	MIPI C-PHY Transmitter 1 Setup - 60	MIPI C-PHY transmitter 1 setup 60	Video	0x35
11	0xDF	RW	MIPI C-PHY Transmitter 1 Setup - 65	MIPI C-PHY transmitter 1 setup 65	Video	0x00
11	0xE6	RW	MIPI C-PHY Transmitter 1 Setup - 68	MIPI C-PHY transmitter 1 setup 68	Video	0x00
11	0xEA	RW	MIPI C-PHY Transmitter 1 Setup - 71	MIPI C-PHY transmitter 1 setup 71	Video	0x00
11	0xF6	RW	MIPI C-PHY Transmitter 1 Setup - 81	MIPI C-PHY transmitter 1 setup 81	Video	0x00
11	0xF7	RW	MIPI C-PHY Transmitter 1 Setup - 82	MIPI C-PHY transmitter 1 setup 82	Video	0x00
12	0x00	RW	MIPI C-PHY Transmitter Common Setup - 1	MIPI C-PHY transmitter common setup 1	Video	0x00
12	0x10	RW	Unloader 0 Setup - 5	Unloader 0 setup 5	Video	0x00

For Desay

Bank Number	Address (hex)	Register type	Register name	Description	Category	Initial value (hex)
12	0x11	RW	Unloader 0 Setup - 6	Unloader 0 setup 6	Video	0x00
12	0x12	RW	Unloader 0 Setup - 7	Unloader 0 setup 7	Video	0x00
12	0x13	RW	Unloader 0 Setup - 8	Unloader 0 setup 8	Video	0x00
12	0x14	RW	Unloader 0 Setup - 9	Unloader 0 setup 9	Video	0x00
12	0x18	RW	Unloader 1 Setup - 5	Unloader 1 setup 5	Video	0x00
12	0x19	RW	Unloader 1 Setup - 6	Unloader 1 setup 6	Video	0x00
12	0x1A	RW	Unloader 1 Setup - 7	Unloader 1 setup 7	Video	0x00
12	0x1B	RW	Unloader 1 Setup - 8	Unloader 1 setup 8	Video	0x00
12	0x1C	RW	Unloader 1 Setup - 9	Unloader 1 setup 9	Video	0x00
12	0x20	RW	Unloader 2 Setup - 5	Unloader 2 setup 5	Video	0x00
12	0x21	RW	Unloader 2 Setup - 6	Unloader 2 setup 6	Video	0x00
12	0x22	RW	Unloader 2 Setup - 7	Unloader 2 setup 7	Video	0x00
12	0x23	RW	Unloader 2 Setup - 8	Unloader 2 setup 8	Video	0x00
12	0x24	RW	Unloader 2 Setup - 9	Unloader 2 setup 9	Video	0x00
12	0x28	RW	Unloader 3 Setup - 5	Unloader 3 setup 5	Video	0x00
12	0x29	RW	Unloader 3 Setup - 6	Unloader 3 setup 6	Video	0x00
12	0x2A	RW	Unloader 3 Setup - 7	Unloader 3 setup 7	Video	0x00
12	0x2B	RW	Unloader 3 Setup - 8	Unloader 3 setup 8	Video	0x00
12	0x2C	RW	Unloader 3 Setup - 9	Unloader 3 setup 9	Video	0x00
12	0x30	RW	Unloader 4 Setup - 5	Unloader 4 setup 5	Video	0x00
12	0x31	RW	Unloader 4 Setup - 6	Unloader 4 setup 6	Video	0x00
12	0x32	RW	Unloader 4 Setup - 7	Unloader 4 setup 7	Video	0x00
12	0x33	RW	Unloader 4 Setup - 8	Unloader 4 setup 8	Video	0x00
12	0x34	RW	Unloader 4 Setup - 9	Unloader 4 setup 9	Video	0x00
12	0x38	RW	Unloader 5 Setup - 5	Unloader 5 setup 5	Video	0x00
12	0x39	RW	Unloader 5 Setup - 6	Unloader 5 setup 6	Video	0x00
12	0x3A	RW	Unloader 5 Setup - 7	Unloader 5 setup 7	Video	0x00
12	0x3B	RW	Unloader 5 Setup - 8	Unloader 5 setup 8	Video	0x00
12	0x3C	RW	Unloader 5 Setup - 9	Unloader 5 setup 9	Video	0x00
12	0x40	RW	Unloader 6 Setup - 5	Unloader 6 setup 5	Video	0x00
12	0x41	RW	Unloader 6 Setup - 6	Unloader 6 setup 6	Video	0x00
12	0x42	RW	Unloader 6 Setup - 7	Unloader 6 setup 7	Video	0x00
12	0x43	RW	Unloader 6 Setup - 8	Unloader 6 setup 8	Video	0x00
12	0x44	RW	Unloader 6 Setup - 9	Unloader 6 setup 9	Video	0x00
12	0x48	RW	Unloader 7 Setup - 5	Unloader 7 setup 5	Video	0x00
12	0x49	RW	Unloader 7 Setup - 6	Unloader 7 setup 6	Video	0x00
12	0x4A	RW	Unloader 7 Setup - 7	Unloader 7 setup 7	Video	0x00
12	0x4B	RW	Unloader 7 Setup - 8	Unloader 7 setup 8	Video	0x00
12	0x4C	RW	Unloader 7 Setup - 9	Unloader 7 setup 9	Video	0x00
—	0xFF	RW	Register Bank Number Setup	Register bank number setup	Register	0x00

For Desay

Detailed Description of Registers

The detailed description of each register is given below.

The upper, middle and lower of the table show the bit number, the register name and the read / write flag with the initial value, respectively.

The “ — ” means the reserved registers. The other addresses which are not described are also the reserved registers. Note that they must not be changed from the initial value.

The register value “ 0 ” is defined as low level, and “ 1 ” as high level. “ x ” means the indeterminate value.

Do not set the values which are described “ Reserved ” in the detailed description of registers.

For Desay

General Status Monitor - 1 : General status monitor 1 (bank0,0x00,R)

This register indicates the status of the GVIF3 device.

7	6	5	4	3	2	1	0
GVIF3RX 1_ACTIV ATED	—	—	GVIF3RX 0_ACTIV ATED	—	—	—	GVIF3TX 0_ACTIV ATED
R-0	R-x	R-x	R-0	R-x	R-x	R-x	R-0

Bit7 : GVIF3RX1_ACTIVATED

This bit indicates the operating status of the GVIF3 receiver 1.

0: Idle
1: Initialization is completed and the link is established.

Bit4 : GVIF3RX0_ACTIVATED

This bit indicates the operating status of the GVIF3 receiver 0.

0: Idle
1: Initialization is completed and the link is established.

Bit0 : GVIF3TX0_ACTIVATED

This bit indicates the operating status of the GVIF3 transmitter 0.

0: Idle
1: Initialization is completed and the link is established.

For Desay

General Status Monitor - 2 : General status monitor 2 (bank0,0x01,R)

This register indicates the status of the GVIF3 device.

7	6	5	4	3	2	1	0
INTERRUPT	—	—	READY	—	—	GVIF3RX1_LOS	GVIF3RX0_LOS
R-0	R-x	R-x	R-0	R-x	R-x	R-0	R-0

Bit7 : INTERRUPT

This bit indicates the same logical value as INTERRUPT signal.

0: Low
1: High

Bit4 : READY

This bit indicates that unused GVIF port is disabled and the link is established normally among all of the GVIF transmitters and GVIF receivers which are not disabled.

0: Port termination and link establishment are not completed.
1: Port termination and link establishment are completed.

Bit1 : GVIF3RX1_LOS

This bit indicates the signal reception status of the GVIF3 receiver 1.

0: Normal
1: Loss of signal

Bit0 : GVIF3RX0_LOS

This bit indicates the signal reception status of the GVIF3 receiver 0.

0: Normal
1: Loss of signal

For Desay

General Status Monitor - 3 : General status monitor 3 (bank0,0x02,R)

This register indicates the status of the GVIF3 device.

7	6	5	4	3	2	1	0
—	—	GVIF3RX 3_LOS	GVIF3RX 2_LOS	—	—	—	—
R-x	R-x	R-0	R-0	R-x	R-x	R-x	R-x

Bit5 : GVIF3RX3_LOS

This bit indicates the signal reception status of the GVIF3 receiver 3.

0: Normal
1: Loss of signal

Bit4 : GVIF3RX2_LOS

This bit indicates the signal reception status of the GVIF3 receiver 2.

0: Normal
1: Loss of signal

For Desay

General Status Monitor - 5 : General status monitor 5 (bank0,0x03,R)

This register indicates the status of the GVIF3 device.

7	6	5	4	3	2	1	0
GVIFID[7:0]							
R-0	R-0	R-0	R-0	R-0	R-0	R-0	R-0

Bit7-0 : GVIFID

These bits indicate the GVIFID of this GVIF device .

For Desay

General Status Monitor - 4 : General status monitor 4 (bank0,0x04,R)

This register indicates the status of the GVIF3 device.

7	6	5	4	3	2	1	0
GVIF3RX3_ACTIVATED	GVIF3RX2_ACTIVATED	—	—	—	—	—	—
R-0	R-0	R-x	R-x	R-x	R-x	R-x	R-x

Bit7 : GVIF3RX3_ACTIVATED

This bit indicates the operating status of the GVIF3 receiver 3.

0: Idle
1: Initialization is completed and the link is established.

Bit6 : GVIF3RX2_ACTIVATED

This bit indicates the operating status of the GVIF3 receiver 2.

0: Idle
1: Initialization is completed and the link is established.

For Desay

Error Status Monitor - 5 : Error status monitor 5 (bank0,0x10,R)

This register indicates the error occurs in this GVIF3 device.

Once an error occurs, these registers keep high level until they are cleared.

This register can be cleared by the ERROR_CLEAR register.

The status of the GVIF3 device is changed and some errors may occur when other registers are set. This register must be cleared when other registers are set.

7	6	5	4	3	2	1	0
GVIF3RX 1_FAIL	—	—	—	—	—	—	—
R-0	R-x	R-x	R-x	R-x	R-x	R-x	R-x

Bit7 : GVIF3RX1_FAIL

This bit indicates the communication status of the GVIF3 transmitter 1.

0: Normal
1: Fail

For Desay

Error Status Monitor - 1 : Error status monitor 1 (bank0,0x11,R)

This register indicates the error occurs in this GVIF3 device.

Once an error occurs, these registers keep high level until they are cleared.

This register can be cleared by the ERROR_CLEAR register.

The status of the GVIF3 device is changed and some errors may occur when other registers are set. This register must be cleared when other registers are set.

7	6	5	4	3	2	1	0
GVIF3TX 0_FAIL	—	—	—	—	—	—	—
R-0	R-x	R-x	R-x	R-x	R-x	R-x	R-x

Bit7 : GVIF3TX0_FAIL

This bit indicates the communication status of the GVIF3 transmitter 0.

0: Normal
1: Fail

For Desay

Error Status Monitor - 2 : Error status monitor 2 (bank0,0x12,R)

This register indicates the error occurs in this GVIF3 device.

Once an error occurs, these registers keep high level until they are cleared.

This register can be cleared by the ERROR_CLEAR register.

The status of the GVIF3 device is changed and some errors may occur when other registers are set. This register must be cleared when other registers are set.

7	6	5	4	3	2	1	0
GVIF3RX 0_FAIL	—	—	—	—	—	—	—
R-0	R-x	R-x	R-x	R-x	R-x	R-x	R-x

Bit7 : GVIF3RX0_FAIL

This bit indicates the communication status of the GVIF3 transmitter 0.

0: Normal
1: Fail

For Desay

Error Status Monitor - 8 : Error status monitor 8 (bank0,0x13,R)

This register indicates the error occurs in this GVIF3 device.

Once an error occurs, these registers keep high level until they are cleared.

This register can be cleared by the ERROR_CLEAR register.

The status of the GVIF3 device is changed and some errors may occur when other registers are set. This register must be cleared when other registers are set.

7	6	5	4	3	2	1	0
UNLOADER_0_FAIL	—	—	—	—	—	—	—
R-0	R-x	R-x	R-x	R-x	R-x	R-x	R-x

Bit7 : UNLOADER_0_FAIL

This bit indicates the status of Unloaders which are connected to video output port (Port 0).

0: Normal
1: Fail

For Desay

Error Status Monitor - 10 : Error status monitor 10 (bank0,0x14,R)

This register indicates the error occurs in this GVIF3 device.

Once an error occurs, these registers keep high level until they are cleared.

This register can be cleared by the ERROR_CLEAR register.

The status of the GVIF3 device is changed and some errors may occur when other registers are set. This register must be cleared when other registers are set.

7	6	5	4	3	2	1	0
DAISY0_ FAIL	—	DAISY1_ FAIL	—	—	—	—	—
R-0	R-x	R-0	R-x	R-x	R-x	R-x	R-x

Bit7 : DAISY0_FAIL

This bit indicates the multiplexing status in the daisy chain connection .

(Connection path: GVIF3 receiver 0 to GVIF3 transmitter 0)

0: Normal
1: Fail

Bit5 : DAISY1_FAIL

This bit indicates the multiplexing status in the daisy chain connection .

(Connection path: GVIF3 receiver 0 to GVIF3 transmitter 1 or GVIF3 receiver 1 to GVIF3 transmitter 0)

0: Normal
1: Fail

For Desay

Error Status Monitor - 6 : Error status monitor 6 (bank0,0x18,R)

This register indicates the error occurs in this GVIF3 device.

Once an error occurs, these registers keep high level until they are cleared.

This register can be cleared by the ERROR_CLEAR register.

The status of the GVIF3 device is changed and some errors may occur when other registers are set. This register must be cleared when other registers are set.

7	6	5	4	3	2	1	0
—	—	—	—	GVIF3RX 2_FAIL	—	—	—
R-x	R-x	R-x	R-x	R-0	R-x	R-x	R-x

Bit3 : GVIF3RX2_FAIL

This bit indicates the communication status of the GVIF3 transmitter 2.

0: Normal
1: Fail

For Desay

Error Status Monitor - 7 : Error status monitor 7 (bank0,0x1A,R)

This register indicates the error occurs in this GVIF3 device.

Once an error occurs, these registers keep high level until they are cleared.

This register can be cleared by the ERROR_CLEAR register.

The status of the GVIF3 device is changed and some errors may occur when other registers are set. This register must be cleared when other registers are set.

7	6	5	4	3	2	1	0
—	—	—	—	GVIF3RX 3_FAIL	—	—	—
R-x	R-x	R-x	R-x	R-0	R-x	R-x	R-x

Bit3 : GVIF3RX3_FAIL

This bit indicates the communication status of the GVIF3 transmitter 3.

0: Normal
1: Fail

For Desay

Error Status Monitor - 12 : Error status monitor 12 (bank0,0x1B,R)

This register indicates the error occurs in this GVIF3 device.

Once an error occurs, these registers keep high level until they are cleared.

This register can be cleared by the ERROR_CLEAR register.

The status of the GVIF3 device is changed and some errors may occur when other registers are set. This register must be cleared when other registers are set.

7	6	5	4	3	2	1	0
AUX_0_I2C_FAIL	—	—	—	—	—	—	—
R-0	R-x	R-x	R-x	R-x	R-x	R-x	R-x

Bit7 : AUX_0_I2C_FAIL

This bit indicates the communication status of the Aux data transmission (I2C). (Port 0)

0: Normal
1: Fail

For Desay

Error Status Monitor - 13 : Error status monitor 13 (bank0,0x1C,R)

This register indicates the error occurs in this GVIF3 device.

Once an error occurs, these registers keep high level until they are cleared.

This register can be cleared by the ERROR_CLEAR register.

The status of the GVIF3 device is changed and some errors may occur when other registers are set. This register must be cleared when other registers are set.

7	6	5	4	3	2	1	0
UNLOADER_1_FAIL	—	—	—	—	—	—	—
R-0	R-x	R-x	R-x	R-x	R-x	R-x	R-x

Bit7 : UNLOADER_1_FAIL

This bit indicates the status of Unloaders which are connected to video output port (Port 1).

0: Normal
1: Fail

For Desay

Interrupt Setup - 5 : Interrupt setup 5 (bank0,0x1E,RW)

This register controls whether the logical value of each bit in the Error Status Monitor - 5 register is output to INTERRUPT signal and register. INTERRUPT signal can be assigned to GENERAL_IO[*:0] pin.

7	6	5	4	3	2	1	0
NOTIFY_ GVIF3RX 1_FAIL	—	—	—	—	—	—	—
RW-1	RW-0	RW-0	RW-0	RW-0	RW-0	RW-0	RW-0

Bit7 : NOTIFY_GVIF3RX1_FAIL

This bit sets the notification of the GVIF3RX1_FAIL register.

0: Not notified
1: Notified

For Desay

Interrupt Setup - 1 : Interrupt setup 1 (bank0,0x1F,RW)

This register controls whether the logical value of each bit in the Error Status Monitor - 1 register is output to INTERRUPT signal and register. INTERRUPT signal can be assigned to GENERAL_IO[*:0] pin.

7	6	5	4	3	2	1	0
NOTIFY_GVIF3TX0_FAIL	—	—	—	—	—	—	—
RW-1	RW-0	RW-0	RW-0	RW-0	RW-0	RW-0	RW-0

Bit7 : NOTIFY_GVIF3TX0_FAIL

This bit sets the notification of the GVIF3TX0_FAIL register.

0: Not notified
1: Notified

For Desay

Interrupt Setup - 2 : Interrupt setup 2 (bank0,0x20,RW)

This register controls whether the logical value of each bit in the Error Status Monitor - 2 register is output to INTERRUPT signal and register. INTERRUPT signal can be assigned to GENERAL_IO[*:0] pin.

7	6	5	4	3	2	1	0
NOTIFY_GVIF3RX0_FAIL	—	—	—	—	—	—	—
RW-1	RW-0	RW-0	RW-0	RW-0	RW-0	RW-0	RW-0

Bit7 : NOTIFY_GVIF3RX0_FAIL

This bit sets the notification of the GVIF3RX0_FAIL register.

0: Not notified
1: Notified

For Desay

Interrupt Setup - 8 : Interrupt setup 8 (bank0,0x21,RW)

This register controls whether the logical value of each bit in the Error Status Monitor - 8 register is output to INTERRUPT signal and register. INTERRUPT signal can be assigned to GENERAL_IO[*:0] pin.

7	6	5	4	3	2	1	0
NOTIFY_UNLOADER_0_FAIL	—	—	—	—	—	—	—
RW-1	RW-0	RW-0	RW-0	RW-0	RW-0	RW-0	RW-0

Bit7 : NOTIFY_UNLOADER_0_FAIL

This bit sets the notification of the UNLOADER_0_FAIL register.

0: Not notified
1: Notified

For Desay

Interrupt Setup - 10 : Interrupt setup 10 (bank0,0x22,RW)

This register controls whether the logical value of each bit in the Error Status Monitor - 10 register is output to INTERRUPT signal and register. INTERRUPT signal can be assigned to GENERAL_IO[*:0] pin.

7	6	5	4	3	2	1	0
NOTIFY_ DAISY0_ FAIL	—	NOTIFY_ DAISY1_ FAIL	—	—	—	—	—
RW-0	RW-0	RW-0	RW-0	RW-0	RW-0	RW-0	RW-0

Bit7 : NOTIFY_DAISY0_FAIL

This bit sets the notification of the DAISY0_FAIL register.

0: Not notified
1: Notified

Bit5 : NOTIFY_DAISY1_FAIL

This bit sets the notification of the DAISY1_FAIL register.

0: Not notified
1: Notified

For Desay

Interrupt Setup - 6 : Interrupt setup 6 (bank0,0x26,RW)

This register controls whether the logical value of each bit in the Error Status Monitor - 6 register is output to INTERRUPT signal and register. INTERRUPT signal can be assigned to GENERAL_IO[*:0] pin.

7	6	5	4	3	2	1	0
—	—	—	—	NOTIFY_ GVIF3RX 2_FAIL	—	—	—
RW-0	RW-0	RW-0	RW-0	RW-1	RW-0	RW-0	RW-0

Bit3 : NOTIFY_GVIF3RX2_FAIL

This bit sets the notification of the GVIF3RX2_FAIL register.

0: Not notified
1: Notified

For Desay

Interrupt Setup - 7 : Interrupt setup 7 (bank0,0x28,RW)

This register controls whether the logical value of each bit in the Error Status Monitor - 7 register is output to INTERRUPT signal and register. INTERRUPT signal can be assigned to GENERAL_IO[*:0] pin.

7	6	5	4	3	2	1	0
—	—	—	—	NOTIFY_ GVIF3RX 3_FAIL	—	—	—
RW-0	RW-0	RW-0	RW-0	RW-1	RW-0	RW-0	RW-0

Bit3 : NOTIFY_GVIF3RX3_FAIL

This bit sets the notification of the GVIF3RX3_FAIL register.

0: Not notified
1: Notified

For Desay

Interrupt Setup - 12 : Interrupt setup 12 (bank0,0x29,RW)

This register controls whether the logical value of each bit in the Error Status Monitor - 12 register is output to INTERRUPT signal and register. INTERRUPT signal can be assigned to GENERAL_IO[*:0] pin.

7	6	5	4	3	2	1	0
NOTIFY_AUX_0_I2C_FAIL	—	—	—	—	—	—	—
RW-0	RW-0	RW-0	RW-0	RW-0	RW-0	RW-0	RW-0

Bit7 : NOTIFY_AUX_0_I2C_FAIL

This bit sets the notification of the AUX_0_I2C_FAIL register.

0: Not notified
1: Notified

For Desay

Interrupt Setup - 13 : Interrupt setup 13 (bank0,0x2A,RW)

This register controls whether the logical value of each bit in the Error Status Monitor - 13 register is output to INTERRUPT signal and register. INTERRUPT signal can be assigned to GENERAL_IO[*:0] pin.

7	6	5	4	3	2	1	0
NOTIFY_UNLOADER_1_FAIL	—	—	—	—	—	—	—
RW-1	RW-0	RW-0	RW-0	RW-0	RW-0	RW-0	RW-0

Bit7 : NOTIFY_UNLOADER_1_FAIL

This bit sets the notification of the UNLOADER_1_FAIL register.

0: Not notified
1: Notified

For Desay

Error Status Setup : Error status setup (bank0,0x2E,RW)

This register controls the Error Status Monitor - * register.

7	6	5	4	3	2	1	0
—	—	—	—	—	—	—	ERROR_ CLEAR
RW-0	RW-0	RW-0	RW-0	RW-0	RW-0	RW-0	RW-0

Bit0 : ERROR_CLEAR

This bit clears the Error Status Monitor - * register.

This bit should be set to “ 0 ” after it is set to “ 1 ” and the error status is cleared. When this bit is “ 1 ” , it continues to clear the error status.

0: Not clear
1: Clear

For Desay

Error Status Monitor - 14 : Error status monitor 14 (bank0,0x40,R)

This register indicates the error occurs in this GVIF3 device.

Once an error occurs, these registers keep high level until they are cleared.

This register can be cleared by the ERROR_CLEAR register.

The status of the GVIF3 device is changed and some errors may occur when other registers are set. This register must be cleared when other registers are set.

7	6	5	4	3	2	1	0
—	—	—	—	DAISY2_ FAIL	—	DAISY3_ FAIL	—
R-x	R-x	R-x	R-x	R-0	R-x	R-0	R-x

Bit3 : DAISY2_FAIL

This bit indicates the multiplexing status in the daisy chain connection .

(Connection path: GVIF3 receiver 2 to GVIF3 transmitter 0)

0: Normal
1: Fail

Bit1 : DAISY3_FAIL

This bit indicates the multiplexing status in the daisy chain connection .

(Connection path: GVIF3 receiver 3 to GVIF3 transmitter 0)

0: Normal
1: Fail

For Desay

Error Status Monitor - 17 : Error status monitor 17 (bank0,0x46,R)

This register indicates the error occurs in this GVIF3 device.

Once an error occurs, these registers keep high level until they are cleared.

This register can be cleared by the ERROR_CLEAR register.

The status of the GVIF3 device is changed and some errors may occur when other registers are set. This register must be cleared when other registers are set.

7	6	5	4	3	2	1	0
AUX_1_I2C_FAIL	—	—	—	—	—	—	—
R-0	R-x	R-x	R-x	R-x	R-x	R-x	R-x

Bit7 : AUX_1_I2C_FAIL

This bit indicates the communication status of the Aux data transmission (I2C). (Port 1)

0: Normal
1: Fail

For Desay

Interrupt Setup - 14 : Interrupt setup 14 (bank0,0x4D,RW)

This register controls whether the logical value of each bit in the Error Status Monitor - 14 register is output to INTERRUPT signal and register. INTERRUPT signal can be assigned to GENERAL_IO[*:0] pin.

7	6	5	4	3	2	1	0
—	—	—	—	NOTIFY_ DAISY2_ FAIL	—	NOTIFY_ DAISY3_ FAIL	—
RW-0	RW-0	RW-0	RW-0	RW-0	RW-0	RW-0	RW-0

Bit3 : NOTIFY_DAISY2_FAIL

This bit sets the notification of the DAISY2_FAIL register.

0: Not notified
1: Notified

Bit1 : NOTIFY_DAISY3_FAIL

This bit sets the notification of the DAISY3_FAIL register.

0: Not notified
1: Notified

For Desay

Interrupt Setup - 17 : Interrupt setup 17 (bank0,0x53,RW)

This register controls whether the logical value of each bit in the Error Status Monitor - 17 register is output to INTERRUPT signal and register. INTERRUPT signal can be assigned to GENERAL_IO[*:0] pin.

7	6	5	4	3	2	1	0
NOTIFY_AUX_1_I2C_FAIL	—	—	—	—	—	—	—
RW-0	RW-0	RW-0	RW-0	RW-0	RW-0	RW-0	RW-0

Bit7 : NOTIFY_AUX_1_I2C_FAIL

This bit sets the notification of the AUX_1_I2C_FAIL register.

0: Not notified
1: Notified

For Desay

GVIF3 Transmitter 0 Setup - 1 : GVIF3 transmitter 0 setup 1 (bank0,0x60,RW)

This register controls the setting of GVIF3 transmitter.

7	6	5	4	3	2	1	0
GVIF3TX0_SPEED[3:0]				GVIF3TX0_FAIL_MASK_INTERVAL_ENABLE	GVIF3TX0_POL_INVERT	—	GVIF3TX0_ENABLE
RW-0	RW-0	RW-0	RW-1	RW-0	RW-0	RW-1	RW-1

Bit7-4 : GVIF3TX0_SPEED

These bits set the data rate of serial output (downstream) of the GVIF3 transmitter 0. These bits should be set according to the data rate setting in the GVIF*RX*_SPEED register in GVIF device which is connected to the GVIF3 transmitter 0.

When the upstream GVIF device changes these bits with the register remote access function, these bits should be set after the data rate setting of the GVIF*RX*_SPEED register in GVIF device which is connected to the GVIF3 transmitter 0 is completed.

When the downstream GVIF device changes these bits with the register remote access function, these bits should be set before the data rate setting of the GVIF*RX*_SPEED register in GVIF device which is connected to the GVIF3 transmitter 0 is completed.

0000 : Reserved
0001 : 2.4 Gbps
0010 : 3.6 Gbps
0011 : 4.8 Gbps
0100 : 6.0 Gbps
0101 : 7.2 Gbps
0110 : 8.4 Gbps
0111 : 9.6 Gbps
1000 : 10.8 Gbps
1001 : 12.0 Gbps
1010-1111 : Reserved

Bit3 : GVIF3TX0_FAIL_MASK_INTERVAL_ENABLE

This bit enables or disables the error detection frequency setting of the GVIF3 transmitter 0.

0: Disable
1: Enable

Bit2 : GVIF3TX0_POL_INVERT

This bit sets the polarity of serial input / output pin of the GVIF3 transmitter 0.

When a coaxial cable is used, this bit must be set to " 0 ".

0: Not invert (the same as the pin name)
1: Invert

Bit0 : GVIF3TX0_ENABLE

This bit enables or disables the GVIF3 transmitter 0.

0: Disable
1: Enable

For Desay

GVIF3 Transmitter 0 Monitor - 1 : GVIF3 transmitter 0 monitor 1 (bank0,0x7C,R)

This register indicates the status of GVIF3 transmitter.

7	6	5	4	3	2	1	0
—	—	—	—	—	GVIF3TX0_BC_LOS	—	—
R-x	R-x	R-x	R-x	R-x	R-0	R-x	R-x

Bit2 : GVIF3TX0_BC_LOS

This bit indicates the signal reception status of the GVIF3 transmitter 0 in the upstream communication.

0: Normal
1: Loss of signal

For Desay

GVIF3 Transmitter 0 Setup - 6 : GVIF3 transmitter 0 setup 6 (bank0,0x7D,RW)

This register controls the setting of GVIF3 transmitter.

7	6	5	4	3	2	1	0
GVIF3TX0_BC_TEST_ENABLE	—	—	—	—	—	—	—
RW-0	RW-0	RW-0	RW-0	RW-0	RW-0	RW-0	RW-0

Bit7 : GVIF3TX0_BC_TEST_ENABLE

This bit enables or disables the upstream communication test of the GVIF3 transmitter 0.

0: Disable
1: Enable

For Desay

GVIF3 Transmitter 0 Monitor - 2 : GVIF3 transmitter 0 monitor 2 (bank0,0x7F,R)

This register indicates the status of GVIF3 transmitter.

7	6	5	4	3	2	1	0
GVIF3TX0_BC_TEST_COMPLETE	—	—	GVIF3TX0_BC_TEST_VMARGIN[4:0]				
R-0	R-x	R-x	R-0	R-0	R-0	R-0	R-0

Bit7 : GVIF3TX0_BC_TEST_COMPLETE

This bit indicates the completion of the upstream communication test of the GVIF3 transmitter 0.

0: Not completed
1: Complete

Bit4-0 : GVIF3TX0_BC_TEST_VMARGIN

These bits indicate the value of VMARGIN parameter in the upstream communication test of the GVIF3 transmitter 0.

For Desay

GVIF3 Receiver 0 Setup - 1 : GVIF3 receiver 0 setup 1 (bank0,0x80,RW)

This register controls the setting of GVIF3 receiver.

7	6	5	4	3	2	1	0
GVIF3RX0_POL_INVERT	—	—	—	—	GVIF3RX0_FAIL_MASK_INTERVAL_ENABLE	—	GVIF3RX0_ENABLE
RW-0	RW-0	RW-0	RW-0	RW-1	RW-0	RW-1	RW-1

Bit7 : GVIF3RX0_POL_INVERT

This bit sets the polarity of serial input / output pin of the GVIF3 receiver 0.

When a coaxial cable is used, this bit must be set to " 0 ".

0: Not invert (the same as the pin name)
1: Invert

Bit2 : GVIF3RX0_FAIL_MASK_INTERVAL_ENABLE

This bit enables or disables the error detection frequency setting of the GVIF3 receiver 0.

0: Disable
1: Enable

Bit0 : GVIF3RX0_ENABLE

This bit enables or disables the GVIF3 receiver 0.

0: Disable
1: Enable

For Desay

GVIF3 Receiver 0 Setup - 2 : GVIF3 receiver 0 setup 2 (bank0,0x83,RW)

This register controls the setting of GVIF3 receiver.

7	6	5	4	3	2	1	0
—	—	—	GVIF3RX0_SPEED[4:0]				
RW-0	RW-0	RW-0	RW-0	RW-0	RW-0	RW-0	RW-0

Bit4-0 : GVIF3RX0_SPEED

These bits set the data rate of serial input (downstream) of the GVIF3 receiver 0. These bits should be set according to the data rate setting in the GVIF*TX*_SPEED register in GVIF device which is connected to the GVIF3 receiver 0.

When the downstream GVIF device changes these bits with the register remote access function, these bits should be set after the data rate setting of the GVIF*TX*_SPEED register in GVIF device which is connected to the GVIF3 receiver 0 is completed.

When the upstream GVIF device changes these bits with the register remote access function, these bits should be set before the data rate setting of the GVIF*TX*_SPEED register in GVIF device which is connected to the GVIF3 receiver 0 is completed.

00000: 2.4 Gbps, 3.6 Gbps, 4.8 Gbps
00001-10011: Reserved
10100: 6.0 Gbps
10101: 7.2 Gbps
10110: 8.4 Gbps
10111: 9.6 Gbps
11000: 10.8 Gbps
11001: 12.0 Gbps
11010-11111: Reserved

For Desay

GVIF3 Receiver 0 Setup - 6 : GVIF3 receiver 0 setup 6 (bank0,0x86,RW)

This register controls the setting of GVIF3 receiver.

7	6	5	4	3	2	1	0
—	—	—	—	—	—	—	GVIF3RX0_FC_TEST_ENABLE
RW-0	RW-0	RW-0	RW-0	RW-0	RW-0	RW-0	RW-0

Bit0 : GVIF3RX0_FC_TEST_ENABLE

This bit enables or disables the downstream communication test of the GVIF3 receiver 0.

0: Disable
1: Enable

For Desay

GVIF3 Receiver 0 Monitor - 1 : GVIF3 receiver 0 monitor 1 (bank0,0x88,R)

This register indicates the status of GVIF3 receiver.

7	6	5	4	3	2	1	0
GVIF3RX0_FC_TEST_VMARGIN[7:0]							
R-0	R-0	R-0	R-0	R-0	R-0	R-0	R-0

Bit7-0 : GVIF3RX0_FC_TEST_VMARGIN

These bits indicate the value of VMARGIN parameter in the downstream communication test of the GVIF3 receiver 0.

For Desay

GVIF3 Receiver 0 Monitor - 2 : GVIF3 receiver 0 monitor 2 (bank0,0x8A,R)

This register indicates the status of GVIF3 receiver.

7	6	5	4	3	2	1	0
—	—	—	—	—	—	GVIF3RX0_FC_TEST_COMPLETE	GVIF3RX0_FC_TEST_ERROR
R-x	R-x	R-x	R-x	R-x	R-x	R-0	R-0

Bit1 : GVIF3RX0_FC_TEST_COMPLETE

This bit indicates the completion of the downstream communication test of the GVIF3 receiver 0.

0: Not completed
1: Complete

Bit0 : GVIF3RX0_FC_TEST_ERROR

This bit indicates the downstream communication test status of the GVIF3 receiver 0.

0: No error
1: Error

For Desay

GVIF3 Transmitter 0 Setup - 2 : GVIF3 transmitter 0 setup 2 (bank0,0x8E,RW)

This register controls the setting of GVIF3 transmitter.

7	6	5	4	3	2	1	0
GVIF3TX0_FAIL_MASK_INTERVAL[7:0]							
RW-0	RW-0	RW-0	RW-0	RW-0	RW-0	RW-0	RW-0

Bit7-0 : GVIF3TX0_FAIL_MASK_INTERVAL

These bits set the error detection frequency of the GVIF3 transmitter 0.

The GVIF3TX0_FAIL_MASK_INTERVAL_ENABLE register need to be set.

The value equal to or greater than 1 should be set.

READY can be " 0 " during the error masked period.

The error masked period is (50 ns +/- 10 %) × 8 × GVIF3TX0_FAIL_MASK_INTERVAL.

For Desay

GVIF3 Receiver 0 Setup - 4 : GVIF3 receiver 0 setup 4 (bank0,0x90,RW)

This register controls the setting of GVIF3 receiver.

7	6	5	4	3	2	1	0
GVIF3RX0_FAIL_MASK_INTERVAL[7:0]							
RW-0	RW-0	RW-0	RW-0	RW-0	RW-0	RW-0	RW-0

Bit7-0 : GVIF3RX0_FAIL_MASK_INTERVAL

These bits set the error detection frequency of the GVIV3 receiver 0.

The GVIF3RX0_FAIL_MASK_INTERVAL_ENABLE register need to be set.

The value equal to or greater than 1 should be set.

READY can be " 0 " during the error masked period.

The error masked period is (50 ns +/- 10 %) × 8 × GVIF3RX0_FAIL_MASK_INTERVAL.

For Desay

GVIF3 Receiver 1 Setup - 4 : GVIF3 receiver 1 setup 4 (bank0,0x91,RW)

This register controls the setting of GVIF3 receiver.

7	6	5	4	3	2	1	0
GVIF3RX1_FAIL_MASK_INTERVAL[7:0]							
RW-0	RW-0	RW-0	RW-0	RW-0	RW-0	RW-0	RW-0

Bit7-0 : GVIF3RX1_FAIL_MASK_INTERVAL

These bits set the error detection frequency of the GVIV3 receiver 1.

The GVIF3RX1_FAIL_MASK_INTERVAL_ENABLE register need to be set.

The value equal to or greater than 1 should be set.

READY can be " 0 " during the error masked period.

The error masked period is (50 ns +/- 10 %) × 8 × GVIF3RX1_FAIL_MASK_INTERVAL.

For Desay

Shared Pin Setup - 1 : Shared pin setup 1 (bank0,0x97,RW)

This register controls the setting of shared pins.

7	6	5	4	3	2	1	0
IO_AUX_I2C_SELECT	—	IO_READY_SELECT	—	IO_INTERRUPT_SELECT	—	IO_FRAME_SYNC_SELECT	IO_MASTER_CLK_SELECT
RW-0	RW-0	RW-0	RW-0	RW-0	RW-0	RW-0	RW-0

Bit7 : IO_AUX_I2C_SELECT

This bit sets the assignment of Aux signals (I2C) for shared pins.

Only either the IO_AUX_SPI_SELECT or IO_AUX_I2C_SELECT register can be set to " 1 ".

0: Not assign
1: Assign

Bit5 : IO_READY_SELECT

This bit sets the assignment of READY signals for shared pins.

0: Not assign
1: Assign

Bit3 : IO_INTERRUPT_SELECT

This bit sets the assignment of INTERRUPT signals for shared pins.

0: Not assign
1: Assign

Bit1 : IO_FRAME_SYNC_SELECT

This bit sets the assignment of FRAME_SYNC signal for shared pins.

0: Not assign
1: Assign

Bit0 : IO_MASTER_CLK_SELECT

This bit sets the assignment of MASTER_CLK signal for shared pins.

0: Not assign
1: Assign

For Desay

Shared Pin Setup - 2 : Shared pin setup 2 (bank0,0x98,RW)

This register controls the setting of shared pins.

7	6	5	4	3	2	1	0
—	—	—	—	—	—	—	IO_ENABLE
RW-0	RW-0	RW-0	RW-0	RW-0	RW-0	RW-0	RW-0

Bit0 : IO_ENABLE

This bit enables or disables signal assignment of shared pins.

This bit must be set after setting other registers of the Shared Pin Setup - * registers.

0: Disable
1: Enable

For Desay

Unloader Common Setup - 3 : Unloader common setup 3 (bank0,0x9A,RW)

This register controls the setting of the video data transmission.

7	6	5	4	3	2	1	0
MIPI_TX1_HALFRATE_MODE_ENABLE[3:0]				MIPI_TX0_HALFRATE_MODE_ENABLE[3:0]			
RW-0	RW-0	RW-0	RW-0	RW-0	RW-0	RW-0	RW-0

Bit7-4 : MIPI_TX1_HALFRATE_MODE_ENABLE

These bits enable or disable the half rate mode of MIPI output (Port 1).

0000: Disable
0010: Enable

Bit3-0 : MIPI_TX0_HALFRATE_MODE_ENABLE

These bits enable or disable the half rate mode of MIPI output (Port 0).

0000: Disable
0010: Enable

For Desay

Unloader Common Setup - 1 : Unloader common setup 1 (bank0,0x9B,RW)

This register controls the setting of the video data transmission.

7	6	5	4	3	2	1	0
—	MIPI_TX1_REFCLK_SELECT[2:0]			—	MIPI_TX0_REFCLK_SELECT[2:0]		
RW-0	RW-0	RW-0	RW-0	RW-0	RW-0	RW-0	RW-0

Bit6-4 : MIPI_TX1_REFCLK_SELECT

These bits set the module number of Unloader which provides the reference clock for MIPI output (Port 1).

Bit2-0 : MIPI_TX0_REFCLK_SELECT

These bits set the module number of Unloader which provides the reference clock for MIPI output (Port 0).

For Desay

Unloader Common Setup - 2 : Unloader common setup 2 (bank0,0x9C,RW)

This register controls the setting of the video data transmission.

7	6	5	4	3	2	1	0
MIPI_TX0_CLK_FIXED_MODE	MIPI_TX0_CLK_CONTINUATION_MODE	—	—	MIPI_TX1_CLK_FIXED_MODE	MIPI_TX1_CLK_CONTINUATION_MODE	VIDEO_OUTPUT_ENABLE_1	VIDEO_OUTPUT_ENABLE_0
RW-0	RW-0	RW-0	RW-0	RW-0	RW-0	RW-0	RW-0

Bit7 : MIPI_TX0_CLK_FIXED_MODE

This bit sets the way of MIPI output clock generation (Port 0).

0: Clock regenerated mode (the clock is regenerated from video data.)
1: Clock fixed mode

Bit6 : MIPI_TX0_CLK_CONTINUATION_MODE

This bit enables or disables the clock continuation mode of MIPI output clock (Port 0).

When the clock continuation mode is enabled, the clock fixed mode should be set.

0: Disable
1: Enable

Bit3 : MIPI_TX1_CLK_FIXED_MODE

This bit sets the way of MIPI output clock generation (Port 1).

0: Clock regenerated mode (the clock is regenerated from video data.)
1: Clock fixed mode

Bit2 : MIPI_TX1_CLK_CONTINUATION_MODE

This bit enables or disables the clock continuation mode of MIPI output clock (Port 1).

When the clock continuation mode is enabled, the clock fixed mode should be set.

0: Disable
1: Enable

Bit1 : VIDEO_OUTPUT_ENABLE_1

This bit enables or disables to output the video data. (Port 1)

0: Disable
1: Enable

Bit0 : VIDEO_OUTPUT_ENABLE_0

This bit enables or disables to output the video data. (Port 0)

0: Disable
1: Enable

For Desay

GVIF3 Receiver 0 Setup - 7 : GVIF3 receiver 0 setup 7 (bank0,0x9D,RW)

This register controls the setting of GVIF3 receiver.

7	6	5	4	3	2	1	0
GVIF3RX0_DROP_SOURCE_DATA_GVIFID_0[7:0]							
RW-1	RW-1	RW-1	RW-1	RW-1	RW-1	RW-1	RW-1

Bit7-0 : GVIF3RX0_DROP_SOURCE_DATA_GVIFID_0

These bits set the GVIFID (video stream GVIFID) of received video data at the GVIF3 receiver 0 to be deleted from GVIF3 transmitter output to the downstream GVIF3 device.

Deleted video data is not transmitted to the downstream GVIF devices in the daisy chain.

For Desay

Unloader 0 Setup - 1 : Unloader 0 setup 1 (bank0,0x9E,RW)

This register controls the setting of the video data transmission.

7	6	5	4	3	2	1	0
UNLOADER0_GVIF3RX_PORT_SELECT[1:0]		—	—	UNLOADER0_ECC_CRC_OVR_ENABLE	UNLOADER0_VIDEO_MUTE	—	UNLOADER0_SELECT
RW-0	RW-0	RW-0	RW-1	RW-0	RW-0	RW-0	RW-1

Bit7-6 : UNLOADER0_GVIF3RX_PORT_SELECT

These bits set the port number of GVIF3 receiver to be connected to the Unloader 0.

Bit3 : UNLOADER0_ECC_CRC_OVR_ENABLE

This bit enables or disables the ECC/CRC recalculation of the input video data which is stored in the Unloader 0.

When the frame extended mode is enable in serializer and the mute in the Unloader 0 turns on, this bit must be set to " 1 " prior to setting the VIDEO_OUTPUT_ENABLE_* register to " 1 ".

0: Disable
1: Enable

Bit2 : UNLOADER0_VIDEO_MUTE

This bit sets the mute of the input video data which is stored in the Unloader 0.

When the mute turns on, the black screen is transmitted instead of the input video data.

0: Mute OFF
1: Mute ON

Bit0 : UNLOADER0_SELECT

This bit enables or disables the Unloader 0.

0: Disable
1: Enable

For Desay

Unloader 0 Setup - 2 : Unloader 0 setup 2 (bank0,0x9F,RW)

This register controls the setting of the video data transmission.

7	6	5	4	3	2	1	0
UNLOADER0_TARGET_GVIFID[7:0]							
RW-0	RW-0	RW-0	RW-0	RW-0	RW-0	RW-0	RW-0

Bit7-0 : UNLOADER0_TARGET_GVIFID

These bits set the GVIFID (video stream GVIFID) of the input video data to be stored in the Unloader 0.

For Desay

Unloader 0 Monitor - 1 : Unloader 0 monitor 1 (bank0,0xA0,R)

This register indicates the status of the video data transmission.

7	6	5	4	3	2	1	0
UNLOADER0_GVIF_FORMAT[7:0]							
R-0	R-0	R-0	R-0	R-0	R-0	R-0	R-0

Bit7-0 : UNLOADER0_GVIF_FORMAT

These bits indicate the GVIF Format of the input video data which was stored in the Unloader 0.

0000 0001: RGB888 (When the video input interface in serializer is except for MIPI D-PHY CSI-2.)
0000 0010: RGB888 (When the video input interface in serializer is MIPI D-PHY CSI-2.)
0000 1000: YCbCr422 (YUV)
0001 0001: RAW8
0001 0010: RAW10
0001 0011: RAW12
0001 0100: RAW16
0001 0101: RAW20
0001 0110: The frame extended mode
1111 1111: Default

Others: Reserved

For Desay

Unloader 0 Setup - 3 : Unloader 0 setup 3 (bank0,0xA2,RW)

This register controls the setting of the video data transmission.

7	6	5	4	3	2	1	0
UNLOADER0_MIPITX_VCID_SELECT_0[3:0]				UNLOADER0_MIPITX_VCID_SELECT_0_ENABLE	UNLOADER0_MIPITX_VCID_OVR_0_ENABLE	—	—
RW-0	RW-0	RW-0	RW-0	RW-0	RW-0	RW-0	RW-0

Bit7-4 : UNLOADER0_MIPITX_VCID_SELECT_0

These bits set the Virtual Channel ID of the video data to be output from the Unloader 0.

Bit3 : UNLOADER0_MIPITX_VCID_SELECT_0_ENABLE

This bit enables the output setting of Virtual Channel ID number which is set by the UNLOADER0_MIPITX_VCID_SELECT_0 register.

When this bit is not enabled, the received data of all Virtual Channel ID is output.

0: Disable the output setting of Virtual Channel ID
1: Enable the output setting of Virtual Channel ID

Bit2 : UNLOADER0_MIPITX_VCID_OVR_0_ENABLE

This bit enables or disables the override-setting of Virtual Channel ID number in the Unloader 0.

0: Disable
1: Enable

For Desay

Unloader 0 Setup - 4 : Unloader 0 setup 4 (bank0,0xA4,RW)

This register controls the setting of the video data transmission.

7	6	5	4	3	2	1	0
UNLOADER0_MIPITX_VCID_SELECT_1[3:0]				UNLOADER0_MIPITX_VCID_SELECT_1_ENABLE	—	—	—
RW-0	RW-0	RW-0	RW-0	RW-0	RW-0	RW-1	RW-1

Bit7-4 : UNLOADER0_MIPITX_VCID_SELECT_1

These bits set the Virtual Channel ID of the video data to be output from the Unloader 0.

Bit3 : UNLOADER0_MIPITX_VCID_SELECT_1_ENABLE

This bit enables the output setting of Virtual Channel ID number which is set by the UNLOADER0_MIPITX_VCID_SELECT_1 register.

When this bit is not enabled, the received data of all Virtual Channel ID is output.

0: Disable the output setting of Virtual Channel ID
1: Enable the output setting of Virtual Channel ID

For Desay

Unloader 1 Setup - 1 : Unloader 1 setup 1 (bank0,0xA7,RW)

This register controls the setting of the video data transmission.

7	6	5	4	3	2	1	0
UNLOADER1_GVIF3RX_PORT_SELECT[1:0]		—	—	UNLOADER1_ECC_CRC_OVR_ENABLE	UNLOADER1_VIDEO_MUTE	—	UNLOADER1_SELECT
RW-0	RW-0	RW-0	RW-1	RW-0	RW-0	RW-0	RW-1

Bit7-6 : UNLOADER1_GVIF3RX_PORT_SELECT

These bits set the port number of GVIF3 receiver to be connected to the Unloader 1.

Bit3 : UNLOADER1_ECC_CRC_OVR_ENABLE

This bit enables or disables the ECC/CRC recalculation of the input video data which is stored in the Unloader 1.

When the frame extended mode is enable in serializer and the mute in the Unloader 1 turns on, this bit must be set to " 1 " prior to setting the VIDEO_OUTPUT_ENABLE_* register to " 1 ".

0: Disable
1: Enable

Bit2 : UNLOADER1_VIDEO_MUTE

This bit sets the mute of the input video data which is stored in the Unloader 1.

When the mute turns on, the black screen is transmitted instead of the input video data.

0: Mute OFF
1: Mute ON

Bit0 : UNLOADER1_SELECT

This bit enables or disables the Unloader 1.

0: Disable
1: Enable

For Desay

Unloader 1 Setup - 2 : Unloader 1 setup 2 (bank0,0xA8,RW)

This register controls the setting of the video data transmission.

7	6	5	4	3	2	1	0
UNLOADER1_TARGET_GVIFID[7:0]							
RW-0	RW-0	RW-0	RW-0	RW-0	RW-0	RW-0	RW-0

Bit7-0 : UNLOADER1_TARGET_GVIFID

These bits set the GVIFID (video stream GVIFID) of the input video data to be stored in the Unloader 1.

For Desay

Unloader 1 Monitor - 1 : Unloader 1 monitor 1 (bank0,0xA9,R)

This register indicates the status of the video data transmission.

7	6	5	4	3	2	1	0
UNLOADER1_GVIF_FORMAT[7:0]							
R-0	R-0	R-0	R-0	R-0	R-0	R-0	R-0

Bit7-0 : UNLOADER1_GVIF_FORMAT

These bits indicate the GVIF Format of the input video data which was stored in the Unloader 1.

0000 0001: RGB888 (When the video input interface in serializer is except for MIPI D-PHY CSI-2.)
0000 0010: RGB888 (When the video input interface in serializer is MIPI D-PHY CSI-2.)
0000 1000: YCbCr422 (YUV)
0001 0001: RAW8
0001 0010: RAW10
0001 0011: RAW12
0001 0100: RAW16
0001 0101: RAW20
0001 0110: The frame extended mode
1111 1111: Default

Others: Reserved

For Desay

Unloader 1 Setup - 3 : Unloader 1 setup 3 (bank0,0xAB,RW)

This register controls the setting of the video data transmission.

7	6	5	4	3	2	1	0
UNLOADER1_MIPITX_VCID_SELECT_0[3:0]				UNLOADER1_MIPITX_VCID_SELECT_0_ENABLE	UNLOADER1_MIPITX_VCID_OVR_0_ENABLE	—	—
RW-0	RW-0	RW-0	RW-0	RW-0	RW-0	RW-0	RW-0

Bit7-4 : UNLOADER1_MIPITX_VCID_SELECT_0

These bits set the Virtual Channel ID of the video data to be output from the Unloader 1.

Bit3 : UNLOADER1_MIPITX_VCID_SELECT_0_ENABLE

This bit enables the output setting of Virtual Channel ID number which is set by the UNLOADER1_MIPITX_VCID_SELECT_0 register.

When this bit is not enabled, the received data of all Virtual Channel ID is output.

0: Disable the output setting of Virtual Channel ID
1: Enable the output setting of Virtual Channel ID

Bit2 : UNLOADER1_MIPITX_VCID_OVR_0_ENABLE

This bit enables or disables the override-setting of Virtual Channel ID number in the Unloader 1.

0: Disable
1: Enable

For Desay

Unloader 1 Setup - 4 : Unloader 1 setup 4 (bank0,0xAD,RW)

This register controls the setting of the video data transmission.

7	6	5	4	3	2	1	0
UNLOADER1_MIPITX_VCID_SELECT_1[3:0]				UNLOADER1_MIPITX_VCID_SELECT_1_ENABLE	—	—	—
RW-0	RW-0	RW-0	RW-0	RW-0	RW-0	RW-1	RW-1

Bit7-4 : UNLOADER1_MIPITX_VCID_SELECT_1

These bits set the Virtual Channel ID of the video data to be output from the Unloader 1.

Bit3 : UNLOADER1_MIPITX_VCID_SELECT_1_ENABLE

This bit enables the output setting of Virtual Channel ID number which is set by the UNLOADER1_MIPITX_VCID_SELECT_1 register.

When this bit is not enabled, the received data of all Virtual Channel ID is output.

0: Disable the output setting of Virtual Channel ID
1: Enable the output setting of Virtual Channel ID

For Desay

Daisy Chain Setup - 1 : Daisy chain setup 1 (bank0,0xD6,RW)

This register controls the setting of the daisy chain connection.

7	6	5	4	3	2	1	0
—	—	—	—	DAISY_GVIF3TRX3_SELECT	DAISY_GVIF3TRX2_SELECT	DAISY_GVIF3TRX1_SELECT	DAISY_GVIF3TRX0_SELECT
RW-0	RW-0	RW-0	RW-0	RW-0	RW-0	RW-0	RW-0

Bit3 : DAISY_GVIF3TRX3_SELECT

These bits set the connection of received video data at the GVIF3 receiver 3 to downstream.

0: Not connect
1: Connect

Bit2 : DAISY_GVIF3TRX2_SELECT

These bits set the connection of received video data at the GVIF3 receiver 2 to downstream.

0: Not connect
1: Connect

Bit1 : DAISY_GVIF3TRX1_SELECT

For deserializer, these bits set the connection of received video data at the GVIF3 receiver 1 to downstream.

For serializer, these bits set the connection of received video data at the GVIF3 receiver 0 to GVIF3 transmitter 1.

0: Not connect
1: Connect

Bit0 : DAISY_GVIF3TRX0_SELECT

For deserializer, these bits set the connection of received video data at the GVIF3 receiver 0 to downstream.

For serializer, these bits set the connection of received video data at the GVIF3 receiver 0 to GVIF3 transmitter 0.

0: Not connect
1: Connect

For Desay

Register Remote Access Setup - 1 : Register remote access setup 1 (bank0,0xDF,RW)

This register controls the setting of the register remote access.

7	6	5	4	3	2	1	0
REMOTE_REGISTER_TARGET_GVIFID[7:0]							
RW-0	RW-0	RW-0	RW-0	RW-0	RW-0	RW-0	RW-0

Bit7-0 : REMOTE_REGISTER_TARGET_GVIFID

These bits set the GVIFID of the GVIF device which is remote-accessed by this GVIF3 device.

Bit3-0 are the logical value of GVIFID pin of the remote-accessed GVIF device.

Bit7-4 are determined by the kind of GVIF device.

For Desay

Register Remote Access Setup - 2 : Register remote access setup 2 (bank0,0xE0,RW)

This register controls the setting of the register remote access.

7	6	5	4	3	2	1	0
REMOTE_REGISTER_ADDRESS[7:0]							
RW-0	RW-0	RW-0	RW-0	RW-0	RW-0	RW-0	RW-0

Bit7-0 : REMOTE_REGISTER_ADDRESS

These bits set the register address which is remote-accessed by this GVIF3 device.

For Desay

Register Remote Access Setup - 3 : Register remote access setup 3 (bank0,0xE1,RW)

This register controls the setting of the register remote access.

7	6	5	4	3	2	1	0
REMOTE_REGISTER_WRITE_DATA[7:0]							
RW-0	RW-0	RW-0	RW-0	RW-0	RW-0	RW-0	RW-0

Bit7-0 : REMOTE_REGISTER_WRITE_DATA

These bits set the data which is remote-accessed and written by this GVIF3 device.

For Desay

Register Remote Access Monitor - 1 : Register remote access monitor 1 (bank0,0xE2,R)

This register indicates the status of the register remote access.

7	6	5	4	3	2	1	0
REMOTE_REGISTER_READ_DATA[7:0]							
R-0	R-0	R-0	R-0	R-0	R-0	R-0	R-0

Bit7-0 : REMOTE_REGISTER_READ_DATA

These bits indicate the data which was remote-accessed and read by this GVIF3 device.

For Desay

Register Remote Access Setup - 4 : Register remote access setup 4 (bank0,0xE3,RW)

This register controls the setting of the register remote access.

7	6	5	4	3	2	1	0
REMOTE_REGISTER_TARGET_BANK[3:0]				—	—	REMOTE_REGISTER_READ	REMOTE_REGISTER_WRITE
RW-0	RW-0	RW-0	RW-0	RW-0	RW-0	RW-0	RW-0

Bit7-4 : REMOTE_REGISTER_TARGET_BANK

These bits set the register bank number which is remote-accessed by this GVIF3 device.

Bit1 : REMOTE_REGISTER_READ

This bit sets the read process.

When this register is changed from “ 0 ” to “ 1 ”, the read process is executed.

Bit0 : REMOTE_REGISTER_WRITE

This bit sets the write process.

When this register is changed from “ 0 ” to “ 1 ”, the write process is executed.

For Desay

Register Remote Access Monitor - 2 : Register remote access monitor 2 (bank0,0xE4,R)

This register indicates the status of the register remote access.

7	6	5	4	3	2	1	0
—	—	—	—	—	—	REMOTE_REGISTER_READ_COMPLETE	REMOTE_REGISTER_WRITE_COMPLETE
R-x	R-x	R-x	R-x	R-x	R-x	R-0	R-0

Bit1 : REMOTE_REGISTER_READ_COMPLETE

This bit indicates the completion of the read process.

When the REMOTE_REGISTER_READ register or REMOTE_REGISTER_WRITE register is changed from " 0 " to " 1 ", the REMOTE_REGISTER_READ_COMPLETE register and REMOTE_REGISTER_WRITE_COMPLETE register are cleared once.

0: Not completed
1: Complete

Bit0 : REMOTE_REGISTER_WRITE_COMPLETE

This bit sets the completion of the write process.

When the REMOTE_REGISTER_READ register or REMOTE_REGISTER_WRITE register is changed from " 0 " to " 1 ", the REMOTE_REGISTER_READ_COMPLETE register and REMOTE_REGISTER_WRITE_COMPLETE register are cleared once.

0: Not completed
1: Completed

<Write Procedure>

(1) Set the Register Remote Access Setup - 5 register (0xE8).

(2) Set the Register Remote Access Setup - 1 register (0xDF).

(3) Set the REMOTE_REGISTER_TARGET_BANK register (0xE3, bit7-4).

(4) Set the Register Remote Access Setup - 2 register (0xE0).

(5) Set the Register Remote Access Setup - 3 register (0xE1).

(6) Set the REMOTE_REGISTER_WRITE register (0xE3, bit0) to " 1 ".

(7) Confirm that the REMOTE_REGISTER_WRITE_COMPLETE register (0xE4, bit0) is " 1 ".

(8) Set the REMOTE_REGISTER_WRITE register (0xE3, bit0) to " 0 ".

(9) Go back to (1) of each procedure if the write or read procedure is continued.

<Read Procedure>

(1) Set the Register Remote Access Setup - 5 register (0xE8).

(2) Set the Register Remote Access Setup - 1 register (0xDF).

(3) Set the REMOTE_REGISTER_TARGET_BANK register (0xE3, bit7-4).

(4) Set the Register Remote Access Setup - 2 register (0xE0).

For Desay

(5) Set the REMOTE_REGISTER_READ register (0xE3, bit1) to “ 1 ”.

(6) Confirm that the REMOTE_REGISTER_READ_COMPLETE register (0xE4, bit1) is “ 1 ”.

(7) Read data from the Register Remote Access Monitor - 1 register (0xE2).

(8) Set the REMOTE_REGISTER_READ register (0xE3, bit1) to “ 0 ”.

(9) Go back to (1) of each procedure if the write or read procedure is continued.

For Desay

Register Remote Access Setup - 5 : Register remote access setup 5 (bank0,0xE8,RW)

This register controls the setting of the register remote access.

7	6	5	4	3	2	1	0
—	—	REMOTE_REGISTER_GVIF3RX3_SELECT	REMOTE_REGISTER_GVIF3RX2_SELECT	REMOTE_REGISTER_GVIF3RX1_SELECT	REMOTE_REGISTER_GVIF3RX0_SELECT	—	REMOTE_REGISTER_GVIF3TX0_SELECT
RW-0	RW-0	RW-1	RW-1	RW-1	RW-1	RW-1	RW-1

Bit5 : REMOTE_REGISTER_GVIF3RX3_SELECT

These bits set the GVIF receiver 3 as the port via which is remote-accessed by this GVIF3 device.

Only one of the REMOTE_REGISTER_GVIF3RX*_SELECT registers can be set.

0: Not set
1: Set

Bit4 : REMOTE_REGISTER_GVIF3RX2_SELECT

These bits set the GVIF receiver 2 as the port via which is remote-accessed by this GVIF3 device.

Only one of the REMOTE_REGISTER_GVIF3RX*_SELECT registers can be set.

0: Not set
1: Set

Bit3 : REMOTE_REGISTER_GVIF3RX1_SELECT

These bits set the GVIF receiver 1 as the port via which is remote-accessed by this GVIF3 device.

Only one of the REMOTE_REGISTER_GVIF3RX*_SELECT registers can be set.

0: Not set
1: Set

Bit2 : REMOTE_REGISTER_GVIF3RX0_SELECT

These bits set the GVIF receiver 0 as the port via which is remote-accessed by this GVIF3 device.

Only one of the REMOTE_REGISTER_GVIF3RX*_SELECT registers can be set.

0: Not set
1: Set

Bit0 : REMOTE_REGISTER_GVIF3TX0_SELECT

These bits set the GVIF transmitter 0 as the port via which is remote-accessed by this GVIF3 device.

Only one of the REMOTE_REGISTER_GVIF3TX*_SELECT registers can be set.

0: Not set
1: Set

For Desay

GPIO Setup - 1 : GPIO setup 1 (bank0,0xEC,RW)

This register controls the setting of the GPIO data transmission.

This register must be set after the signal assignment (the Shared Pin Setup - * register) is determined.

Do not set both input and output for the same pin.

7	6	5	4	3	2	1	0
GPIO3_OUTPUT	GPIO2_OUTPUT	GPIO1_OUTPUT	GPIO0_OUTPUT	GPIO3_INPUT	GPIO2_INPUT	GPIO1_INPUT	GPIO0_INPUT
RW-0	RW-0	RW-0	RW-0	RW-0	RW-0	RW-0	RW-0

Bit7 : GPIO3_OUTPUT

This bit sets the output for GPIO3 signal.

0: Not set
1: Output

Bit6 : GPIO2_OUTPUT

This bit sets the output for GPIO2 signal.

0: Not set
1: Output

Bit5 : GPIO1_OUTPUT

This bit sets the output for GPIO1 signal.

0: Not set
1: Output

Bit4 : GPIO0_OUTPUT

This bit sets the output for GPIO0 signal.

0: Not set
1: Output

Bit3 : GPIO3_INPUT

This bit sets the input for GPIO3 signal.

0: Not set
1: Input

Bit2 : GPIO2_INPUT

This bit sets the input for GPIO2 signal.

0: Not set
1: Input

Bit1 : GPIO1_INPUT

This bit sets the input for GPIO1 signal.

0: Not set
1: Input

Bit0 : GPIO0_INPUT

This bit sets the input for GPIO0 signal.

0: Not set
1: Input

For Desay

GPIO Monitor - 1 : GPIO monitor 1 (bank0,0xED,R)

This register indicates the status of the GPIO signal.

7	6	5	4	3	2	1	0
GPIO3_INPUT_VALUE	GPIO2_INPUT_VALUE	GPIO1_INPUT_VALUE	GPIO0_INPUT_VALUE	GPIO3_OUTPUT_VALUE	GPIO2_OUTPUT_VALUE	GPIO1_OUTPUT_VALUE	GPIO0_OUTPUT_VALUE
R-0	R-0	R-0	R-0	R-0	R-0	R-0	R-0

Bit7 : GPIO3_INPUT_VALUE

These bits indicate the input value for GPIO3 signal from pins.

Bit6 : GPIO2_INPUT_VALUE

These bits indicate the input value for GPIO2 signal from pins.

Bit5 : GPIO1_INPUT_VALUE

These bits indicate the input value for GPIO1 signal from pins.

Bit4 : GPIO0_INPUT_VALUE

These bits indicate the input value for GPIO0 signal from pins.

Bit3 : GPIO3_OUTPUT_VALUE

These bits indicate the output value for GPIO3 signal to pins.

Bit2 : GPIO2_OUTPUT_VALUE

These bits indicate the output value for GPIO2 signal to pins.

Bit1 : GPIO1_OUTPUT_VALUE

These bits indicate the output value for GPIO1 signal to pins.

Bit0 : GPIO0_OUTPUT_VALUE

These bits indicate the output value for GPIO0 signal to pins.

For Desay

GPIO Setup - 4 : GPIO setup 4 (bank0,0xEE,RW)

This register controls the setting of the GPIO data transmission.

This register must be set after the signal assignment (the Shared Pin Setup - * register) is determined.

7	6	5	4	3	2	1	0
—	—	GPIO_GVIF3RX3_SELECT	GPIO_GVIF3RX2_SELECT	GPIO_GVIF3RX1_SELECT	GPIO_GVIF3RX0_SELECT	—	GPIO_GVIF3TX0_SELECT
RW-0	RW-0	RW-1	RW-1	RW-1	RW-1	RW-1	RW-1

Bit5 : GPIO_GVIF3RX3_SELECT

These bits set the GVIF receiver 3 as the port for the GPIO data transmission.

Multiple of the GPIO_GVIF3RX*_SELECT registers can be set.

0: Not set
1: Set

Bit4 : GPIO_GVIF3RX2_SELECT

These bits set the GVIF receiver 2 as the port for the GPIO data transmission.

Multiple of the GPIO_GVIF3RX*_SELECT registers can be set.

0: Not set
1: Set

Bit3 : GPIO_GVIF3RX1_SELECT

These bits set the GVIF receiver 1 as the port for the GPIO data transmission.

Multiple of the GPIO_GVIF3RX*_SELECT registers can be set.

0: Not set
1: Set

Bit2 : GPIO_GVIF3RX0_SELECT

These bits set the GVIF receiver 0 as the port for the GPIO data transmission.

Multiple of the GPIO_GVIF3RX*_SELECT registers can be set.

0: Not set
1: Set

Bit0 : GPIO_GVIF3TX0_SELECT

These bits set the GVIF transmitter 0 as the port for the GPIO data transmission.

Multiple of the GPIO_GVIF3TX*_SELECT registers can be set.

0: Not set
1: Set

For Desay

GPIO Setup - 2 : GPIO setup 2 (bank0,0xEF,RW)

This register controls the setting of the GPIO data transmission.

This register must be set after the signal assignment (the Shared Pin Setup - * register) is determined.

7	6	5	4	3	2	1	0
GPIO3_OUTPUT_OVR	GPIO2_OUTPUT_OVR	GPIO1_OUTPUT_OVR	GPIO0_OUTPUT_OVR	—	—	—	—
RW-0	RW-0	RW-0	RW-0	RW-0	RW-0	RW-0	RW-0

Bit7 : GPIO3_OUTPUT_OVR

These bits set the overridden output value for REG_GPIO3 signal to pins.

Bit6 : GPIO2_OUTPUT_OVR

These bits set the overridden output value for REG_GPIO2 signal to pins.

Bit5 : GPIO1_OUTPUT_OVR

These bits set the overridden output value for REG_GPIO1 signal to pins.

Bit4 : GPIO0_OUTPUT_OVR

These bits set the overridden output value for REG_GPIO0 signal to pins.

For Desay

GPIO Setup - 3 : GPIO setup 3 (bank0,0xF0,RW)

This register controls the setting of the GPIO data transmission.

This register must be set after the signal assignment (the Shared Pin Setup - * register) is determined.

7	6	5	4	3	2	1	0
GPIO3_OUTPUT_OVR_ENABLE	GPIO2_OUTPUT_OVR_ENABLE	GPIO1_OUTPUT_OVR_ENABLE	GPIO0_OUTPUT_OVR_ENABLE	—	—	—	—
RW-0	RW-0	RW-0	RW-0	RW-0	RW-0	RW-0	RW-0

Bit7 : GPIO3_OUTPUT_OVR_ENABLE

This bit enables or disables the override-setting of output value for GPIO3 signal.

0: Disable
1: Enable

Bit6 : GPIO2_OUTPUT_OVR_ENABLE

This bit enables or disables the override-setting of output value for GPIO2 signal.

0: Disable
1: Enable

Bit5 : GPIO1_OUTPUT_OVR_ENABLE

This bit enables or disables the override-setting of output value for GPIO1 signal.

0: Disable
1: Enable

Bit4 : GPIO0_OUTPUT_OVR_ENABLE

This bit enables or disables the override-setting of output value for GPIO0 signal.

0: Disable
1: Enable

For Desay

REG_GPIO Setup - 1 : REG_GPIO setup 1 (bank0,0xF1,RW)

This register controls the setting of the GPIO signal which is input to register or output from register.

This register must be set after the signal assignment (the Shared Pin Setup - * register) is determined. The valid registers depend on the signal assignment.

7	6	5	4	3	2	1	0
—	—	—	—	—	—	—	REG_GPIO0_INOUT
RW-0	RW-0	RW-0	RW-0	RW-0	RW-0	RW-0	RW-0

Bit0 : REG_GPIO0_INOUT

These bits set the output for REG_GPIO0 signal.

0: Input
1: Output

For Desay

REG_GPIO Setup - 2 : REG_GPIO setup 2 (bank0,0xF2,RW)

This register controls the setting of the GPIO signal which is input to register or output from register.

This register must be set after the signal assignment (the Shared Pin Setup - * register) is determined. The valid registers depend on the signal assignment.

7	6	5	4	3	2	1	0
—	—	—	—	—	—	—	REG_GPIO0_OUTPUT_VALUE
RW-0	RW-0	RW-0	RW-0	RW-0	RW-0	RW-0	RW-0

Bit0 : REG_GPIO0_OUTPUT_VALUE

These bits set the output value for REG_GPIO0 signal to pins.

For Desay

REG_GPIO Monitor - 1 : REG_GPIO monitor 1 (bank0,0xF3,R)

This register indicates the value of the GPIO signal which is input to register or output from register.

7	6	5	4	3	2	1	0
—	—	—	—	—	—	—	REG_GPIO0_INPUT_VALUE
R-x	R-x	R-x	R-x	R-x	R-x	R-x	R-0

Bit0 : REG_GPIO0_INPUT_VALUE

These bits indicate the input value for REG_GPIO0 signal from pins.

For Desay

Aux0 Setup - 1 : Aux0 setup 1 (bank0,0xF5,RW)

This register controls the setting of the Aux data transmission.

7	6	5	4	3	2	1	0
AUX_0_I2C_SPEED_MODE[1:0]		—	—	—	—	—	AUX_0_I2C_ENABLE
RW-0	RW-0	RW-0	RW-0	RW-0	RW-0	RW-0	RW-0

Bit7-6 : AUX_0_I2C_SPEED_MODE

These bits set the data rate of the Aux data transmission (I2C). (Port 0)

00: Standard-mode (Max. 100 kbps)
01: Fast-mode (Max. 400 kbps)
10: Fast-mode Plus (Max. 1 Mbps)
11: Reserved

Bit0 : AUX_0_I2C_ENABLE

This bit enables or disables the Aux data transmission (I2C). (Port 0)

This bit must be set to " 1 " after setting other registers of the Aux0 Setup - * registers, and it must be set to " 0 " before changing other registers of the Aux0 Setup - * registers.

0: Disable
1: Enable

For Desay

Aux0 Setup - 6 : Aux0 setup 6 (bank0,0xF6,RW)

This register controls the setting of the Aux data transmission.

7	6	5	4	3	2	1	0
—	—	AUX_0_I2C_PSEUDO_SLAVE_DISABLE	AUX_0_I2C_PSEUDO_MASTER_DISABLE	—	—	—	—
RW-0	RW-0	RW-0	RW-0	RW-0	RW-0	RW-0	RW-1

Bit5 : AUX_0_I2C_PSEUDO_SLAVE_DISABLE

This bit disables or enables the pseudo slave of the Aux data transmission (I2C). (Port 0)

0: Enable
1: Disable

Bit4 : AUX_0_I2C_PSEUDO_MASTER_DISABLE

This bit disables or enables the pseudo master of the Aux data transmission (I2C). (Port 0)

0: Enable
1: Disable

For Desay

Aux0 Setup - 2 : Aux0 setup 2 (bank0,0xF7,RW)

This register controls the setting of the Aux data transmission.

7	6	5	4	3	2	1	0
AUX_0_I2C_TIMEOUT[7:0]							
RW-1	RW-1	RW-1	RW-1	RW-1	RW-1	RW-1	RW-1

Bit7-0 : AUX_0_I2C_TIMEOUT

These bits set the timeout time of the Aux data transmission (I2C). (Port 0)

The value equal to or greater than 1 should be set.

The timeout time is AUX_I2C_TIMEOUT × (0.82 ms +/- 10 %).

For Desay

Aux0 Setup - 3 : Aux0 setup 3 (bank0,0xFA,RW)

This register controls the setting of the Aux data transmission.

7	6	5	4	3	2	1	0
AUX_0_I2C_ADDRESS_FLIP[6:0]							—
RW-0	RW-0	RW-0	RW-0	RW-0	RW-0	RW-0	RW-0

Bit7-1 : AUX_0_I2C_ADDRESS_FLIP

These bits set the bit invert for the received slave address in the pseudo master of the Aux data transmission (I2C). (Port 0)

This is used for preventing the slave addresses from overlapping.

For Desay

Aux0 Setup - 5 : Aux0 setup 5 (bank0,0xFE,RW)

This register controls the setting of the Aux data transmission.

7	6	5	4	3	2	1	0
—	—	AUX_0_GVIF3RX3_SELECT	AUX_0_GVIF3RX2_SELECT	AUX_0_GVIF3RX1_SELECT	AUX_0_GVIF3RX0_SELECT	—	AUX_0_GVIF3TX0_SELECT
RW-0	RW-0	RW-0	RW-0	RW-0	RW-0	RW-0	RW-0

Bit5 : AUX_0_GVIF3RX3_SELECT

These bits set the GVIF receiver 3 as the port for the Aux data transmission. (Port 0)

Only one of the AUX_0_GVIF3RX*_SELECT registers can be set.

0: Not set
1: Set

Bit4 : AUX_0_GVIF3RX2_SELECT

These bits set the GVIF receiver 2 as the port for the Aux data transmission. (Port 0)

Only one of the AUX_0_GVIF3RX*_SELECT registers can be set.

0: Not set
1: Set

Bit3 : AUX_0_GVIF3RX1_SELECT

These bits set the GVIF receiver 1 as the port for the Aux data transmission. (Port 0)

Only one of the AUX_0_GVIF3RX*_SELECT registers can be set.

0: Not set
1: Set

Bit2 : AUX_0_GVIF3RX0_SELECT

These bits set the GVIF receiver 0 as the port for the Aux data transmission. (Port 0)

Only one of the AUX_0_GVIF3RX*_SELECT registers can be set.

0: Not set
1: Set

Bit0 : AUX_0_GVIF3TX0_SELECT

These bits set the GVIF transmitter 0 as the port for the Aux data transmission. (Port 0)

Only one of the AUX_0_GVIF3TX*_SELECT registers can be set.

0: Not set
1: Set

For Desay

Failure Diagnosis Monitor - 2 : Failure Diagnosis Monitor 2 (bank1,0x1E,R)

This register indicates the status of the failure diagnosis.

7	6	5	4	3	2	1	0
—	—	—	—	GVIF3TX0_NEG_PIN_L_ERROR	GVIF3TX0_NEG_PIN_H_ERROR	GVIF3TX0_POS_PIN_L_ERROR	GVIF3TX0_POS_PIN_H_ERROR
R-x	R-x	R-x	R-x	R-0	R-0	R-0	R-0

Bit3 : GVIF3TX0_NEG_PIN_L_ERROR

This bit indicates the negative pin status of the GVIF3 transmitter 0.

0: Normal
1: Fail (Low Voltage)

Bit2 : GVIF3TX0_NEG_PIN_H_ERROR

This bit indicates the negative pin status of the GVIF3 transmitter 0.

0: Normal
1: Fail (High Voltage)

Bit1 : GVIF3TX0_POS_PIN_L_ERROR

This bit indicates the positive pin status of the GVIF3 transmitter 0.

0: Normal
1: Fail (Low Voltage)

Bit0 : GVIF3TX0_POS_PIN_H_ERROR

This bit indicates the positive pin status of the GVIF3 transmitter 0.

0: Normal
1: Fail (High Voltage)

For Desay

SYNC Setup - 2 : SYNC setup 2 (bank1,0x2F,RW)

This register controls the setting of the sync signal transmission from a deserializer to a serializer.

This register must be set after the signal assignment (the Shared Pin Setup - * register) is determined.

7	6	5	4	3	2	1	0
—	—	—	—	—	—	—	SYNC_ENABLE
RW-0	RW-0	RW-0	RW-0	RW-0	RW-0	RW-0	RW-0

Bit0 : SYNC_ENABLE

This bit enables or disables the sync signal transmission.

This bit must be set after the signal assignment (the Shared Pin Setup - * register) is set.

This bit must be set to " 1 " after setting other registers of the SYNC Setup - * registers, and it must be set to " 0 " before changing other registers of the SYNC Setup - * registers.

0: Disable
1: Enable

For Desay

SYNC Setup - 3 : SYNC setup 3 (bank1,0x30,RW)

This register controls the setting of the sync signal transmission from a deserializer to a serializer.

This register must be set after the signal assignment (the Shared Pin Setup - * register) is determined.

7	6	5	4	3	2	1	0
—	—	—	—	—	—	FRAME_SYNC_SELECT	MASTER_CLK_SELECT
RW-0	RW-0	RW-0	RW-0	RW-0	RW-0	RW-0	RW-0

Bit1 : FRAME_SYNC_SELECT

This bit sets the assignment of FRAME_SYNC signal for shared pins.

0: Not assign
1: Assign

Bit0 : MASTER_CLK_SELECT

This bit sets the assignment of MASTER_CLK signal for shared pins.

When MASTER_CLK signal is assigned to shared pin in deserializer, MASTER_CLK signal should be input.

0: Not assign
1: Assign

For Desay

SYNC Setup - 5 : SYNC setup 5 (bank1,0x36,RW)

This register controls the setting of the sync signal transmission from a deserializer to a serializer.

7	6	5	4	3	2	1	0
MASTER_CLK_DIVISION_RATIO[7:0]							
RW-0	RW-0	RW-0	RW-0	RW-0	RW-0	RW-0	RW-0

Bit7-0 : MASTER_CLK_DIVISION_RATIO

These bits set the frequency division ratio of MASTER_CLK which is generated in the serializer to MASTER_CLK which is input to the deserializer.

0000 0000: No division
0000 0001: 1/2
0000 0011: 1/4

For Desay

MIPI Transmitter 0_0 Setup - 1 : MIPI transmitter 0_0 setup 1 (bank1,0x4D,RW)

This register controls the setting of the MIPI transmitter.

7	6	5	4	3	2	1	0
—	—	MIPI_TX0_DATA_MODE[1:0]		MIPI_TX0_0_LANE_NUMBER[3:0]			
RW-0	RW-0	RW-0	RW-1	RW-0	RW-1	RW-0	RW-0

Bit5-4 : MIPI_TX0_DATA_MODE

This bit sets the assignment of the data lane of MIPI output (Port 0). Please refer to the description of functions and operation.

00: Data Mode 0
01: Data Mode 1
10: Reserved
11: Reserved

Bit3-0 : MIPI_TX0_0_LANE_NUMBER

These bits set the number of the used lanes of MIPI output (Port 0, Sub port 0).

The lanes are assigned from Channel 0 for the number of the used lanes.

0000 : Reserved
0001 : 1Lane
0010 : 2Lane
0011 : Reserved
0100 : 4Lane
0101-1111 : Reserved

For Desay

MIPI Transmitter 0_0 Setup - 2 : MIPI transmitter 0_0 setup 2 (bank1,0x4E,RW)

This register controls the setting of the MIPI transmitter.

7	6	5	4	3	2	1	0
MIPI_TX0_0_TLPX_DATA[7:0]							
RW-0	RW-0	RW-1	RW-0	RW-0	RW-0	RW-0	RW-0

Bit7-0 : MIPI_TX0_0_TLPX_DATA

These bits set the TLPX_DATA parameter of MIPI output (Port 0, Sub port 0).

For Desay

MIPI Transmitter 0_0 Setup - 3 : MIPI transmitter 0_0 setup 3 (bank1,0x4F,RW)

This register controls the setting of the MIPI transmitter.

7	6	5	4	3	2	1	0
MIPI_TX0_0_THS_PREPARE[7:0]							
RW-0	RW-0	RW-1	RW-0	RW-0	RW-0	RW-0	RW-0

Bit7-0 : MIPI_TX0_0_THS_PREPARE

These bits set the LSB 8 bits ([7:0]) of the THS_PREPARE parameter of MIPI output (Port 0, Sub port 0).

For Desay

MIPI Transmitter 0_0 Setup - 4 : MIPI transmitter 0_0 setup 4 (bank1,0x50,RW)

This register controls the setting of the MIPI transmitter.

7	6	5	4	3	2	1	0
—	—	—	—	MIPI_TX0_0_THS_TRAIL[9:8]		MIPI_TX0_0_THS_PREPARE[9:8]	
RW-0	RW-0	RW-0	RW-0	RW-0	RW-0	RW-0	RW-0

Bit3-2 : MIPI_TX0_0_THS_TRAIL

These bits set the MSB 2 bits ([9:8]) of the THS_TRAIL parameter of MIPI output (Port 0, Sub port 0).

Bit1-0 : MIPI_TX0_0_THS_PREPARE

These bits set the MSB 2 bits ([9:8]) of the THS_PREPARE parameter of MIPI output (Port 0, Sub port 0).

For Desay

MIPI Transmitter 0_0 Setup - 5 : MIPI transmitter 0_0 setup 5 (bank1,0x51,RW)

This register controls the setting of the MIPI transmitter.

7	6	5	4	3	2	1	0
MIPI_TX0_0_THS_ZERO[7:0]							
RW-0	RW-0	RW-1	RW-0	RW-0	RW-0	RW-0	RW-0

Bit7-0 : MIPI_TX0_0_THS_ZERO

These bits set the THS_ZERO parameter of MIPI output (Port 0, Sub port 0).

For Desay

MIPI Transmitter 0_0 Setup - 6 : MIPI transmitter 0_0 setup 6 (bank1,0x52,RW)

This register controls the setting of the MIPI transmitter.

7	6	5	4	3	2	1	0
MIPI_TX0_0_THS_TRAIL[7:0]							
RW-0	RW-0	RW-1	RW-0	RW-0	RW-0	RW-0	RW-0

Bit7-0 : MIPI_TX0_0_THS_TRAIL

These bits set the LSB 8 bits ([7:0]) of the THS_TRAIL parameter of MIPI output (Port 0, Sub port 0).

For Desay

MIPI Transmitter 0_0 Setup - 7 : MIPI transmitter 0_0 setup 7 (bank1,0x53,RW)

This register controls the setting of the MIPI transmitter.

7	6	5	4	3	2	1	0
MIPI_TX0_0_TLPX_CLK[7:0]							
RW-0	RW-0	RW-1	RW-0	RW-0	RW-0	RW-0	RW-0

Bit7-0 : MIPI_TX0_0_TLPX_CLK

These bits set the TLPX_CLK parameter of MIPI output (Port 0, Sub port 0).

For Desay

MIPI Transmitter 0_0 Setup - 8 : MIPI transmitter 0_0 setup 8 (bank1,0x54,RW)

This register controls the setting of the MIPI transmitter.

7	6	5	4	3	2	1	0
MIPI_TX0_0_TCLK_PREPARE1[7:0]							
RW-0	RW-0	RW-1	RW-0	RW-0	RW-0	RW-0	RW-0

Bit7-0 : MIPI_TX0_0_TCLK_PREPARE1

These bits set the LSB 8 bits ([7:0]) of the TCLK_PREPARE1 parameter of MIPI output (Port 0, Sub port 0).

For Desay

MIPI Transmitter 0_0 Setup - 9 : MIPI transmitter 0_0 setup 9 (bank1,0x55,RW)

This register controls the setting of the MIPI transmitter.

7	6	5	4	3	2	1	0
—	—	—	—	MIPI_TX0_0_TCLK_TRAIL[9:8]		MIPI_TX0_0_TCLK_PREPARE1[9:8]	
RW-0	RW-0	RW-0	RW-0	RW-0	RW-0	RW-0	RW-0

Bit3-2 : MIPI_TX0_0_TCLK_TRAIL

These bits set the MSB 2 bits ([9:8]) of the TCLK_TRAIL parameter of MIPI output (Port 0, Sub port 0).

Bit1-0 : MIPI_TX0_0_TCLK_PREPARE1

These bits set the MSB 2 bits ([9:8]) of the TCLK_PREPARE1 parameter of MIPI output (Port 0, Sub port 0).

For Desay

MIPI Transmitter 0_0 Setup - 10 : MIPI transmitter 0_0 setup 10 (bank1,0x56,RW)

This register controls the setting of the MIPI transmitter.

7	6	5	4	3	2	1	0
MIPI_TX0_0_THS_EXIT[7:0]							
RW-0	RW-0	RW-1	RW-0	RW-0	RW-0	RW-0	RW-0

Bit7-0 : MIPI_TX0_0_THS_EXIT

These bits set the THS_EXIT parameter of MIPI output (Port 0, Sub port 0).

For Desay

MIPI Transmitter 0_0 Setup - 11 : MIPI transmitter 0_0 setup 11 (bank1,0x57,RW)

This register controls the setting of the MIPI transmitter.

7	6	5	4	3	2	1	0
MIPI_TX0_0_TCLK_TRAIL[7:0]							
RW-0	RW-0	RW-1	RW-0	RW-0	RW-0	RW-0	RW-0

Bit7-0 : MIPI_TX0_0_TCLK_TRAIL

These bits set the LSB 8 bits ([7:0]) of the TCLK_TRAIL parameter of MIPI output (Port 0, Sub port 0).

For Desay

MIPI Transmitter 0_0 Setup - 12 : MIPI transmitter 0_0 setup 12 (bank1,0x58,RW)

This register controls the setting of the MIPI transmitter.

7	6	5	4	3	2	1	0
—	—	—	MIPI_TX0_0_SELECT	—	MIPI_TX0_CLK_MODE[2:0]		
RW-0	RW-0	RW-0	RW-1	RW-1	RW-0	RW-1	RW-0

Bit4 : MIPI_TX0_0_SELECT

This bit sets the assignment of MIPI signal for pins. (Sub port 0)

0: Not assign
1: Assign

Bit2-0 : MIPI_TX0_CLK_MODE

These bits set the assignment of the clock lane of MIPI output (Port 0). Please refer to the description of functions and operation.

000: Reserved
001: Clock Mode 1
010: Clock Mode 2
011-111 : Reserved

For Desay

MIPI Transmitter 0_0 Setup - 14 : MIPI transmitter 0_0 setup 14 (bank1,0x5A,RW)

This register controls the setting of the MIPI transmitter.

7	6	5	4	3	2	1	0
MIPI_TX0_0_TCLK_PREPARE2[7:0]							
RW-0	RW-0	RW-1	RW-0	RW-0	RW-0	RW-0	RW-0

Bit7-0 : MIPI_TX0_0_TCLK_PREPARE2

These bits set the TCLK_PREPARE2 parameter of MIPI output (Port 0, Sub port 0).

For Desay

MIPI Transmitter 0_0 Setup - 16 : MIPI transmitter 0_0 setup 16 (bank1,0x5D,RW)

This register controls the setting of the MIPI transmitter.

7	6	5	4	3	2	1	0
MIPI_TX0_0_UNLOADER_SELECT[7:0]							
RW-0	RW-0	RW-0	RW-0	RW-1	RW-1	RW-1	RW-1

Bit7-0 : MIPI_TX0_0_UNLOADER_SELECT

These bits set the module number of Unloader which is connected to sub port 0 of the video data output.

Each of the Unloaders can be connected to only one of sub ports.

The bit number indicates the module number of Unloader. The corresponding bits should be set to " 1 " to select the Unloaders.

Bit0: Unloader 0

Bit1: Unloader 1

Bit2: Unloader 2

Bit3: Unloader 3

Bit4: Unloader 4 (CXD4964ER-W and CXD4984ER-W only)

Bit5: Unloader 5 (CXD4964ER-W and CXD4984ER-W only)

Bit6: Unloader 6 (CXD4964ER-W and CXD4984ER-W only)

Bit7: Unloader 7 (CXD4964ER-W and CXD4984ER-W only)

For Desay

PLL0 Setup - 6 : PLL0 setup 6 (bank1,0x5F,RW)

This register controls the setting of PLL.

7	6	5	4	3	2	1	0
MIPI_TX0_CLK_FIXED_MODE_PLL_VALUE2[15:8]							
RW-0	RW-0	RW-0	RW-0	RW-0	RW-0	RW-0	RW-0

Bit7-0 : MIPI_TX0_CLK_FIXED_MODE_PLL_VALUE2

These bits set the MSB 8 bits ([15:8]) of the PLL parameter of MIPI output (Port 0) with the clock fixed mode.

The value of the following equation should be set.

MIPI_TX0_CLK_FIXED_MODE_PLL_VALUE2[15] = 0

MIPI_TX0_CLK_FIXED_MODE_PLL_VALUE2[14:0] = fractional part of (DR × D / (System clock frequency)) × 2 ^ 15

DR: MIPI D-PHY data rate (Mbps / Lane)

The system clock frequency is determined by the following.

External system clock input mode: the frequency of external system clock

Internal system clock mode: 20 (MHz)

The value of D is determined by the value of the MIPI_TX0_CLK_FIXED_MODE_FREQ_RANGE register.

0001-0011 : D=1
0100-0110 : D=2
0111-1001 : D=4
1010-1100 : D=8
1101-1111 : D=16

For Desay

PLL0 Setup - 7 : PLL0 setup 7 (bank1,0x60,RW)

This register controls the setting of PLL.

7	6	5	4	3	2	1	0
MIPI_TX0_CLK_FIXED_MODE_PLL_VALUE2[7:0]							
RW-0	RW-0	RW-0	RW-0	RW-0	RW-0	RW-0	RW-0

Bit7-0 : MIPI_TX0_CLK_FIXED_MODE_PLL_VALUE2

These bits set the LSB 8 bits ([7:0]) of the PLL parameter of MIPI output (Port 0) with the clock fixed mode.

The value of the following equation should be set.

MIPI_TX0_CLK_FIXED_MODE_PLL_VALUE2[15] = 0

MIPI_TX0_CLK_FIXED_MODE_PLL_VALUE2[14:0] = fractional part of (DR × D / (System clock frequency)) × 2 ^ 15

DR: MIPI D-PHY data rate (Mbps / Lane)

The system clock frequency is determined by the following.

External system clock input mode: the frequency of external system clock

Internal system clock mode: 20 (MHz)

The value of D is determined by the value of the MIPI_TX0_CLK_FIXED_MODE_FREQ_RANGE register.

0001-0011 : D=1
0100-0110 : D=2
0111-1001 : D=4
1010-1100 : D=8
1101-1111 : D=16

For Desay

PLL0 Setup - 1 : PLL0 setup 1 (bank1,0x61,RW)

This register controls the setting of PLL.

7	6	5	4	3	2	1	0
MIPI_TX0_CLK_FIXED_MODE_ENABLE_0	—	—	—	—	MIPI_TX0_CLK_FIXED_MODE_PLL_VALUE[10:8]		
RW-0	RW-0	RW-0	RW-0	RW-0	RW-0	RW-0	RW-0

Bit7 : MIPI_TX0_CLK_FIXED_MODE_ENABLE_0

This bit enables or disables the setting of the clock fixed mode of MIPI output (Port 0).

When the clock regeneration mode is set by the MIPI_TX0_CLK_FIXED_MODE register, this bit should be set to " 0 ".

0: Disable
1: Enable

Bit2-0 : MIPI_TX0_CLK_FIXED_MODE_PLL_VALUE

These bits set the MSB 3 bits ([10:8]) of the PLL parameter of MIPI output (Port 0) with the clock fixed mode.

The value of the following equation should be set. (Round down to the nearest integer.)

MIPI_TX0_CLK_FIXED_MODE_PLL_VALUE = Integer part of (DR × D / (System clock frequency))

DR: MIPI D-PHY data rate (Mbps / Lane)

The system clock frequency is determined by the following.

External system clock input mode: the frequency of external system clock

Internal system clock mode: 20 (MHz)

The value of D is determined by the value of the MIPI_TX0_CLK_FIXED_MODE_FREQ_RANGE register.

0001-0011 : D=1
0100-0110 : D=2
0111-1001 : D=4
1010-1100 : D=8
1101-1111 : D=16

When the internal system clock is used, the actual MIPI D-PHY data rate is the value of the following equation.

maximum : DR × (21 / 20) × ((100 + maximum spread rate of SSCG(%)) / 100)

minimum : DR × ((100 - maximum spread rate of SSCG(%)) / 100)

When the external system clock is used, the actual MIPI D-PHY data rate is the value of the following equation.

For Desay

maximum : DR ×((100 + maximum spread rate of SSCG(%)) / 100)

minimum : DR × ((100 - maximum spread rate of SSCG(%)) / 100)

For Desay

PLL0 Setup - 2 : PLL0 setup 2 (bank1,0x62,RW)

This register controls the setting of PLL.

7	6	5	4	3	2	1	0
MIPI_TX0_CLK_FIXED_MODE_PLL_VALUE[7:0]							
RW-0	RW-0	RW-0	RW-0	RW-0	RW-0	RW-0	RW-0

Bit7-0 : MIPI_TX0_CLK_FIXED_MODE_PLL_VALUE

These bits set the LSB 8 bits ([7:0]) of the PLL parameter of MIPI output (Port 0) with the clock fixed mode.

The value of the following equation should be set. (Round down to the nearest integer.)

MIPI_TX0_CLK_FIXED_MODE_PLL_VALUE = Integer part of (DR × D / (System clock frequency))

DR: MIPI D-PHY data rate (Mbps / Lane)

The system clock frequency is determined by the following.

External system clock input mode: the frequency of external system clock

Internal system clock mode: 20 (MHz)

The value of D is determined by the value of the MIPI_TX0_CLK_FIXED_MODE_FREQ_RANGE register.

0001-0011 : D=1
0100-0110 : D=2
0111-1001 : D=4
1010-1100 : D=8
1101-1111 : D=16

When the internal system clock is used, the actual MIPI D-PHY data rate is the value of the following equation.

maximum : DR × (21 / 20) × ((100 + maximum spread rate of SSCG(%)) / 100)

minimum : DR × ((100 - maximum spread rate of SSCG(%)) / 100)

When the external system clock is used, the actual MIPI D-PHY data rate is the value of the following equation.

maximum : DR ×((100 + maximum spread rate of SSCG(%)) / 100)

minimum : DR × ((100 - maximum spread rate of SSCG(%)) / 100)

For Desay

PLL0 Setup - 5 : PLL0 setup 5 (bank1,0x63,RW)

This register controls the setting of PLL.

7	6	5	4	3	2	1	0
—	—	—	—	—	—	—	MIPI_TX0_CLK_FIXED_MODE_ENABLE_2
RW-0	RW-0	RW-0	RW-0	RW-0	RW-0	RW-0	RW-0

Bit0 : MIPI_TX0_CLK_FIXED_MODE_ENABLE_2

This bit enables or disables the setting of the clock fixed mode of MIPI output (Port 0).

When the clock regeneration mode is set by the MIPI_TX0_CLK_FIXED_MODE register, this bit should be set to " 0 ".

0: Disable
1: Enable

For Desay

PLL0 Setup - 3 : PLL0 setup 3 (bank1,0x65,RW)

This register controls the setting of PLL.

7	6	5	4	3	2	1	0
—	—	MIPI_TX0_CLK_FIXED_MODE_ENABLE_1	—	—	—	—	—
RW-0	RW-0	RW-0	RW-0	RW-0	RW-0	RW-0	RW-0

Bit5 : MIPI_TX0_CLK_FIXED_MODE_ENABLE_1

This bit enables or disables the setting of the clock fixed mode of MIPI output (Port 0).

When the clock regeneration mode is set by the MIPI_TX0_CLK_FIXED_MODE register, this bit should be set to " 0 ".

0: Disable
1: Enable

For Desay

PLL0 Setup - 4 : PLL0 setup 4 (bank1,0x66,RW)

This register controls the setting of PLL.

7	6	5	4	3	2	1	0
—	—	—	—	MIPI_TX0_CLK_FIXED_MODE_FREQ_RANGE[3:0]			
RW-0	RW-0	RW-0	RW-0	RW-0	RW-0	RW-0	RW-0

Bit3-0 : MIPI_TX0_CLK_FIXED_MODE_FREQ_RANGE

These bits set the frequency range of MIPI output (Port 0) with the clock fixed mode.

DR: MIPI D-PHY data rate (Mbps / Lane)

0000: Reserved
0001: 3600 Mbps < DR ≤ 4500 Mbps
0010: 2850 Mbps < DR ≤ 3600 Mbps
0011: 2275 Mbps < DR ≤ 2850 Mbps
0100: 1800 Mbps < DR ≤ 2275 Mbps
0101: 1425 Mbps < DR ≤ 1800 Mbps
0110: 1137.5 Mbps < DR ≤ 1425 Mbps
0111: 900 Mbps < DR ≤ 1137.5 Mbps
1000: 712.5 Mbps < DR ≤ 900 Mbps
1001: 568.75 Mbps < DR ≤ 712.5 Mbps
1010: 450 Mbps < DR ≤ 568.75 Mbps
1011: 356.25 Mbps < DR ≤ 450 Mbps
1100: 284.375 Mbps < DR ≤ 356.25 Mbps
1101: 225 Mbps < DR ≤ 284.375 Mbps
1110: 178.125 Mbps < DR ≤ 225 Mbps
1111: DR ≤ 178.125 Mbps

For Desay

SSCG0 Setup - 1 : SSCG0 setup 1 (bank1,0x68,RW)

This register controls the setting of SSCG.

The VIDEO_OUTPUT_ENABLE_* register must be set to “ 0 ” before the values of this register are changed, and then the VIDEO_OUTPUT_ENABLE_* register must be set to “ 1 ” after they are changed.

7	6	5	4	3	2	1	0
—	—	—	—	—	—	—	SSCG_0_ENABLE
RW-0	RW-0	RW-1	RW-0	RW-0	RW-0	RW-0	RW-0

Bit0 : SSCG_0_ENABLE

This bit enables or disables SSCG.

0: Disable
1: Enable

For Desay

SSCG0 Setup - 2 : SSCG0 setup 2 (bank1,0x69,RW)

This register controls the setting of SSCG.

The VIDEO_OUTPUT_ENABLE_* register must be set to “ 0 ” before the values of this register are changed, and then the VIDEO_OUTPUT_ENABLE_* register must be set to “ 1 ” after they are changed.

7	6	5	4	3	2	1	0
—	—	—	—	—	SSCG_0_SPREAD_RATE[8:8]	SSCG_0_MODULATION_FREQ[9:8]	
RW-0	RW-0	RW-0	RW-0	RW-0	RW-0	RW-0	RW-0

Bit2 : SSCG_0_SPREAD_RATE

These bits set the MSB 1 bits ([8:8]) of the spread rate of SSCG.

0 0001 1110: maximum spread rate of SSCG +/- 0.25 % (Center Spread)
0 0101 0000: maximum spread rate of SSCG +/- 0.5 % (Center Spread)
0 1010 0000: maximum spread rate of SSCG +/- 1.0 % (Center Spread)
0 1111 0000: maximum spread rate of SSCG +/- 1.5 % (Center Spread)
1 0100 0000: maximum spread rate of SSCG +/- 2.0 % (Center Spread)

Others: Reserved

Bit1-0 : SSCG_0_MODULATION_FREQ

These bits set the MSB 2 bits ([9:8]) of the modulation frequency of SSCG.

When it is DR ≤ 2500 Mbps in the GVIF3 deserializer which has MIPI D-PHY CSI-2 interface or when the GVIF3 deserializer which has other video interface except MIPI D-PHY CSI-2 interface:

11 1110 1000: 10 kHz
10 1001 1011: 15 kHz

Others : Reserved

When it is DR > 2500 Mbps in the GVIF3 deserializer which has MIPI D-PHY CSI-2 interface:

01 0011 0110: 30 to 33 kHz (using external system clock input mode (19 MHz ≤ frequency < 20 MHz))
01 0100 0110: 30 to 33 kHz (using external system clock input mode (20 MHz ≤ frequency ≤ 21 MHz) or using internal system clock mode)

Others : Reserved

For Desay

SSCG0 Setup - 3 : SSCG0 setup 3 (bank1,0x6A,RW)

This register controls the setting of SSCG.

The VIDEO_OUTPUT_ENABLE_* register must be set to “ 0 ” before the values of this register are changed, and then the VIDEO_OUTPUT_ENABLE_* register must be set to “ 1 ” after they are changed.

7	6	5	4	3	2	1	0
SSCG_0_MODULATION_FREQ[7:0]							
RW-0	RW-0	RW-0	RW-0	RW-0	RW-0	RW-0	RW-0

Bit7-0 : SSCG_0_MODULATION_FREQ

These bits set the LSB 8 bits ([7:0]) of the modulation frequency of SSCG.

When it is DR ≤ 2500 Mbps in the GVIF3 deserializer which has MIPI D-PHY CSI-2 interface or when the GVIF3 deserializer which has other video interface except MIPI D-PHY CSI-2 interface:

11 1110 1000: 10 kHz
10 1001 1011: 15 kHz

Others : Reserved

When it is DR > 2500 Mbps in the GVIF3 deserializer which has MIPI D-PHY CSI-2 interface:

01 0011 0110: 30 to 33 kHz (using external system clock input mode (19 MHz ≤ frequency < 20 MHz))
01 0100 0110: 30 to 33 kHz (using external system clock input mode (20 MHz ≤ frequency ≤ 21 MHz) or using internal system clock mode)

Others : Reserved

For Desay

SSCG0 Setup - 4 : SSCG0 setup 4 (bank1,0x6B,RW)

This register controls the setting of SSCG.

The VIDEO_OUTPUT_ENABLE_* register must be set to “ 0 ” before the values of this register are changed, and then the VIDEO_OUTPUT_ENABLE_* register must be set to “ 1 ” after they are changed.

7	6	5	4	3	2	1	0
SSCG_0_SPREAD_RATE[7:0]							
RW-0	RW-0	RW-0	RW-0	RW-0	RW-0	RW-0	RW-0

Bit7-0 : SSCG_0_SPREAD_RATE

These bits set the LSB 8 bits ([7:0]) of the spread rate of SSCG.

0 0001 1110: maximum spread rate of SSCG +/- 0.25 % (Center Spread)
0 0101 0000: maximum spread rate of SSCG +/- 0.5 % (Center Spread)
0 1010 0000: maximum spread rate of SSCG +/- 1.0 % (Center Spread)
0 1111 0000: maximum spread rate of SSCG +/- 1.5 % (Center Spread)
1 0100 0000: maximum spread rate of SSCG +/- 2.0 % (Center Spread)

Others: Reserved

For Desay

Daisy Chain Setup - 2 : Daisy chain setup 2 (bank1,0x79,RW)

This register controls the setting of the daisy chain connection.

7	6	5	4	3	2	1	0
—	—	—	—	—	—	—	SYSTEM CLK_INPUT_ENABLE
RW-0	RW-0	RW-1	RW-1	RW-1	RW-0	RW-0	RW-0

Bit0 : SYSTEMCLK_INPUT_ENABLE

This bit enables or disables the external system clock input mode. The external system clock input mode is needed for the daisy chain connection.

0: Disable
1: Enable

For Desay

GVIF3 Receiver 0 Setup - 3 : GVIF3 receiver 0 setup 3 (bank1,0x81,RW)

This register controls the setting of GVIF3 receiver.

7	6	5	4	3	2	1	0
—	—	—	—	—	—	—	GVIF3RX0_COAX_MODE
RW-0	RW-1	RW-0	RW-0	RW-0	RW-0	RW-0	RW-0

Bit0 : GVIF3RX0_COAX_MODE

These bits set the serial cable type which is used for the GVIF3 receiver 0.

When a coaxial cable is used, these bits must be set prior to setting other registers.

0: STP cable
1: COAX cable

For Desay

GVIF3 receiver 0 Setup - 9 : GVIF3 receiver 0 setup 9 (bank1,0x86,RW)

This register controls the setting of GVIF3 receiver.

7	6	5	4	3	2	1	0
GVIF3RX0_EQ_MODE[7:0]							
RW-1	RW-1	RW-1	RW-1	RW-1	RW-0	RW-1	RW-1

Bit7-0 : GVIF3RX0_EQ_MODE

These bits set EQ parameter according to the serial cable type and data rate which is used for the GVIF3 receiver 0.

After these bits are changed, the GVIF3RX0_ENABLE register must be set to " 0 " and then it must be set to " 1 ".

0100 0000: STP cable, Intra/Inter-board differential connection, the GVIF3RX0_SPEED register setting 8.4 to 12.0 Gbps (Low Gain Mode. This setting lowers the maximum limit of equalizer gain.)
1010 1111: COAX cable, the GVIF3RX0_SPEED register setting 2.4 to 3.6 Gbps
1010 1101: COAX cable, the GVIF3RX0_SPEED register setting 4.8 to 7.2 Gbps
1101 1101: STP cable, the GVIF3RX0_SPEED register setting 8.4 to 9.6 Gbps
1111 1011: STP cable, Intra/Inter-board differential connection, the GVIF3RX0_SPEED register setting 2.4 to 7.2 Gbps (Default)

For Desay

GVIF3 receiver 0 Setup - 8 : GVIF3 receiver 0 setup 8 (bank2,0x00,RW)

This register controls the setting of GVIF3 receiver.

7	6	5	4	3	2	1	0
GVIF3RX0_DROP_SOURCE_DATA_GVIFID_1[7:0]							
RW-1	RW-1	RW-1	RW-1	RW-1	RW-1	RW-1	RW-1

Bit7-0 : GVIF3RX0_DROP_SOURCE_DATA_GVIFID_1

These bits set the GVIFID (video stream GVIFID) of received video data at the GVIF3 receiver 0 to be deleted from GVIF3 transmitter output to the downstream GVIF3 device.

Deleted video data is not transmitted to the downstream GVIF devices in the daisy chain.

For Desay

GVIF3 receiver 1 Setup - 8 : GVIF3 receiver 1 setup 8 (bank2,0x01,RW)

This register controls the setting of GVIF3 receiver.

7	6	5	4	3	2	1	0
GVIF3RX1_DROP_SOURCE_DATA_GVIFID_1[7:0]							
RW-1	RW-1	RW-1	RW-1	RW-1	RW-1	RW-1	RW-1

Bit7-0 : GVIF3RX1_DROP_SOURCE_DATA_GVIFID_1

These bits set the GVIFID (video stream GVIFID) of received video data at the GVIF3 receiver 1 to be deleted from GVIF3 transmitter output to the downstream GVIF3 device.

Deleted video data is not transmitted to the downstream GVIF devices in the daisy chain.

For Desay

GVIF3 receiver 2 Setup - 8 : GVIF3 receiver 2 setup 8 (bank2,0x02,RW)

This register controls the setting of GVIF3 receiver.

7	6	5	4	3	2	1	0
GVIF3RX2_DROP_SOURCE_DATA_GVIFID_1[7:0]							
RW-1	RW-1	RW-1	RW-1	RW-1	RW-1	RW-1	RW-1

Bit7-0 : GVIF3RX2_DROP_SOURCE_DATA_GVIFID_1

These bits set the GVIFID (video stream GVIFID) of received video data at the GVIF3 receiver 2 to be deleted from GVIF3 transmitter output to the downstream GVIF3 device.

Deleted video data is not transmitted to the downstream GVIF devices in the daisy chain.

For Desay

GVIF3 receiver 3 Setup - 8 : GVIF3 receiver 3 setup 8 (bank2,0x03,RW)

This register controls the setting of GVIF3 receiver.

7	6	5	4	3	2	1	0
GVIF3RX3_DROP_SOURCE_DATA_GVIFID_1[7:0]							
RW-1	RW-1	RW-1	RW-1	RW-1	RW-1	RW-1	RW-1

Bit7-0 : GVIF3RX3_DROP_SOURCE_DATA_GVIFID_1

These bits set the GVIFID (video stream GVIFID) of received video data at the GVIF3 receiver 3 to be deleted from GVIF3 transmitter output to the downstream GVIF3 device.

Deleted video data is not transmitted to the downstream GVIF devices in the daisy chain.

For Desay

MIPI Transmitter 0_0 Setup - 21 : MIPI transmitter 0_0 setup 21 (bank2,0x05,RW)

This register controls the setting of the MIPI transmitter.

7	6	5	4	3	2	1	0
MIPI_TX0_0_ALTERNATE_SKEW_CAL_LENGTH[7:0]							
RW-0	RW-0	RW-1	RW-0	RW-0	RW-0	RW-0	RW-0

Bit7-0 : MIPI_TX0_0_ALTERNATE_SKEW_CAL_LENGTH

These bits set the calibration length of the Alternate Calibration Sequence for MIPI output (Port 0, Sub port 0).

Calibration Length (UI) = MIPI_TX0_0_ALTERNATE_SKEW_CAL_LENGTH×4096 + 64

For Desay

MIPI Transmitter 0_1 Setup - 21 : MIPI transmitter 0_1 setup 21 (bank2,0x06,RW)

This register controls the setting of the MIPI transmitter.

7	6	5	4	3	2	1	0
MIPI_TX0_1_ALTERNATE_SKEW_CAL_LENGTH[7:0]							
RW-0	RW-0	RW-1	RW-0	RW-0	RW-0	RW-0	RW-0

Bit7-0 : MIPI_TX0_1_ALTERNATE_SKEW_CAL_LENGTH

These bits set the calibration length of the Alternate Calibration Sequence for MIPI output (Port 0, Sub port 1).

Calibration Length (UI) = MIPI_TX0_1_ALTERNATE_SKEW_CAL_LENGTH×4096 + 64

For Desay

MIPI Transmitter 1_2 Setup - 21 : MIPI transmitter 1_2 setup 21 (bank2,0x07,RW)

This register controls the setting of the MIPI transmitter.

7	6	5	4	3	2	1	0
MIPI_TX1_2_ALTERNATE_SKEW_CAL_LENGTH[7:0]							
RW-0	RW-0	RW-1	RW-0	RW-0	RW-0	RW-0	RW-0

Bit7-0 : MIPI_TX1_2_ALTERNATE_SKEW_CAL_LENGTH

These bits set the calibration length of the Alternate Calibration Sequence for MIPI output (Port 1, Sub port 2).

Calibration Length (UI) = MIPI_TX1_2_ALTERNATE_SKEW_CAL_LENGTH×4096 + 64

For Desay

MIPI Transmitter 1_3 Setup - 21 : MIPI transmitter 1_3 setup 21 (bank2,0x08,RW)

This register controls the setting of the MIPI transmitter.

7	6	5	4	3	2	1	0
MIPI_TX1_3_ALTERNATE_SKEW_CAL_LENGTH[7:0]							
RW-0	RW-0	RW-1	RW-0	RW-0	RW-0	RW-0	RW-0

Bit7-0 : MIPI_TX1_3_ALTERNATE_SKEW_CAL_LENGTH

These bits set the calibration length of the Alternate Calibration Sequence for MIPI output (Port 1, Sub port 3).

Calibration Length (UI) = MIPI_TX1_3_ALTERNATE_SKEW_CAL_LENGTH×4096 + 64

For Desay

MIPI Transmitter 0_1 Setup - 1 : MIPI transmitter 0_1 setup 1 (bank2,0x4D,RW)

This register controls the setting of the MIPI transmitter.

7	6	5	4	3	2	1	0
—	—	—	—	MIPI_TX0_1_LANE_NUMBER[3:0]			
RW-0	RW-0	RW-0	RW-1	RW-0	RW-1	RW-0	RW-0

Bit3-0 : MIPI_TX0_1_LANE_NUMBER

These bits set the number of the used lanes of MIPI output (Port 0, Sub port 1).

The lanes are assigned from Channel 0 for the number of the used lanes.

0000 : Reserved
0001 : 1Lane
0010 : 2Lane
0011 : Reserved
0100 : 4Lane (This should be selected when the Sub port 1 is not used.)
0101-1111 : Reserved

For Desay

MIPI Transmitter 0_1 Setup - 2 : MIPI transmitter 0_1 setup 2 (bank2,0x4E,RW)

This register controls the setting of the MIPI transmitter.

7	6	5	4	3	2	1	0
MIPI_TX0_1_TLPX_DATA[7:0]							
RW-0	RW-0	RW-1	RW-0	RW-0	RW-0	RW-0	RW-0

Bit7-0 : MIPI_TX0_1_TLPX_DATA

These bits set the TLPX_DATA parameter of MIPI output (Port 0, Sub port 1).

For Desay

MIPI Transmitter 0_1 Setup - 3 : MIPI transmitter 0_1 setup 3 (bank2,0x4F,RW)

This register controls the setting of the MIPI transmitter.

7	6	5	4	3	2	1	0
MIPI_TX0_1_THS_PREPARE[7:0]							
RW-0	RW-0	RW-1	RW-0	RW-0	RW-0	RW-0	RW-0

Bit7-0 : MIPI_TX0_1_THS_PREPARE

These bits set the LSB 8 bits ([7:0]) of the THS_PREPARE parameter of MIPI output (Port 0, Sub port 1).

For Desay

MIPI Transmitter 0_1 Setup - 4 : MIPI transmitter 0_1 setup 4 (bank2,0x50,RW)

This register controls the setting of the MIPI transmitter.

7	6	5	4	3	2	1	0
MIPI_TX0_1_HALFRATE_MODE_ENABLE[3:0]				MIPI_TX0_1_THS_TRAIL[9:8]		MIPI_TX0_1_THS_PREPARE[9:8]	
RW-0	RW-0	RW-0	RW-0	RW-0	RW-0	RW-0	RW-0

Bit7-4 : MIPI_TX0_1_HALFRATE_MODE_ENABLE

These bits enable or disable the half rate mode of MIPI output (Port 0, Sub port 0).

0000: Disable
0001: Enable

Bit3-2 : MIPI_TX0_1_THS_TRAIL

These bits set the MSB 2 bits ([9:8]) of the THS_TRAIL parameter of MIPI output (Port 0, Sub port 1).

Bit1-0 : MIPI_TX0_1_THS_PREPARE

These bits set the MSB 2 bits ([9:8]) of the THS_PREPARE parameter of MIPI output (Port 0, Sub port 1).

For Desay

MIPI Transmitter 0_1 Setup - 5 : MIPI transmitter 0_1 setup 5 (bank2,0x51,RW)

This register controls the setting of the MIPI transmitter.

7	6	5	4	3	2	1	0
MIPI_TX0_1_THS_ZERO[7:0]							
RW-0	RW-0	RW-1	RW-0	RW-0	RW-0	RW-0	RW-0

Bit7-0 : MIPI_TX0_1_THS_ZERO

These bits set the THS_ZERO parameter of MIPI output (Port 0, Sub port 1).

For Desay

MIPI Transmitter 0_1 Setup - 6 : MIPI transmitter 0_1 setup 6 (bank2,0x52,RW)

This register controls the setting of the MIPI transmitter.

7	6	5	4	3	2	1	0
MIPI_TX0_1_THS_TRAIL[7:0]							
RW-0	RW-0	RW-1	RW-0	RW-0	RW-0	RW-0	RW-0

Bit7-0 : MIPI_TX0_1_THS_TRAIL

These bits set the LSB 8 bits ([7:0]) of the THS_TRAIL parameter of MIPI output (Port 0, Sub port 1).

For Desay

MIPI Transmitter 0_1 Setup - 7 : MIPI transmitter 0_1 setup 7 (bank2,0x53,RW)

This register controls the setting of the MIPI transmitter.

7	6	5	4	3	2	1	0
MIPI_TX0_1_TLPX_CLK[7:0]							
RW-0	RW-0	RW-1	RW-0	RW-0	RW-0	RW-0	RW-0

Bit7-0 : MIPI_TX0_1_TLPX_CLK

These bits set the TLPX_CLK parameter of MIPI output (Port 0, Sub port 1).

For Desay

MIPI Transmitter 0_1 Setup - 8 : MIPI transmitter 0_1 setup 8 (bank2,0x54,RW)

This register controls the setting of the MIPI transmitter.

7	6	5	4	3	2	1	0
MIPI_TX0_1_TCLK_PREPARE1[7:0]							
RW-0	RW-0	RW-1	RW-0	RW-0	RW-0	RW-0	RW-0

Bit7-0 : MIPI_TX0_1_TCLK_PREPARE1

These bits set the LSB 8 bits ([7:0]) of the TCLK_PREPARE1 parameter of MIPI output (Port 0, Sub port 1).

For Desay

MIPI Transmitter 0_1 Setup - 9 : MIPI transmitter 0_1 setup 9 (bank2,0x55,RW)

This register controls the setting of the MIPI transmitter.

7	6	5	4	3	2	1	0
—	—	—	—	MIPI_TX0_1_TCLK_TRAIL[9:8]		MIPI_TX0_1_TCLK_PREPARE1[9:8]	
RW-0	RW-0	RW-0	RW-0	RW-0	RW-0	RW-0	RW-0

Bit3-2 : MIPI_TX0_1_TCLK_TRAIL

These bits set the MSB 2 bits ([9:8]) of the TCLK_TRAIL parameter of MIPI output (Port 0, Sub port 1).

Bit1-0 : MIPI_TX0_1_TCLK_PREPARE1

These bits set the MSB 2 bits ([9:8]) of the TCLK_PREPARE1 parameter of MIPI output (Port 0, Sub port 1).

For Desay

MIPI Transmitter 0_1 Setup - 10 : MIPI transmitter 0_1 setup 10 (bank2,0x56,RW)

This register controls the setting of the MIPI transmitter.

7	6	5	4	3	2	1	0
MIPI_TX0_1_THS_EXIT[7:0]							
RW-0	RW-0	RW-1	RW-0	RW-0	RW-0	RW-0	RW-0

Bit7-0 : MIPI_TX0_1_THS_EXIT

These bits set the THS_EXIT parameter of MIPI output (Port 0, Sub port 1).

For Desay

MIPI Transmitter 0_1 Setup - 11 : MIPI transmitter 0_1 setup 11 (bank2,0x57,RW)

This register controls the setting of the MIPI transmitter.

7	6	5	4	3	2	1	0
MIPI_TX0_1_TCLK_TRAIL[7:0]							
RW-0	RW-0	RW-1	RW-0	RW-0	RW-0	RW-0	RW-0

Bit7-0 : MIPI_TX0_1_TCLK_TRAIL

These bits set the LSB 8 bits ([7:0]) of the TCLK_TRAIL parameter of MIPI output (Port 0, Sub port 1).

For Desay

MIPI Transmitter 0_1 Setup - 12 : MIPI transmitter 0_1 setup 12 (bank2,0x58,RW)

This register controls the setting of the MIPI transmitter.

7	6	5	4	3	2	1	0
MIPI_TX0_MIRROR_MODE	—	—	MIPI_TX0_1_SELECT	—	—	—	—
RW-0	RW-0	RW-0	RW-0	RW-1	RW-1	RW-0	RW-0

Bit7 : MIPI_TX0_MIRROR_MODE

This bit enables or disables the mirroring between the Sub port 0 and Sub port 1 of MIPI output (Port 0). The Sub port 1 outputs the same data as Sub port 0.

0: Disable
1: Enable

Bit4 : MIPI_TX0_1_SELECT

This bit sets the assignment of MIPI signal for pins. (Sub port 1)

0: Not assign
1: Assign

For Desay

MIPI Transmitter 0_1 Setup - 14 : MIPI transmitter 0_1 setup 14 (bank2,0x5A,RW)

This register controls the setting of the MIPI transmitter.

7	6	5	4	3	2	1	0
MIPI_TX0_1_TCLK_PREPARE2[7:0]							
RW-0	RW-0	RW-1	RW-0	RW-0	RW-0	RW-0	RW-0

Bit7-0 : MIPI_TX0_1_TCLK_PREPARE2

These bits set the TCLK_PREPARE2 parameter of MIPI output (Port 0, Sub port 1).

For Desay

MIPI Transmitter 0_1 Setup - 16 : MIPI transmitter 0_1 setup 16 (bank2,0x5D,RW)

This register controls the setting of the MIPI transmitter.

7	6	5	4	3	2	1	0
MIPI_TX0_1_UNLOADER_SELECT[7:0]							
RW-0	RW-0	RW-0	RW-0	RW-1	RW-1	RW-1	RW-1

Bit7-0 : MIPI_TX0_1_UNLOADER_SELECT

These bits set the module number of Unloader which is connected to sub port 1 of the video data output.

Each of the Unloaders can be connected to only one of sub ports.

The bit number indicates the module number of Unloader. The corresponding bits should be set to " 1 " to select the Unloaders.

Bit0: Unloader 0

Bit1: Unloader 1

Bit2: Unloader 2

Bit3: Unloader 3

Bit4: Unloader 4 (CXD4964ER-W and CXD4984ER-W only)

Bit5: Unloader 5 (CXD4964ER-W and CXD4984ER-W only)

Bit6: Unloader 6 (CXD4964ER-W and CXD4984ER-W only)

Bit7: Unloader 7 (CXD4964ER-W and CXD4984ER-W only)

For Desay

GVIF3 Receiver 1 Setup - 1 : GVIF3 receiver 1 setup 1 (bank2,0x80,RW)

This register controls the setting of GVIF3 receiver.

7	6	5	4	3	2	1	0
GVIF3RX1_POL_INVERT	—	—	—	—	GVIF3RX1_FAIL_MASK_INTERVAL_ENABLE	—	GVIF3RX1_ENABLE
RW-0	RW-0	RW-0	RW-0	RW-1	RW-0	RW-1	RW-1

Bit7 : GVIF3RX1_POL_INVERT

This bit sets the polarity of serial input / output pin of the GVIF3 receiver 1.

When a coaxial cable is used, this bit must be set to " 0 ".

0: Not invert (the same as the pin name)
1: Invert

Bit2 : GVIF3RX1_FAIL_MASK_INTERVAL_ENABLE

This bit enables or disables the error detection frequency setting of the GVIF3 receiver 1.

0: Disable
1: Enable

Bit0 : GVIF3RX1_ENABLE

This bit enables or disables the GVIF3 receiver 1.

0: Disable
1: Enable

For Desay

GVIF3 Receiver 1 Setup - 5 : GVIF3 receiver 1 setup 5 (bank2,0x81,RW)

This register controls the setting of GVIF3 receiver.

7	6	5	4	3	2	1	0
—	—	—	—	GVIFID_GVIF3RX1_EXOR_OVR_ENABLE	—	—	—
RW-0	RW-0	RW-0	RW-0	RW-0	RW-0	RW-0	RW-0

Bit3 : GVIFID_GVIF3RX1_EXOR_OVR_ENABLE

This bit enables or disables the setting which convert the LSB 2 bits of GVIFID (video stream GVIFID) in serializer to the EXOR logical operated value between the LSB 2 bits of GVIFID (video stream GVIFID) in serializer and the 2 bits of the port number of GVIF3 receiver.

CXD4963GG-W or CXD4963ER-W or CXD4961ER-W should be connected to GVIF3 receiver by the point to point connection.

When this bit is set to " 1 ", the converted video stream GVIFID should be used to specify the video stream GVIFID after GVIF3 receiver.

0: Disable
1: Enable

For Desay

GVIF3 Receiver 1 Setup - 2 : GVIF3 receiver 1 setup 2 (bank2,0x83,RW)

This register controls the setting of GVIF3 receiver.

7	6	5	4	3	2	1	0
—	—	—	GVIF3RX1_SPEED[4:0]				
RW-0	RW-0	RW-0	RW-0	RW-0	RW-0	RW-0	RW-0

Bit4-0 : GVIF3RX1_SPEED

These bits set the data rate of serial input (downstream) of the GVIF3 receiver 1. These bits should be set according to the data rate setting in the GVIF*TX*_SPEED register in GVIF device which is connected to the GVIF3 receiver 1.

When the downstream GVIF device changes these bits with the register remote access function, these bits should be set after the data rate setting of the GVIF*TX*_SPEED register in GVIF device which is connected to the GVIF3 receiver 1 is completed.

When the upstream GVIF device changes these bits with the register remote access function, these bits should be set before the data rate setting of the GVIF*TX*_SPEED register in GVIF device which is connected to the GVIF3 receiver 1 is completed.

00000: 2.4 Gbps, 3.6 Gbps, 4.8 Gbps
00001-10011: Reserved
10100: 6.0 Gbps
10101: 7.2 Gbps
10110: 8.4 Gbps
10111: 9.6 Gbps
11000: 10.8 Gbps
11001: 12.0 Gbps
11010-11111: Reserved

For Desay

GVIF3 Receiver 1 Setup - 6 : GVIF3 receiver 1 setup 6 (bank2,0x86,RW)

This register controls the setting of GVIF3 receiver.

7	6	5	4	3	2	1	0
—	—	—	—	—	—	—	GVIF3RX1_FC_TEST_ENABLE
RW-0	RW-0	RW-0	RW-0	RW-0	RW-0	RW-0	RW-0

Bit0 : GVIF3RX1_FC_TEST_ENABLE

This bit enables or disables the downstream communication test of the GVIF3 receiver 1.

0: Disable
1: Enable

For Desay

GVIF3 Receiver 1 Monitor - 1 : GVIF3 receiver 1 monitor 1 (bank2,0x88,R)

This register indicates the status of GVIF3 receiver.

7	6	5	4	3	2	1	0
GVIF3RX1_FC_TEST_VMARGIN[7:0]							
R-0	R-0	R-0	R-0	R-0	R-0	R-0	R-0

Bit7-0 : GVIF3RX1_FC_TEST_VMARGIN

These bits indicate the value of VMARGIN parameter in the downstream communication test of the GVIF3 receiver 1.

For Desay

GVIF3 Receiver 1 Monitor - 2 : GVIF3 receiver 1 monitor 2 (bank2,0x8A,R)

This register indicates the status of GVIF3 receiver.

7	6	5	4	3	2	1	0
—	—	—	—	—	—	GVIF3RX1_FC_TEST_COMPLETE	GVIF3RX1_FC_TEST_ERROR
R-x	R-x	R-x	R-x	R-x	R-x	R-0	R-0

Bit1 : GVIF3RX1_FC_TEST_COMPLETE

This bit indicates the completion of the downstream communication test of the GVIF3 receiver 1.

0: Not completed
1: Complete

Bit0 : GVIF3RX1_FC_TEST_ERROR

This bit indicates the downstream communication test status of the GVIF3 receiver 1.

0: No error
1: Error

For Desay

MIPI Transmitter 0_0 Setup - 17 : MIPI transmitter 0_0 setup 17 (bank2,0x95,RW)

This register controls the setting of the MIPI transmitter.

7	6	5	4	3	2	1	0
—	—	—	—	MIPI_TX0_0_ALTERNATE_SKEW_CAL_ENABLE	MIPI_TX0_0_PREAMBLE_SKEW_CAL_ENABLE	MIPI_TX0_0_PERIODIC_SKEW_CAL_ENABLE	MIPI_TX0_0_INITIAL_SKEW_CAL_ENABLE
RW-0	RW-0	RW-0	RW-0	RW-0	RW-0	RW-0	RW-0

Bit3 : MIPI_TX0_0_ALTERNATE_SKEW_CAL_ENABLE

This bit enables or disables the Alternate Calibration Sequence of MIPI output (Port 0, Sub port 0).

0: Disable
1: Enable

Bit2 : MIPI_TX0_0_PREAMBLE_SKEW_CAL_ENABLE

This bit enables or disables the Preamble Sequence of MIPI output (Port 0, Sub port 0).

0: Disable
1: Enable

Bit1 : MIPI_TX0_0_PERIODIC_SKEW_CAL_ENABLE

This bit enables or disables the Periodic HS Skew Calibration Burst of MIPI output (Port 0, Sub port 0).

0: Disable
1: Enable

Bit0 : MIPI_TX0_0_INITIAL_SKEW_CAL_ENABLE

This bit enables or disables the Initial HS Skew Calibration Burst of MIPI output (Port 0, Sub port 0).

0: Disable
1: Enable

For Desay

MIPI Transmitter 0_0 Setup - 18 : MIPI transmitter 0_0 setup 18 (bank2,0x96,RW)

This register controls the setting of the MIPI transmitter.

7	6	5	4	3	2	1	0
MIPI_TX0_0_INITIAL_SKEW_CAL_LENGTH[7:0]							
RW-0	RW-0	RW-1	RW-0	RW-0	RW-0	RW-0	RW-0

Bit7-0 : MIPI_TX0_0_INITIAL_SKEW_CAL_LENGTH

These bits set the calibration length of the Initial HS Skew Calibration Burst for MIPI output (Port 0, Sub port 0).

Calibration Length (UI) = MIPI_TX0_0_INITIAL_SKEW_CAL_LENGTH×4096 + 40

For Desay

MIPI Transmitter 0_0 Setup - 19 : MIPI transmitter 0_0 setup 19 (bank2,0x97,RW)

This register controls the setting of the MIPI transmitter.

7	6	5	4	3	2	1	0
MIPI_TX0_0_PERIODIC_SKEW_CAL_LENGTH[7:0]							
RW-0	RW-0	RW-1	RW-0	RW-0	RW-0	RW-0	RW-0

Bit7-0 : MIPI_TX0_0_PERIODIC_SKEW_CAL_LENGTH

These bits set the calibration length of the Periodic HS Skew Calibration Burst for MIPI output (Port 0, Sub port 0).

Calibration Length (UI) = MIPI_TX0_0_PERIODIC_SKEW_CAL_LENGTH×256 + 40

For Desay

MIPI Transmitter 0_0 Setup - 20 : MIPI transmitter 0_0 setup 20 (bank2,0x98,RW)

This register controls the setting of the MIPI transmitter.

7	6	5	4	3	2	1	0
—	—	MIPI_TX0_0_PREAMBLE_SKEW_CAL_LENGTH[5:0]					
RW-0	RW-0	RW-1	RW-0	RW-0	RW-0	RW-0	RW-0

Bit5-0 : MIPI_TX0_0_PREAMBLE_SKEW_CAL_LENGTH

These bits set the calibration length of the Preamble Sequence for MIPI output (Port 0, Sub port 0).

Calibration Length (UI) = MIPI_TX0_0_PREAMBLE_SKEW_CAL_LENGTH×64 + 32

For Desay

MIPI Transmitter 0_1 Setup - 17 : MIPI transmitter 0_1 setup 17 (bank2,0x99,RW)

This register controls the setting of the MIPI transmitter.

7	6	5	4	3	2	1	0
—	—	—	—	MIPI_TX0_1_ALTERNATE_SKEW_CAL_ENABLE	MIPI_TX0_1_PREAMBLE_SKEW_CAL_ENABLE	MIPI_TX0_1_PERIODIC_SKEW_CAL_ENABLE	MIPI_TX0_1_INITIAL_SKEW_CAL_ENABLE
RW-0	RW-0	RW-0	RW-0	RW-0	RW-0	RW-0	RW-0

Bit3 : MIPI_TX0_1_ALTERNATE_SKEW_CAL_ENABLE

This bit enables or disables the Alternate Calibration Sequence of MIPI output (Port 0, Sub port 1).

0: Disable
1: Enable

Bit2 : MIPI_TX0_1_PREAMBLE_SKEW_CAL_ENABLE

This bit enables or disables the Preamble Sequence of MIPI output (Port 0, Sub port 1).

0: Disable
1: Enable

Bit1 : MIPI_TX0_1_PERIODIC_SKEW_CAL_ENABLE

This bit enables or disables the Periodic HS Skew Calibration Burst of MIPI output (Port 0, Sub port 1).

0: Disable
1: Enable

Bit0 : MIPI_TX0_1_INITIAL_SKEW_CAL_ENABLE

This bit enables or disables the Initial HS Skew Calibration Burst of MIPI output (Port 0, Sub port 1).

0: Disable
1: Enable

For Desay

MIPI Transmitter 0_1 Setup - 18 : MIPI transmitter 0_1 setup 18 (bank2,0x9A,RW)

This register controls the setting of the MIPI transmitter.

7	6	5	4	3	2	1	0
MIPI_TX0_1_INITIAL_SKEW_CAL_LENGTH[7:0]							
RW-0	RW-0	RW-1	RW-0	RW-0	RW-0	RW-0	RW-0

Bit7-0 : MIPI_TX0_1_INITIAL_SKEW_CAL_LENGTH

These bits set the calibration length of the Initial HS Skew Calibration Burst for MIPI output (Port 0, Sub port 1).

Calibration Length (UI) = MIPI_TX0_1_INITIAL_SKEW_CAL_LENGTH×4096 + 40

For Desay

MIPI Transmitter 0_1 Setup - 19 : MIPI transmitter 0_1 setup 19 (bank2,0x9B,RW)

This register controls the setting of the MIPI transmitter.

7	6	5	4	3	2	1	0
MIPI_TX0_1_PERIODIC_SKEW_CAL_LENGTH[7:0]							
RW-0	RW-0	RW-1	RW-0	RW-0	RW-0	RW-0	RW-0

Bit7-0 : MIPI_TX0_1_PERIODIC_SKEW_CAL_LENGTH

These bits set the calibration length of the Periodic HS Skew Calibration Burst for MIPI output (Port 0, Sub port 1).

Calibration Length (UI) = MIPI_TX0_1_PERIODIC_SKEW_CAL_LENGTH×256 + 40

For Desay

MIPI Transmitter 0_1 Setup - 20 : MIPI transmitter 0_1 setup 20 (bank2,0x9C,RW)

This register controls the setting of the MIPI transmitter.

7	6	5	4	3	2	1	0
—	—	MIPI_TX0_1_PREAMBLE_SKEW_CAL_LENGTH[5:0]					
RW-0	RW-0	RW-1	RW-0	RW-0	RW-0	RW-0	RW-0

Bit5-0 : MIPI_TX0_1_PREAMBLE_SKEW_CAL_LENGTH

These bits set the calibration length of the Preamble Sequence for MIPI output (Port 0, Sub port 1).

Calibration Length (UI) = MIPI_TX0_1_PREAMBLE_SKEW_CAL_LENGTH×64 + 32

For Desay

GVIF3 Receiver 1 Setup - 7 : GVIF3 receiver 1 setup 7 (bank2,0x9D,RW)

This register controls the setting of GVIF3 receiver.

7	6	5	4	3	2	1	0
GVIF3RX1_DROP_SOURCE_DATA_GVIFID_0[7:0]							
RW-1	RW-1	RW-1	RW-1	RW-1	RW-1	RW-1	RW-1

Bit7-0 : GVIF3RX1_DROP_SOURCE_DATA_GVIFID_0

These bits set the GVIFID (video stream GVIFID) of received video data at the GVIF3 receiver 1 to be deleted from GVIF3 transmitter output to the downstream GVIF3 device.

Deleted video data is not transmitted to the downstream GVIF devices in the daisy chain.

For Desay

Unloader 2 Setup - 1 : Unloader 2 setup 1 (bank2,0x9E,RW)

This register controls the setting of the video data transmission.

7	6	5	4	3	2	1	0
UNLOADER2_GVIF3RX_PORT_SELECT[1:0]		—	—	UNLOADER2_ECC_CRC_OVR_ENABLE	UNLOADER2_VIDEO_MUTE	—	UNLOADER2_SELECT
RW-0	RW-0	RW-0	RW-1	RW-0	RW-0	RW-0	RW-1

Bit7-6 : UNLOADER2_GVIF3RX_PORT_SELECT

These bits set the port number of GVIF3 receiver to be connected to the Unloader 2.

Bit3 : UNLOADER2_ECC_CRC_OVR_ENABLE

This bit enables or disables the ECC/CRC recalculation of the input video data which is stored in the Unloader 2.

When the frame extended mode is enable in serializer and the mute in the Unloader 2 turns on, this bit must be set to " 1 " prior to setting the VIDEO_OUTPUT_ENABLE_* register to " 1 ".

0: Disable
1: Enable

Bit2 : UNLOADER2_VIDEO_MUTE

This bit sets the mute of the input video data which is stored in the Unloader 2.

When the mute turns on, the black screen is transmitted instead of the input video data.

0: Mute OFF
1: Mute ON

Bit0 : UNLOADER2_SELECT

This bit enables or disables the Unloader 2.

0: Disable
1: Enable

For Desay

Unloader 2 Setup - 2 : Unloader 2 setup 2 (bank2,0x9F,RW)

This register controls the setting of the video data transmission.

7	6	5	4	3	2	1	0
UNLOADER2_TARGET_GVIFID[7:0]							
RW-0	RW-0	RW-0	RW-0	RW-0	RW-0	RW-0	RW-0

Bit7-0 : UNLOADER2_TARGET_GVIFID

These bits set the GVIFID (video stream GVIFID) of the input video data to be stored in the Unloader 2.

For Desay

Unloader 2 Monitor - 1 : Unloader 2 monitor 1 (bank2,0xA0,R)

This register indicates the status of the video data transmission.

7	6	5	4	3	2	1	0
UNLOADER2_GVIF_FORMAT[7:0]							
R-0	R-0	R-0	R-0	R-0	R-0	R-0	R-0

Bit7-0 : UNLOADER2_GVIF_FORMAT

These bits indicate the GVIF Format of the input video data which was stored in the Unloader 2.

0000 0001: RGB888 (When the video input interface in serializer is except for MIPI D-PHY CSI-2.)
0000 0010: RGB888 (When the video input interface in serializer is MIPI D-PHY CSI-2.)
0000 1000: YCbCr422 (YUV)
0001 0001: RAW8
0001 0010: RAW10
0001 0011: RAW12
0001 0100: RAW16
0001 0101: RAW20
0001 0110: The frame extended mode
1111 1111: Default

Others: Reserved

For Desay

Unloader 2 Setup - 3 : Unloader 2 setup 3 (bank2,0xA2,RW)

This register controls the setting of the video data transmission.

7	6	5	4	3	2	1	0
UNLOADER2_MIPITX_VCID_SELECT_0[3:0]				UNLOADER2_MIPITX_VCID_SELECT_0_ENABLE	UNLOADER2_MIPITX_VCID_OVR_0_ENABLE	—	—
RW-0	RW-0	RW-0	RW-0	RW-0	RW-0	RW-0	RW-0

Bit7-4 : UNLOADER2_MIPITX_VCID_SELECT_0

These bits set the Virtual Channel ID of the video data to be output from the Unloader 2.

Bit3 : UNLOADER2_MIPITX_VCID_SELECT_0_ENABLE

This bit enables the output setting of Virtual Channel ID number which is set by the UNLOADER2_MIPITX_VCID_SELECT_0 register.

When this bit is not enabled, the received data of all Virtual Channel ID is output.

0: Disable the output setting of Virtual Channel ID
1: Enable the output setting of Virtual Channel ID

Bit2 : UNLOADER2_MIPITX_VCID_OVR_0_ENABLE

This bit enables or disables the override-setting of Virtual Channel ID number in the Unloader 2.

0: Disable
1: Enable

For Desay

Unloader 2 Setup - 4 : Unloader 2 setup 4 (bank2,0xA4,RW)

This register controls the setting of the video data transmission.

7	6	5	4	3	2	1	0
UNLOADER2_MIPITX_VCID_SELECT_1[3:0]				UNLOADER2_MIPITX_VCID_SELECT_1_ENABLE	—	—	—
RW-0	RW-0	RW-0	RW-0	RW-0	RW-0	RW-1	RW-1

Bit7-4 : UNLOADER2_MIPITX_VCID_SELECT_1

These bits set the Virtual Channel ID of the video data to be output from the Unloader 2.

Bit3 : UNLOADER2_MIPITX_VCID_SELECT_1_ENABLE

This bit enables the output setting of Virtual Channel ID number which is set by the UNLOADER2_MIPITX_VCID_SELECT_1 register.

When this bit is not enabled, the received data of all Virtual Channel ID is output.

0: Disable the output setting of Virtual Channel ID
1: Enable the output setting of Virtual Channel ID

For Desay

Unloader 3 Setup - 1 : Unloader 3 setup 1 (bank2,0xA7,RW)

This register controls the setting of the video data transmission.

7	6	5	4	3	2	1	0
UNLOADER3_GVIF3RX_PORT_SELECT[1:0]		—	—	UNLOADER3_ECC_CRC_OVR_ENABLE	UNLOADER3_VIDEO_MUTE	—	UNLOADER3_SELECT
RW-0	RW-0	RW-0	RW-1	RW-0	RW-0	RW-0	RW-1

Bit7-6 : UNLOADER3_GVIF3RX_PORT_SELECT

These bits set the port number of GVIF3 receiver to be connected to the Unloader 3.

Bit3 : UNLOADER3_ECC_CRC_OVR_ENABLE

This bit enables or disables the ECC/CRC recalculation of the input video data which is stored in the Unloader 3.

When the frame extended mode is enable in serializer and the mute in the Unloader 3 turns on, this bit must be set to " 1 " prior to setting the VIDEO_OUTPUT_ENABLE_* register to " 1 ".

0: Disable
1: Enable

Bit2 : UNLOADER3_VIDEO_MUTE

This bit sets the mute of the input video data which is stored in the Unloader 3.

When the mute turns on, the black screen is transmitted instead of the input video data.

0: Mute OFF
1: Mute ON

Bit0 : UNLOADER3_SELECT

This bit enables or disables the Unloader 3.

0: Disable
1: Enable

For Desay

Unloader 3 Setup - 2 : Unloader 3 setup 2 (bank2,0xA8,RW)

This register controls the setting of the video data transmission.

7	6	5	4	3	2	1	0
UNLOADER3_TARGET_GVIFID[7:0]							
RW-0	RW-0	RW-0	RW-0	RW-0	RW-0	RW-0	RW-0

Bit7-0 : UNLOADER3_TARGET_GVIFID

These bits set the GVIFID (video stream GVIFID) of the input video data to be stored in the Unloader 3.

For Desay

Unloader 3 Monitor - 1 : Unloader 3 monitor 1 (bank2,0xA9,R)

This register indicates the status of the video data transmission.

7	6	5	4	3	2	1	0
UNLOADER3_GVIF_FORMAT[7:0]							
R-0	R-0	R-0	R-0	R-0	R-0	R-0	R-0

Bit7-0 : UNLOADER3_GVIF_FORMAT

These bits indicate the GVIF Format of the input video data which was stored in the Unloader 3.

0000 0001: RGB888 (When the video input interface in serializer is except for MIPI D-PHY CSI-2.)
0000 0010: RGB888 (When the video input interface in serializer is MIPI D-PHY CSI-2.)
0000 1000: YCbCr422 (YUV)
0001 0001: RAW8
0001 0010: RAW10
0001 0011: RAW12
0001 0100: RAW16
0001 0101: RAW20
0001 0110: The frame extended mode
1111 1111: Default

Others: Reserved

For Desay

Unloader 3 Setup - 3 : Unloader 3 setup 3 (bank2,0xAB,RW)

This register controls the setting of the video data transmission.

7	6	5	4	3	2	1	0
UNLOADER3_MIPITX_VCID_SELECT_0[3:0]				UNLOADER3_MIPITX_VCID_SELECT_0_ENABLE	UNLOADER3_MIPITX_VCID_OVR_0_ENABLE	—	—
RW-0	RW-0	RW-0	RW-0	RW-0	RW-0	RW-0	RW-0

Bit7-4 : UNLOADER3_MIPITX_VCID_SELECT_0

These bits set the Virtual Channel ID of the video data to be output from the Unloader 3.

Bit3 : UNLOADER3_MIPITX_VCID_SELECT_0_ENABLE

This bit enables the output setting of Virtual Channel ID number which is set by the UNLOADER3_MIPITX_VCID_SELECT_0 register.

When this bit is not enabled, the received data of all Virtual Channel ID is output.

0: Disable the output setting of Virtual Channel ID
1: Enable the output setting of Virtual Channel ID

Bit2 : UNLOADER3_MIPITX_VCID_OVR_0_ENABLE

This bit enables or disables the override-setting of Virtual Channel ID number in the Unloader 3.

0: Disable
1: Enable

For Desay

Unloader 3 Setup - 4 : Unloader 3 setup 4 (bank2,0xAD,RW)

This register controls the setting of the video data transmission.

7	6	5	4	3	2	1	0
UNLOADER3_MIPITX_VCID_SELECT_1[3:0]				UNLOADER3_MIPITX_VCID_SELECT_1_ENABLE	—	—	—
RW-0	RW-0	RW-0	RW-0	RW-0	RW-0	RW-1	RW-1

Bit7-4 : UNLOADER3_MIPITX_VCID_SELECT_1

These bits set the Virtual Channel ID of the video data to be output from the Unloader 3.

Bit3 : UNLOADER3_MIPITX_VCID_SELECT_1_ENABLE

This bit enables the output setting of Virtual Channel ID number which is set by the UNLOADER3_MIPITX_VCID_SELECT_1 register.

When this bit is not enabled, the received data of all Virtual Channel ID is output.

0: Disable the output setting of Virtual Channel ID
1: Enable the output setting of Virtual Channel ID

For Desay

GVIF3 Receiver 1 Setup - 3 : GVIF3 receiver 1 setup 3 (bank2,0xE4,RW)

This register controls the setting of GVIF3 receiver.

7	6	5	4	3	2	1	0
—	—	—	—	—	—	—	GVIF3RX1_COAX_MODE
RW-0	RW-1	RW-0	RW-0	RW-0	RW-0	RW-0	RW-0

Bit0 : GVIF3RX1_COAX_MODE

These bits set the serial cable type which is used for the GVIF3 receiver 1.

When a coaxial cable is used, these bits must be set prior to setting other registers.

0: STP cable
1: COAX cable

For Desay

GVIF3 receiver 1 Setup - 9 : GVIF3 receiver 1 setup 9 (bank2,0xE9,RW)

This register controls the setting of GVIF3 receiver.

7	6	5	4	3	2	1	0
GVIF3RX1_EQ_MODE[7:0]							
RW-1	RW-1	RW-1	RW-1	RW-1	RW-0	RW-1	RW-1

Bit7-0 : GVIF3RX1_EQ_MODE

These bits set EQ parameter according to the serial cable type and data rate which is used for the GVIF3 receiver 1.

After these bits are changed, the GVIF3RX1_ENABLE register must be set to " 0 " and then it must be set to " 1 ".

0100 0000: STP cable, Intra/Inter-board differential connection, the GVIF3RX1_SPEED register setting 8.4 to 12.0 Gbps (Low Gain Mode. This setting lowers the maximum limit of equalizer gain.)
1010 1111: COAX cable, the GVIF3RX1_SPEED register setting 2.4 to 3.6 Gbps
1010 1101: COAX cable, the GVIF3RX1_SPEED register setting 4.8 to 7.2 Gbps
1101 1101: STP cable, the GVIF3RX1_SPEED register setting 8.4 to 9.6 Gbps
1111 1011: STP cable, Intra/Inter-board differential connection, the GVIF3RX1_SPEED register setting 2.4 to 7.2 Gbps (Default)

For Desay

Failure Diagnosis Monitor - 4 : Failure Diagnosis Monitor 4 (bank2,0xFA,R)

This register indicates the status of the failure diagnosis.

7	6	5	4	3	2	1	0
—	—	—	—	GVIF3RX0_NEG_PIN_L_ERROR	GVIF3RX0_NEG_PIN_H_ERROR	GVIF3RX0_POS_PIN_L_ERROR	GVIF3RX0_POS_PIN_H_ERROR
R-x	R-x	R-x	R-x	R-0	R-0	R-0	R-0

Bit3 : GVIF3RX0_NEG_PIN_L_ERROR

This bit indicates the negative pin status of the GVIF3 receiver 0.

0: Normal
1: Fail (Low Voltage)

Bit2 : GVIF3RX0_NEG_PIN_H_ERROR

This bit indicates the negative pin status of the GVIF3 receiver 0.

0: Normal
1: Fail (High Voltage)

Bit1 : GVIF3RX0_POS_PIN_L_ERROR

This bit indicates the positive pin status of the GVIF3 receiver 0.

0: Normal
1: Fail (Low Voltage)

Bit0 : GVIF3RX0_POS_PIN_H_ERROR

This bit indicates the positive pin status of the GVIF3 receiver 0.

0: Normal
1: Fail (High Voltage)

For Desay

Failure Diagnosis Monitor - 5 : Failure Diagnosis Monitor 5 (bank2,0xFB,R)

This register indicates the status of the failure diagnosis.

7	6	5	4	3	2	1	0
—	—	—	—	GVIF3RX1_NEG_PIN_L_ERROR	GVIF3RX1_NEG_PIN_H_ERROR	GVIF3RX1_POS_PIN_L_ERROR	GVIF3RX1_POS_PIN_H_ERROR
R-x	R-x	R-x	R-x	R-0	R-0	R-0	R-0

Bit3 : GVIF3RX1_NEG_PIN_L_ERROR

This bit indicates the negative pin status of the GVIF3 receiver 1.

0: Normal
1: Fail (Low Voltage)

Bit2 : GVIF3RX1_NEG_PIN_H_ERROR

This bit indicates the negative pin status of the GVIF3 receiver 1.

0: Normal
1: Fail (High Voltage)

Bit1 : GVIF3RX1_POS_PIN_L_ERROR

This bit indicates the positive pin status of the GVIF3 receiver 1.

0: Normal
1: Fail (Low Voltage)

Bit0 : GVIF3RX1_POS_PIN_H_ERROR

This bit indicates the positive pin status of the GVIF3 receiver 1.

0: Normal
1: Fail (High Voltage)

For Desay

Failure Diagnosis Monitor - 6 : Failure Diagnosis Monitor 6 (bank2,0xFD,R)

This register indicates the status of the failure diagnosis.

7	6	5	4	3	2	1	0
—	—	—	—	GVIF3RX2_NEG_PIN_L_ERROR	GVIF3RX2_NEG_PIN_H_ERROR	GVIF3RX2_POS_PIN_L_ERROR	GVIF3RX2_POS_PIN_H_ERROR
R-x	R-x	R-x	R-x	R-0	R-0	R-0	R-0

Bit3 : GVIF3RX2_NEG_PIN_L_ERROR

This bit indicates the negative pin status of the GVIF3 receiver 2.

0: Normal
1: Fail (Low Voltage)

Bit2 : GVIF3RX2_NEG_PIN_H_ERROR

This bit indicates the negative pin status of the GVIF3 receiver 2.

0: Normal
1: Fail (High Voltage)

Bit1 : GVIF3RX2_POS_PIN_L_ERROR

This bit indicates the positive pin status of the GVIF3 receiver 2.

0: Normal
1: Fail (Low Voltage)

Bit0 : GVIF3RX2_POS_PIN_H_ERROR

This bit indicates the positive pin status of the GVIF3 receiver 2.

0: Normal
1: Fail (High Voltage)

For Desay

Failure Diagnosis Monitor - 7 : Failure Diagnosis Monitor 7 (bank2,0xFE,R)

This register indicates the status of the failure diagnosis.

7	6	5	4	3	2	1	0
—	—	—	—	GVIF3RX3_NEG_PIN_L_ERROR	GVIF3RX3_NEG_PIN_H_ERROR	GVIF3RX3_POS_PIN_L_ERROR	GVIF3RX3_POS_PIN_H_ERROR
R-x	R-x	R-x	R-x	R-0	R-0	R-0	R-0

Bit3 : GVIF3RX3_NEG_PIN_L_ERROR

This bit indicates the negative pin status of the GVIF3 receiver 3.

0: Normal
1: Fail (Low Voltage)

Bit2 : GVIF3RX3_NEG_PIN_H_ERROR

This bit indicates the negative pin status of the GVIF3 receiver 3.

0: Normal
1: Fail (High Voltage)

Bit1 : GVIF3RX3_POS_PIN_L_ERROR

This bit indicates the positive pin status of the GVIF3 receiver 3.

0: Normal
1: Fail (Low Voltage)

Bit0 : GVIF3RX3_POS_PIN_H_ERROR

This bit indicates the positive pin status of the GVIF3 receiver 3.

0: Normal
1: Fail (High Voltage)

For Desay

SSCG1 Setup - 1 : SSCG1 setup 1 (bank3,0x00,RW)

This register controls the setting of SSCG.

The VIDEO_OUTPUT_ENABLE_* register must be set to “ 0 ” before the values of this register are changed, and then the VIDEO_OUTPUT_ENABLE_* register must be set to “ 1 ” after they are changed.

7	6	5	4	3	2	1	0
—	—	—	—	—	—	—	SSCG_1_ENABLE
RW-0	RW-0	RW-1	RW-0	RW-0	RW-0	RW-0	RW-0

Bit0 : SSCG_1_ENABLE

This bit should be set the same value as the logical value of the SSCG_0_ENABLE register.

For Desay

SSCG1 Setup - 2 : SSCG1 setup 2 (bank3,0x01,RW)

This register controls the setting of SSCG.

The VIDEO_OUTPUT_ENABLE_* register must be set to “ 0 ” before the values of this register are changed, and then the VIDEO_OUTPUT_ENABLE_* register must be set to “ 1 ” after they are changed.

7	6	5	4	3	2	1	0
—	—	—	—	—	SSCG_1_SPREAD_RATE[8:8]	SSCG_1_MODULATION_FREQ[9:8]	
RW-0	RW-0	RW-0	RW-0	RW-0	RW-0	RW-0	RW-0

Bit2 : SSCG_1_SPREAD_RATE

These bits should be set the same value as the logical value of the SSCG_0_SPREAD_RATE register.

Bit1-0 : SSCG_1_MODULATION_FREQ

These bits should be set the same value as the logical value of the SSCG_0_MODULATION_FREQ register.

For Desay

SSCG1 Setup - 3 : SSCG1 setup 3 (bank3,0x02,RW)

This register controls the setting of SSCG.

The VIDEO_OUTPUT_ENABLE_* register must be set to “ 0 ” before the values of this register are changed, and then the VIDEO_OUTPUT_ENABLE_* register must be set to “ 1 ” after they are changed.

7	6	5	4	3	2	1	0
SSCG_1_MODULATION_FREQ[7:0]							
RW-0	RW-0	RW-0	RW-0	RW-0	RW-0	RW-0	RW-0

Bit7-0 : SSCG_1_MODULATION_FREQ

These bits should be set the same value as the logical value of the SSCG_0_MODULATION_FREQ register.

For Desay

SSCG1 Setup - 4 : SSCG1 setup 4 (bank3,0x03,RW)

This register controls the setting of SSCG.

The VIDEO_OUTPUT_ENABLE_* register must be set to “ 0 ” before the values of this register are changed, and then the VIDEO_OUTPUT_ENABLE_* register must be set to “ 1 ” after they are changed.

7	6	5	4	3	2	1	0
SSCG_1_SPREAD_RATE[7:0]							
RW-0	RW-0	RW-0	RW-0	RW-0	RW-0	RW-0	RW-0

Bit7-0 : SSCG_1_SPREAD_RATE

These bits should be set the same value as the logical value of the SSCG_0_SPREAD_RATE register.

For Desay

PLL1 Setup - 6 : PLL1 setup 6 (bank3,0x43,RW)

This register controls the setting of PLL.

7	6	5	4	3	2	1	0
MIPI_TX1_CLK_FIXED_MODE_PLL_VALUE2[15:8]							
RW-0	RW-0	RW-0	RW-0	RW-0	RW-0	RW-0	RW-0

Bit7-0 : MIPI_TX1_CLK_FIXED_MODE_PLL_VALUE2

These bits set the MSB 8 bits ([15:8]) of the PLL parameter of MIPI output (Port 1) with the clock fixed mode.

The value of the following equation should be set.

MIPI_TX1_CLK_FIXED_MODE_PLL_VALUE2[15] = 0

MIPI_TX1_CLK_FIXED_MODE_PLL_VALUE2[14:0] = fractional part of (DR x D / (System clock frequency)) × 2 ^ 15

DR: MIPI D-PHY data rate (Mbps / Lane)

The system clock frequency is determined by the following.

External system clock input mode: the frequency of external system clock

Internal system clock mode: 20 (MHz)

The value of D is determined by the value of the MIPI_TX1_CLK_FIXED_MODE_FREQ_RANGE register.

0001-0011 : D=1
0100-0110 : D=2
0111-1001 : D=4
1010-1100 : D=8
1101-1111 : D=16

For Desay

PLL1 Setup - 7 : PLL1 setup 7 (bank3,0x44,RW)

This register controls the setting of PLL.

7	6	5	4	3	2	1	0
MIPI_TX1_CLK_FIXED_MODE_PLL_VALUE2[7:0]							
RW-0	RW-0	RW-0	RW-0	RW-0	RW-0	RW-0	RW-0

Bit7-0 : MIPI_TX1_CLK_FIXED_MODE_PLL_VALUE2

These bits set the LSB 8 bits ([7:0]) of the PLL parameter of MIPI output (Port 1) with the clock fixed mode.

The value of the following equation should be set.

MIPI_TX1_CLK_FIXED_MODE_PLL_VALUE2[15] = 0

MIPI_TX1_CLK_FIXED_MODE_PLL_VALUE2[14:0] = fractional part of (DR x D / (System clock frequency)) × 2 ^ 15

DR: MIPI D-PHY data rate (Mbps / Lane)

The system clock frequency is determined by the following.

External system clock input mode: the frequency of external system clock

Internal system clock mode: 20 (MHz)

The value of D is determined by the value of the MIPI_TX1_CLK_FIXED_MODE_FREQ_RANGE register.

0001-0011 : D=1
0100-0110 : D=2
0111-1001 : D=4
1010-1100 : D=8
1101-1111 : D=16

For Desay

PLL1 Setup - 1 : PLL1 setup 1 (bank3,0x45,RW)

This register controls the setting of PLL.

7	6	5	4	3	2	1	0
MIPI_TX1_CLK_FIXED_MODE_ENABLE_0	—	—	—	—	MIPI_TX1_CLK_FIXED_MODE_PLL_VALUE[10:8]		
RW-0	RW-0	RW-0	RW-0	RW-0	RW-0	RW-0	RW-0

Bit7 : MIPI_TX1_CLK_FIXED_MODE_ENABLE_0

This bit enables or disables the setting of the clock fixed mode of MIPI output (Port 1).

When the clock regeneration mode is set by the MIPI_TX1_CLK_FIXED_MODE register, this bit should be set to " 0 ".

0: Disable
1: Enable

Bit2-0 : MIPI_TX1_CLK_FIXED_MODE_PLL_VALUE

These bits set the MSB 3 bits ([10:8]) of the PLL parameter of MIPI output (Port 1) with the clock fixed mode.

The value of the following equation should be set. (Round down to the nearest integer.)

MIPI_TX1_CLK_FIXED_MODE_PLL_VALUE = Integer part of (DR × D / (System clock frequency))

DR: MIPI D-PHY data rate (Mbps / Lane)

The system clock frequency is determined by the following.

External system clock input mode: the frequency of external system clock

Internal system clock mode: 20 (MHz)

The value of D is determined by the value of the MIPI_TX1_CLK_FIXED_MODE_FREQ_RANGE register.

0001-0011 : D=1
0100-0110 : D=2
0111-1001 : D=4
1010-1100 : D=8
1101-1111 : D=16

When the internal system clock is used, the actual MIPI D-PHY data rate is the value of the following equation.

Maximum : DR × (21 / 20) × ((100 + maximum spread rate of SSCG(%)) / 100)

Minimum : DR × ((100 - maximum spread rate of SSCG(%)) / 100)

When the external system clock is used, the actual MIPI D-PHY data rate is the value of the following equation.

For Desay

Maximum : DR ×((100 + maximum spread rate of SSCG(%)) / 100)

Minimum : DR × ((100 - maximum spread rate of SSCG(%)) / 100)

For Desay

PLL1 Setup - 2 : PLL1 setup 2 (bank3,0x46,RW)

This register controls the setting of PLL.

7	6	5	4	3	2	1	0
MIPI_TX1_CLK_FIXED_MODE_PLL_VALUE[7:0]							
RW-0	RW-0	RW-0	RW-0	RW-0	RW-0	RW-0	RW-0

Bit7-0 : MIPI_TX1_CLK_FIXED_MODE_PLL_VALUE

These bits set the LSB 8 bits ([7:0]) of the PLL parameter of MIPI output (Port 1) with the clock fixed mode.

The value of the following equation should be set. (Round down to the nearest integer.)

MIPI_TX1_CLK_FIXED_MODE_PLL_VALUE = Integer part of (DR × D / (System clock frequency))

DR: MIPI D-PHY data rate (Mbps / Lane)

The system clock frequency is determined by the following.

External system clock input mode: the frequency of external system clock

Internal system clock mode: 20 (MHz)

The value of D is determined by the value of the MIPI_TX1_CLK_FIXED_MODE_FREQ_RANGE register.

0001-0011 : D=1
0100-0110 : D=2
0111-1001 : D=4
1010-1100 : D=8
1101-1111 : D=16

When the internal system clock is used, the actual MIPI D-PHY data rate is the value of the following equation.

Maximum : DR × (21 / 20) × ((100 + maximum spread rate of SSCG(%)) / 100)

Minimum : DR × ((100 - maximum spread rate of SSCG(%)) / 100)

When the external system clock is used, the actual MIPI D-PHY data rate is the value of the following equation.

Maximum : DR ×((100 + maximum spread rate of SSCG(%)) / 100)

Minimum : DR × ((100 - maximum spread rate of SSCG(%)) / 100)

For Desay

PLL1 Setup - 5 : PLL1 setup 5 (bank3,0x47,RW)

This register controls the setting of PLL.

7	6	5	4	3	2	1	0
—	—	—	—	—	—	—	MIPI_TX1_CLK_FIXED_MODE_ENABLE_2
RW-0	RW-0	RW-0	RW-0	RW-0	RW-0	RW-0	RW-0

Bit0 : MIPI_TX1_CLK_FIXED_MODE_ENABLE_2

This bit enables or disables the setting of the clock fixed mode of MIPI output (Port 1).

When the clock regeneration mode is set by the MIPI_TX1_CLK_FIXED_MODE register, this bit should be set to " 0 ".

0: Disable
1: Enable

For Desay

PLL1 Setup - 3 : PLL1 setup 3 (bank3,0x49,RW)

This register controls the setting of PLL.

7	6	5	4	3	2	1	0
—	—	MIPI_TX1_CLK_FIXED_MODE_ENABLE_1	—	—	—	—	—
RW-0	RW-0	RW-0	RW-0	RW-0	RW-0	RW-0	RW-0

Bit5 : MIPI_TX1_CLK_FIXED_MODE_ENABLE_1

This bit enables or disables the setting of the clock fixed mode of MIPI output (Port 1).

When the clock regeneration mode is set by the MIPI_TX1_CLK_FIXED_MODE register, this bit should be set to " 0 ".

0: Disable
1: Enable

For Desay

PLL1 Setup - 4 : PLL1 setup 4 (bank3,0x4A,RW)

This register controls the setting of PLL.

7	6	5	4	3	2	1	0
—	—	—	—	MIPI_TX1_CLK_FIXED_MODE_FREQ_RANGE[3:0]			
RW-0	RW-0	RW-0	RW-0	RW-0	RW-0	RW-0	RW-0

Bit3-0 : MIPI_TX1_CLK_FIXED_MODE_FREQ_RANGE

These bits set the frequency range of MIPI output (Port 1) with the clock fixed mode.

DR: MIPI D-PHY data rate (Mbps / Lane)

0000: Reserved
0001: 3600 Mbps < DR ≤ 4500 Mbps
0010: 2850 Mbps < DR ≤ 3600 Mbps
0011: 2275 Mbps < DR ≤ 2850 Mbps
0100: 1800 Mbps < DR ≤ 2275 Mbps
0101: 1425 Mbps < DR ≤ 1800 Mbps
0110: 1137.5 Mbps < DR ≤ 1425 Mbps
0111: 900 Mbps < DR ≤ 1137.5 Mbps
1000: 712.5 Mbps < DR ≤ 900 Mbps
1001: 568.75 Mbps < DR ≤ 712.5 Mbps
1010: 450 Mbps < DR ≤ 568.75 Mbps
1011: 356.25 Mbps < DR ≤ 450 Mbps
1100: 284.375 Mbps < DR ≤ 356.25 Mbps
1101: 225 Mbps < DR ≤ 284.375 Mbps
1110: 178.125 Mbps < DR ≤ 225 Mbps
1111: DR ≤ 178.125 Mbps

For Desay

MIPI Transmitter 1_2 Setup - 1 : MIPI transmitter 1_2 setup 1 (bank3,0x4D,RW)

This register controls the setting of the MIPI transmitter.

7	6	5	4	3	2	1	0
—	—	MIPI_TX1_DATA_MODE[1:0]		MIPI_TX1_2_LANE_NUMBER[3:0]			
RW-0	RW-0	RW-0	RW-1	RW-0	RW-1	RW-0	RW-0

Bit5-4 : MIPI_TX1_DATA_MODE

This bit sets the assignment of the data lane of MIPI output (Port 1). Please refer to the description of functions and operation.

00: Data Mode 0
01: Data Mode 1
10: Reserved
11: Reserved

Bit3-0 : MIPI_TX1_2_LANE_NUMBER

These bits set the number of the used lanes of MIPI output (Port 1, Sub port 2).

The lanes are assigned from Channel 0 for the number of the used lanes.

0000 : Reserved
0001 : 1Lane
0010 : 2Lane
0011 : Reserved
0100 : 4Lane
0101-1111 : Reserved

For Desay

MIPI Transmitter 1_2 Setup - 2 : MIPI transmitter 1_2 setup 2 (bank3,0x4E,RW)

This register controls the setting of the MIPI transmitter.

7	6	5	4	3	2	1	0
MIPI_TX1_2_TLPX_DATA[7:0]							
RW-0	RW-0	RW-1	RW-0	RW-0	RW-0	RW-0	RW-0

Bit7-0 : MIPI_TX1_2_TLPX_DATA

These bits set the TLPX_DATA parameter of MIPI output (Port 1, Sub port 2).

For Desay

MIPI Transmitter 1_2 Setup - 3 : MIPI transmitter 1_2 setup 3 (bank3,0x4F,RW)

This register controls the setting of the MIPI transmitter.

7	6	5	4	3	2	1	0
MIPI_TX1_2_THS_PREPARE[7:0]							
RW-0	RW-0	RW-1	RW-0	RW-0	RW-0	RW-0	RW-0

Bit7-0 : MIPI_TX1_2_THS_PREPARE

These bits set the LSB 8 bits ([7:0]) of the THS_PREPARE parameter of MIPI output (Port 1, Sub port 2).

For Desay

MIPI Transmitter 1_2 Setup - 4 : MIPI transmitter 1_2 setup 4 (bank3,0x50,RW)

This register controls the setting of the MIPI transmitter.

7	6	5	4	3	2	1	0
—	—	—	—	MIPI_TX1_2_THS_TRAIL[9:8]		MIPI_TX1_2_THS_PREPARE[9:8]	
RW-0	RW-0	RW-0	RW-0	RW-0	RW-0	RW-0	RW-0

Bit3-2 : MIPI_TX1_2_THS_TRAIL

These bits set the MSB 2 bits ([9:8]) of the THS_TRAIL parameter of MIPI output (Port 1, Sub port 2).

Bit1-0 : MIPI_TX1_2_THS_PREPARE

These bits set the MSB 2 bits ([9:8]) of the THS_PREPARE parameter of MIPI output (Port 1, Sub port 2).

For Desay

MIPI Transmitter 1_2 Setup - 5 : MIPI transmitter 1_2 setup 5 (bank3,0x51,RW)

This register controls the setting of the MIPI transmitter.

7	6	5	4	3	2	1	0
MIPI_TX1_2_THS_ZERO[7:0]							
RW-0	RW-0	RW-1	RW-0	RW-0	RW-0	RW-0	RW-0

Bit7-0 : MIPI_TX1_2_THS_ZERO

These bits set the THS_ZERO parameter of MIPI output (Port 1, Sub port 2).

For Desay

MIPI Transmitter 1_2 Setup - 6 : MIPI transmitter 1_2 setup 6 (bank3,0x52,RW)

This register controls the setting of the MIPI transmitter.

7	6	5	4	3	2	1	0
MIPI_TX1_2_THS_TRAIL[7:0]							
RW-0	RW-0	RW-1	RW-0	RW-0	RW-0	RW-0	RW-0

Bit7-0 : MIPI_TX1_2_THS_TRAIL

These bits set the LSB 8 bits ([7:0]) of the THS_TRAIL parameter of MIPI output (Port 1, Sub port 2).

For Desay

MIPI Transmitter 1_2 Setup - 7 : MIPI transmitter 1_2 setup 7 (bank3,0x53,RW)

This register controls the setting of the MIPI transmitter.

7	6	5	4	3	2	1	0
MIPI_TX1_2_TLPX_CLK[7:0]							
RW-0	RW-0	RW-1	RW-0	RW-0	RW-0	RW-0	RW-0

Bit7-0 : MIPI_TX1_2_TLPX_CLK

These bits set the TLPX_CLK parameter of MIPI output (Port 1, Sub port 2).

For Desay

MIPI Transmitter 1_2 Setup - 8 : MIPI transmitter 1_2 setup 8 (bank3,0x54,RW)

This register controls the setting of the MIPI transmitter.

7	6	5	4	3	2	1	0
MIPI_TX1_2_TCLK_PREPARE1[7:0]							
RW-0	RW-0	RW-1	RW-0	RW-0	RW-0	RW-0	RW-0

Bit7-0 : MIPI_TX1_2_TCLK_PREPARE1

These bits set the LSB 8 bits ([7:0]) of the TCLK_PREPARE1 parameter of MIPI output (Port 1, Sub port 2).

For Desay

MIPI Transmitter 1_2 Setup - 9 : MIPI transmitter 1_2 setup 9 (bank3,0x55,RW)

This register controls the setting of the MIPI transmitter.

7	6	5	4	3	2	1	0
—	—	—	—	MIPI_TX1_2_TCLK_TRAIL[9:8]		MIPI_TX1_2_TCLK_PREPARE1[9:8]	
RW-0	RW-0	RW-0	RW-0	RW-0	RW-0	RW-0	RW-0

Bit3-2 : MIPI_TX1_2_TCLK_TRAIL

These bits set the MSB 2 bits ([9:8]) of the TCLK_TRAIL parameter of MIPI output (Port 1, Sub port 2).

Bit1-0 : MIPI_TX1_2_TCLK_PREPARE1

These bits set the MSB 2 bits ([9:8]) of the TCLK_PREPARE1 parameter of MIPI output (Port 1, Sub port 2).

For Desay

MIPI Transmitter 1_2 Setup - 10 : MIPI transmitter 1_2 setup 10 (bank3,0x56,RW)

This register controls the setting of the MIPI transmitter.

7	6	5	4	3	2	1	0
MIPI_TX1_2_THS_EXIT[7:0]							
RW-0	RW-0	RW-1	RW-0	RW-0	RW-0	RW-0	RW-0

Bit7-0 : MIPI_TX1_2_THS_EXIT

These bits set the THS_EXIT parameter of MIPI output (Port 1, Sub port 2).

For Desay

MIPI Transmitter 1_2 Setup - 11 : MIPI transmitter 1_2 setup 11 (bank3,0x57,RW)

This register controls the setting of the MIPI transmitter.

7	6	5	4	3	2	1	0
MIPI_TX1_2_TCLK_TRAIL[7:0]							
RW-0	RW-0	RW-1	RW-0	RW-0	RW-0	RW-0	RW-0

Bit7-0 : MIPI_TX1_2_TCLK_TRAIL

These bits set the LSB 8 bits ([7:0]) of the TCLK_TRAIL parameter of MIPI output (Port 1, Sub port 2).

For Desay

MIPI Transmitter 1_2 Setup - 12 : MIPI transmitter 1_2 setup 12 (bank3,0x58,RW)

This register controls the setting of the MIPI transmitter.

7	6	5	4	3	2	1	0
—	—	—	MIPI_TX1_2_SELECT	—	MIPI_TX1_CLK_MODE[2:0]		
RW-0	RW-0	RW-0	RW-0	RW-1	RW-0	RW-1	RW-0

Bit4 : MIPI_TX1_2_SELECT

This bit sets the assignment of MIPI signal for pins. (Sub port 2)

0: Not assign
1: Assign

Bit2-0 : MIPI_TX1_CLK_MODE

These bits set the assignment of the clock lane of MIPI output (Port 1). Please refer to the description of functions and operation.

000: Reserved
001: Clock Mode 1
010: Clock Mode 2
011-111 : Reserved

For Desay

MIPI Transmitter 1_2 Setup - 14 : MIPI transmitter 1_2 setup 14 (bank3,0x5A,RW)

This register controls the setting of the MIPI transmitter.

7	6	5	4	3	2	1	0
MIPI_TX1_2_TCLK_PREPARE2[7:0]							
RW-0	RW-0	RW-1	RW-0	RW-0	RW-0	RW-0	RW-0

Bit7-0 : MIPI_TX1_2_TCLK_PREPARE2

These bits set the TCLK_PREPARE2 parameter of MIPI output (Port 1, Sub port 2).

For Desay

MIPI Transmitter 1_2 Setup - 16 : MIPI transmitter 1_2 setup 16 (bank3,0x5D,RW)

This register controls the setting of the MIPI transmitter.

7	6	5	4	3	2	1	0
MIPI_TX1_2_UNLOADER_SELECT[7:0]							
RW-0	RW-0	RW-0	RW-0	RW-1	RW-1	RW-1	RW-1

Bit7-0 : MIPI_TX1_2_UNLOADER_SELECT

These bits set the module number of Unloader which is connected to sub port 2 of the video data output.

Each of the Unloaders can be connected to only one of sub ports.

The bit number indicates the module number of Unloader. The corresponding bits should be set to " 1 " to select the Unloaders.

Bit0: Unloader 0

Bit1: Unloader 1

Bit2: Unloader 2

Bit3: Unloader 3

Bit4: Unloader 4 (CXD4964ER-W and CXD4984ER-W only)

Bit5: Unloader 5 (CXD4964ER-W and CXD4984ER-W only)

Bit6: Unloader 6 (CXD4964ER-W and CXD4984ER-W only)

Bit7: Unloader 7 (CXD4964ER-W and CXD4984ER-W only)

For Desay

MIPI Transmitter 1_3 Setup - 1 : MIPI transmitter 1_3 setup 1 (bank3,0x5F,RW)

This register controls the setting of the MIPI transmitter.

7	6	5	4	3	2	1	0
—	—	—	—	MIPI_TX1_3_LANE_NUMBER[3:0]			
RW-0	RW-0	RW-0	RW-1	RW-0	RW-1	RW-0	RW-0

Bit3-0 : MIPI_TX1_3_LANE_NUMBER

These bits set the number of the used lanes of MIPI output (Port 1, Sub port 3).

The lanes are assigned from Channel 0 for the number of the used lanes.

0000 : Reserved
0001 : 1Lane
0010 : 2Lane
0011 : Reserved
0100 : 4Lane (This should be selected when the Sub port 3 is not used.)
0101-1111 : Reserved

For Desay

MIPI Transmitter 1_3 Setup - 2 : MIPI transmitter 1_3 setup 2 (bank3,0x60,RW)

This register controls the setting of the MIPI transmitter.

7	6	5	4	3	2	1	0
MIPI_TX1_3_TLPX_DATA[7:0]							
RW-0	RW-0	RW-1	RW-0	RW-0	RW-0	RW-0	RW-0

Bit7-0 : MIPI_TX1_3_TLPX_DATA

These bits set the TLPX_DATA parameter of MIPI output (Port 1, Sub port 3).

For Desay

MIPI Transmitter 1_3 Setup - 3 : MIPI transmitter 1_3 setup 3 (bank3,0x61,RW)

This register controls the setting of the MIPI transmitter.

7	6	5	4	3	2	1	0
MIPI_TX1_3_THS_PREPARE[7:0]							
RW-0	RW-0	RW-1	RW-0	RW-0	RW-0	RW-0	RW-0

Bit7-0 : MIPI_TX1_3_THS_PREPARE

These bits set the LSB 8 bits ([7:0]) of the THS_PREPARE parameter of MIPI output (Port 1, Sub port 3).

For Desay

MIPI Transmitter 1_3 Setup - 4 : MIPI transmitter 1_3 setup 4 (bank3,0x62,RW)

This register controls the setting of the MIPI transmitter.

7	6	5	4	3	2	1	0
MIPI_TX1_3_HALFRATE_MODE_ENABLE[3:0]				MIPI_TX1_3_THS_TRAIL[9:8]		MIPI_TX1_3_THS_PREPARE[9:8]	
RW-0	RW-0	RW-0	RW-0	RW-0	RW-0	RW-0	RW-0

Bit7-4 : MIPI_TX1_3_HALFRATE_MODE_ENABLE

These bits enable or disable the half rate mode of MIPI output (Port 1, Sub port 3).

0000: Disable
0001: Enable

Bit3-2 : MIPI_TX1_3_THS_TRAIL

These bits set the MSB 2 bits ([9:8]) of the THS_TRAIL parameter of MIPI output (Port 1, Sub port 3).

Bit1-0 : MIPI_TX1_3_THS_PREPARE

These bits set the MSB 2 bits ([9:8]) of the THS_PREPARE parameter of MIPI output (Port 1, Sub port 3).

For Desay

MIPI Transmitter 1_3 Setup - 5 : MIPI transmitter 1_3 setup 5 (bank3,0x63,RW)

This register controls the setting of the MIPI transmitter.

7	6	5	4	3	2	1	0
MIPI_TX1_3_THS_ZERO[7:0]							
RW-0	RW-0	RW-1	RW-0	RW-0	RW-0	RW-0	RW-0

Bit7-0 : MIPI_TX1_3_THS_ZERO

These bits set the THS_ZERO parameter of MIPI output (Port 1, Sub port 3).

For Desay

MIPI Transmitter 1_3 Setup - 6 : MIPI transmitter 1_3 setup 6 (bank3,0x64,RW)

This register controls the setting of the MIPI transmitter.

7	6	5	4	3	2	1	0
MIPI_TX1_3_THS_TRAIL[7:0]							
RW-0	RW-0	RW-1	RW-0	RW-0	RW-0	RW-0	RW-0

Bit7-0 : MIPI_TX1_3_THS_TRAIL

These bits set the LSB 8 bits ([7:0]) of the THS_TRAIL parameter of MIPI output (Port 1, Sub port 3).

For Desay

MIPI Transmitter 1_3 Setup - 7 : MIPI transmitter 1_3 setup 7 (bank3,0x65,RW)

This register controls the setting of the MIPI transmitter.

7	6	5	4	3	2	1	0
MIPI_TX1_3_TLPX_CLK[7:0]							
RW-0	RW-0	RW-1	RW-0	RW-0	RW-0	RW-0	RW-0

Bit7-0 : MIPI_TX1_3_TLPX_CLK

These bits set the TLPX_CLK parameter of MIPI output (Port 1, Sub port 3).

For Desay

MIPI Transmitter 1_3 Setup - 8 : MIPI transmitter 1_3 setup 8 (bank3,0x66,RW)

This register controls the setting of the MIPI transmitter.

7	6	5	4	3	2	1	0
MIPI_TX1_3_TCLK_PREPARE1[7:0]							
RW-0	RW-0	RW-1	RW-0	RW-0	RW-0	RW-0	RW-0

Bit7-0 : MIPI_TX1_3_TCLK_PREPARE1

These bits set the LSB 8 bits ([7:0]) of the TCLK_PREPARE1 parameter of MIPI output (Port 1, Sub port 3).

For Desay

MIPI Transmitter 1_3 Setup - 9 : MIPI transmitter 1_3 setup 9 (bank3,0x67,RW)

This register controls the setting of the MIPI transmitter.

7	6	5	4	3	2	1	0
—	—	—	—	MIPI_TX1_3_TCLK_TRAIL[9:8]		MIPI_TX1_3_TCLK_PREPARE1[9:8]	
RW-0	RW-0	RW-0	RW-0	RW-0	RW-0	RW-0	RW-0

Bit3-2 : MIPI_TX1_3_TCLK_TRAIL

These bits set the MSB 2 bits ([9:8]) of the TCLK_TRAIL parameter of MIPI output (Port 1, Sub port 3).

Bit1-0 : MIPI_TX1_3_TCLK_PREPARE1

These bits set the MSB 2 bits ([9:8]) of the TCLK_PREPARE1 parameter of MIPI output (Port 1, Sub port 3).

For Desay

MIPI Transmitter 1_3 Setup - 10 : MIPI transmitter 1_3 setup 10 (bank3,0x68,RW)

This register controls the setting of the MIPI transmitter.

7	6	5	4	3	2	1	0
MIPI_TX1_3_THS_EXIT[7:0]							
RW-0	RW-0	RW-1	RW-0	RW-0	RW-0	RW-0	RW-0

Bit7-0 : MIPI_TX1_3_THS_EXIT

These bits set the THS_EXIT parameter of MIPI output (Port 1, Sub port 3).

For Desay

MIPI Transmitter 1_3 Setup - 11 : MIPI transmitter 1_3 setup 11 (bank3,0x69,RW)

This register controls the setting of the MIPI transmitter.

7	6	5	4	3	2	1	0
MIPI_TX1_3_TCLK_TRAIL[7:0]							
RW-0	RW-0	RW-1	RW-0	RW-0	RW-0	RW-0	RW-0

Bit7-0 : MIPI_TX1_3_TCLK_TRAIL

These bits set the LSB 8 bits ([7:0]) of the TCLK_TRAIL parameter of MIPI output (Port 1, Sub port 3).

For Desay

MIPI Transmitter 1_3 Setup - 12 : MIPI transmitter 1_3 setup 12 (bank3,0x6A,RW)

This register controls the setting of the MIPI transmitter.

7	6	5	4	3	2	1	0
MIPI_TX1_MIRROR_MODE	—	—	MIPI_TX1_3_SELECT	—	—	—	—
RW-0	RW-0	RW-0	RW-0	RW-1	RW-1	RW-0	RW-0

Bit7 : MIPI_TX1_MIRROR_MODE

This bit enables or disables the mirroring between the Sub port 2 and Sub port 3 of MIPI output (Port 1). The Sub port 3 outputs the same data as Sub port 2.

0: Disable
1: Enable

Bit4 : MIPI_TX1_3_SELECT

This bit sets the assignment of MIPI signal for pins. (Sub port 3)

0: Not assign
1: Assign

For Desay

MIPI Transmitter 1_3 Setup - 14 : MIPI transmitter 1_3 setup 14 (bank3,0x6C,RW)

This register controls the setting of the MIPI transmitter.

7	6	5	4	3	2	1	0
MIPI_TX1_3_TCLK_PREPARE2[7:0]							
RW-0	RW-0	RW-1	RW-0	RW-0	RW-0	RW-0	RW-0

Bit7-0 : MIPI_TX1_3_TCLK_PREPARE2

These bits set the TCLK_PREPARE2 parameter of MIPI output (Port 1, Sub port 3).

For Desay

MIPI Transmitter 1_3 Setup - 16 : MIPI transmitter 1_3 setup 16 (bank3,0x6F,RW)

This register controls the setting of the MIPI transmitter.

7	6	5	4	3	2	1	0
MIPI_TX1_3_UNLOADER_SELECT[7:0]							
RW-0	RW-0	RW-0	RW-0	RW-1	RW-1	RW-1	RW-1

Bit7-0 : MIPI_TX1_3_UNLOADER_SELECT

These bits set the module number of Unloader which is connected to sub port 3 of the video data output.

Each of the Unloaders can be connected to only one of sub ports.

The bit number indicates the module number of Unloader. The corresponding bits should be set to " 1 " to select the Unloaders.

Bit0: Unloader 0

Bit1: Unloader 1

Bit2: Unloader 2

Bit3: Unloader 3

Bit4: Unloader 4 (CXD4964ER-W and CXD4984ER-W only)

Bit5: Unloader 5 (CXD4964ER-W and CXD4984ER-W only)

Bit6: Unloader 6 (CXD4964ER-W and CXD4984ER-W only)

Bit7: Unloader 7 (CXD4964ER-W and CXD4984ER-W only)

For Desay

GVIF3 receiver 2 Setup - 1 : GVIF3 receiver 2 setup 1 (bank3,0x71,RW)

This register controls the setting of GVIF3 receiver.

7	6	5	4	3	2	1	0
GVIF3RX2_POL_INVERT	—	—	—	—	GVIF3RX2_FAIL_MASK_INTERVAL_ENABLE	—	GVIF3RX2_ENABLE
RW-0	RW-0	RW-0	RW-0	RW-1	RW-0	RW-1	RW-1

Bit7 : GVIF3RX2_POL_INVERT

This bit sets the polarity of serial input / output pin of the GVIF3 receiver 2.

When a coaxial cable is used, this bit must be set to " 0 ".

0: Not invert (the same as the pin name)
1: Invert

Bit2 : GVIF3RX2_FAIL_MASK_INTERVAL_ENABLE

This bit enables or disables the error detection frequency setting of the GVIF3 receiver 2.

0: Disable
1: Enable

Bit0 : GVIF3RX2_ENABLE

This bit enables or disables the GVIF3 receiver 2.

0: Disable
1: Enable

For Desay

GVIF3 receiver 2 Setup - 5 : GVIF3 receiver 2 setup 5 (bank3,0x72,RW)

This register controls the setting of GVIF3 receiver.

7	6	5	4	3	2	1	0
—	—	—	—	GVIFID_GVIF3RX2_EXOR_OVR_ENABLE	—	—	—
RW-0	RW-0	RW-0	RW-0	RW-0	RW-0	RW-0	RW-0

Bit3 : GVIFID_GVIF3RX2_EXOR_OVR_ENABLE

This bit enables or disables the setting which convert the LSB 2 bits of GVIFID (video stream GVIFID) in serializer to the EXOR logical operated value between the LSB 2 bits of GVIFID (video stream GVIFID) in serializer and the 2 bits of the port number of GVIF3 receiver.

CXD4963GG-W or CXD4963ER-W or CXD4961ER-W should be connected to GVIF3 receiver by the point to point connection.

When this bit is set to " 1 ", the converted video stream GVIFID should be used to specify the video stream GVIFID after GVIF3 receiver.

0: Disable
1: Enable

For Desay

GVIF3 receiver 2 Setup - 2 : GVIF3 receiver 2 setup 2 (bank3,0x74,RW)

This register controls the setting of GVIF3 receiver.

7	6	5	4	3	2	1	0
—	—	—	GVIF3RX2_SPEED[4:0]				
RW-0	RW-0	RW-0	RW-0	RW-0	RW-0	RW-0	RW-0

Bit4-0 : GVIF3RX2_SPEED

These bits set the data rate of serial input (downstream) of the GVIF3 receiver 2. These bits should be set according to the data rate setting in the GVIF*TX*_SPEED register in GVIF device which is connected to the GVIF3 receiver 2.

When the downstream GVIF device changes these bits with the register remote access function, these bits should be set after the data rate setting of the GVIF*TX*_SPEED register in GVIF device which is connected to the GVIF3 receiver 2 is completed.

When the upstream GVIF device changes these bits with the register remote access function, these bits should be set before the data rate setting of the GVIF*TX*_SPEED register in GVIF device which is connected to the GVIF3 receiver 2 is completed.

00000: 2.4 Gbps, 3.6 Gbps, 4.8 Gbps
00001-10011: Reserved
10100: 6.0 Gbps
10101: 7.2 Gbps
10110: 8.4 Gbps
10111: 9.6 Gbps
11000: 10.8 Gbps
11001: 12.0 Gbps
11010-11111: Reserved

For Desay

GVIF3 receiver 2 Setup - 6 : GVIF3 receiver 2 setup 6 (bank3,0x77,RW)

This register controls the setting of GVIF3 receiver.

7	6	5	4	3	2	1	0
—	—	—	—	—	—	—	GVIF3RX2_FC_TEST_ENABLE
RW-0	RW-0	RW-0	RW-0	RW-0	RW-0	RW-0	RW-0

Bit0 : GVIF3RX2_FC_TEST_ENABLE

This bit enables or disables the downstream communication test of the GVIF3 receiver 2.

0: Disable
1: Enable

For Desay

GVIF3 Receiver 2 Monitor - 1 : GVIF3 receiver 2 monitor 1 (bank3,0x79,R)

This register indicates the status of GVIF3 receiver.

7	6	5	4	3	2	1	0
GVIF3RX2_FC_TEST_VMARGIN[7:0]							
R-0	R-0	R-0	R-0	R-0	R-0	R-0	R-0

Bit7-0 : GVIF3RX2_FC_TEST_VMARGIN

These bits indicate the value of VMARGIN parameter in the downstream communication test of the GVIF3 receiver 2.

For Desay

GVIF3 Receiver 2 Monitor - 2 : GVIF3 receiver 2 monitor 2 (bank3,0x7B,R)

This register indicates the status of GVIF3 receiver.

7	6	5	4	3	2	1	0
—	—	—	—	—	—	GVIF3RX2_FC_TEST_COMPLETE	GVIF3RX2_FC_TEST_ERROR
R-x	R-x	R-x	R-x	R-x	R-x	R-0	R-0

Bit1 : GVIF3RX2_FC_TEST_COMPLETE

This bit indicates the completion of the downstream communication test of the GVIF3 receiver 2.

0: Not completed
1: Complete

Bit0 : GVIF3RX2_FC_TEST_ERROR

This bit indicates the downstream communication test status of the GVIF3 receiver 2.

0: No error
1: Error

For Desay

GVIF3 receiver 3 Setup - 1 : GVIF3 receiver 3 setup 1 (bank3,0x80,RW)

This register controls the setting of GVIF3 receiver.

7	6	5	4	3	2	1	0
GVIF3RX3_POL_INVERT	—	—	—	—	GVIF3RX3_FAIL_MASK_INTERVAL_ENABLE	—	GVIF3RX3_ENABLE
RW-0	RW-0	RW-0	RW-0	RW-1	RW-0	RW-1	RW-1

Bit7 : GVIF3RX3_POL_INVERT

This bit sets the polarity of serial input / output pin of the GVIF3 receiver 3.

When a coaxial cable is used, this bit must be set to " 0 ".

0: Not invert (the same as the pin name)
1: Invert

Bit2 : GVIF3RX3_FAIL_MASK_INTERVAL_ENABLE

This bit enables or disables the error detection frequency setting of the GVIF3 receiver 3.

0: Disable
1: Enable

Bit0 : GVIF3RX3_ENABLE

This bit enables or disables the GVIF3 receiver 3.

0: Disable
1: Enable

For Desay

GVIF3 receiver 3 Setup - 5 : GVIF3 receiver 3 setup 5 (bank3,0x81,RW)

This register controls the setting of GVIF3 receiver.

7	6	5	4	3	2	1	0
—	—	—	—	GVIFID_GVIF3RX3_EXOR_OVR_ENABLE	—	—	—
RW-0	RW-0	RW-0	RW-0	RW-0	RW-0	RW-0	RW-0

Bit3 : GVIFID_GVIF3RX3_EXOR_OVR_ENABLE

This bit enables or disables the setting which convert the LSB 2 bits of GVIFID (video stream GVIFID) in serializer to the EXOR logical operated value between the LSB 2 bits of GVIFID (video stream GVIFID) in serializer and the 2 bits of the port number of GVIF3 receiver.

CXD4963GG-W or CXD4963ER-W or CXD4961ER-W should be connected to GVIF3 receiver by the point to point connection.

When this bit is set to " 1 ", the converted video stream GVIFID should be used to specify the video stream GVIFID after GVIF3 receiver.

0: Disable
1: Enable

For Desay

GVIF3 receiver 3 Setup - 2 : GVIF3 receiver 3 setup 2 (bank3,0x83,RW)

This register controls the setting of GVIF3 receiver.

7	6	5	4	3	2	1	0
—	—	—	GVIF3RX3_SPEED[4:0]				
RW-0	RW-0	RW-0	RW-0	RW-0	RW-0	RW-0	RW-0

Bit4-0 : GVIF3RX3_SPEED

These bits set the data rate of serial input (downstream) of the GVIF3 receiver 3. These bits should be set according to the data rate setting in the GVIF*TX*_SPEED register in GVIF device which is connected to the GVIF3 receiver 3.

When the downstream GVIF device changes these bits with the register remote access function, these bits should be set after the data rate setting of the GVIF*TX*_SPEED register in GVIF device which is connected to the GVIF3 receiver 3 is completed.

When the upstream GVIF device changes these bits with the register remote access function, these bits should be set before the data rate setting of the GVIF*TX*_SPEED register in GVIF device which is connected to the GVIF3 receiver 3 is completed.

00000: 2.4 Gbps, 3.6 Gbps, 4.8 Gbps
00001-10011: Reserved
10100: 6.0 Gbps
10101: 7.2 Gbps
10110: 8.4 Gbps
10111: 9.6 Gbps
11000: 10.8 Gbps
11001: 12.0 Gbps
11010-11111: Reserved

For Desay

GVIF3 receiver 3 Setup - 6 : GVIF3 receiver 3 setup 6 (bank3,0x86,RW)

This register controls the setting of GVIF3 receiver.

7	6	5	4	3	2	1	0
—	—	—	—	—	—	—	GVIF3RX3_FC_TEST_ENABLE
RW-0	RW-0	RW-0	RW-0	RW-0	RW-0	RW-0	RW-0

Bit0 : GVIF3RX3_FC_TEST_ENABLE

This bit enables or disables the downstream communication test of the GVIF3 receiver 3.

0: Disable
1: Enable

For Desay

GVIF3 Receiver 3 Monitor - 1 : GVIF3 receiver 3 monitor 1 (bank3,0x88,R)

This register indicates the status of GVIF3 receiver.

7	6	5	4	3	2	1	0
GVIF3RX3_FC_TEST_VMARGIN[7:0]							
R-0	R-0	R-0	R-0	R-0	R-0	R-0	R-0

Bit7-0 : GVIF3RX3_FC_TEST_VMARGIN

These bits indicate the value of VMARGIN parameter in the downstream communication test of the GVIF3 receiver 3.

For Desay

GVIF3 Receiver 3 Monitor - 2 : GVIF3 receiver 3 monitor 2 (bank3,0x8A,R)

This register indicates the status of GVIF3 receiver.

7	6	5	4	3	2	1	0
—	—	—	—	—	—	GVIF3RX3_FC_TEST_COMPLETE	GVIF3RX3_FC_TEST_ERROR
R-x	R-x	R-x	R-x	R-x	R-x	R-0	R-0

Bit1 : GVIF3RX3_FC_TEST_COMPLETE

This bit indicates the completion of the downstream communication test of the GVIF3 receiver 3.

0: Not completed
1: Complete

Bit0 : GVIF3RX3_FC_TEST_ERROR

This bit indicates the downstream communication test status of the GVIF3 receiver 3.

0: No error
1: Error

For Desay

GVIF3 Receiver 2 Setup - 4 : GVIF3 receiver 2 setup 4 (bank3,0x90,RW)

This register controls the setting of GVIF3 receiver.

7	6	5	4	3	2	1	0
GVIF3RX2_FAIL_MASK_INTERVAL[7:0]							
RW-0	RW-0	RW-0	RW-0	RW-0	RW-0	RW-0	RW-0

Bit7-0 : GVIF3RX2_FAIL_MASK_INTERVAL

These bits set the error detection frequency of the GVIV3 receiver 2.

The GVIF3RX2_FAIL_MASK_INTERVAL_ENABLE register need to be set.

The value equal to or greater than 1 should be set.

READY can be " 0 " during the error masked period.

The error masked period is (50 ns +/- 10 %) × 8 × GVIF3RX2_FAIL_MASK_INTERVAL.

For Desay

GVIF3 Receiver 3 Setup - 4 : GVIF3 receiver 3 setup 4 (bank3,0x91,RW)

This register controls the setting of GVIF3 receiver.

7	6	5	4	3	2	1	0
GVIF3RX3_FAIL_MASK_INTERVAL[7:0]							
RW-0	RW-0	RW-0	RW-0	RW-0	RW-0	RW-0	RW-0

Bit7-0 : GVIF3RX3_FAIL_MASK_INTERVAL

These bits set the error detection frequency of the GVIV3 receiver 3.

The GVIF3RX3_FAIL_MASK_INTERVAL_ENABLE register need to be set.

The value equal to or greater than 1 should be set.

READY can be " 0 " during the error masked period.

The error masked period is (50 ns +/- 10 %) × 8 × GVIF3RX3_FAIL_MASK_INTERVAL.

For Desay

MIPI Transmitter 1_2 Setup - 17 : MIPI transmitter 1_2 setup 17 (bank3,0x95,RW)

This register controls the setting of the MIPI transmitter.

7	6	5	4	3	2	1	0
—	—	—	—	MIPI_TX1_2_ALTERNATE_SKEW_CAL_ENABLE	MIPI_TX1_2_PREAMBLE_SKEW_CAL_ENABLE	MIPI_TX1_2_PERIODIC_SKEW_CAL_ENABLE	MIPI_TX1_2_INITIAL_SKEW_CAL_ENABLE
RW-0	RW-0	RW-0	RW-0	RW-0	RW-0	RW-0	RW-0

Bit3 : MIPI_TX1_2_ALTERNATE_SKEW_CAL_ENABLE

This bit enables or disables the Alternate Calibration Sequence of MIPI output (Port 1, Sub Port 2).

0: Disable
1: Enable

Bit2 : MIPI_TX1_2_PREAMBLE_SKEW_CAL_ENABLE

This bit enables or disables the Preamble Sequence of MIPI output (Port 1, Sub Port 2).

0: Disable
1: Enable

Bit1 : MIPI_TX1_2_PERIODIC_SKEW_CAL_ENABLE

This bit enables or disables the Periodic HS Skew Calibration Burst of MIPI output (Port 1, Sub Port 2).

0: Disable
1: Enable

Bit0 : MIPI_TX1_2_INITIAL_SKEW_CAL_ENABLE

This bit enables or disables the Initial HS Skew Calibration Burst of MIPI output (Port 1, Sub port 2).

0: Disable
1: Enable

For Desay

MIPI Transmitter 1_2 Setup - 18 : MIPI transmitter 1_2 setup 18 (bank3,0x96,RW)

This register controls the setting of the MIPI transmitter.

7	6	5	4	3	2	1	0
MIPI_TX1_2_INITIAL_SKEW_CAL_LENGTH[7:0]							
RW-0	RW-0	RW-1	RW-0	RW-0	RW-0	RW-0	RW-0

Bit7-0 : MIPI_TX1_2_INITIAL_SKEW_CAL_LENGTH

These bits set the calibration length of the Initial HS Skew Calibration Burst for MIPI output (Port 1, Sub port 2).

Calibration Length (UI) = MIPI_TX1_2_INITIAL_SKEW_CAL_LENGTH×4096 + 40

For Desay

MIPI Transmitter 1_2 Setup - 19 : MIPI transmitter 1_2 setup 19 (bank3,0x97,RW)

This register controls the setting of the MIPI transmitter.

7	6	5	4	3	2	1	0
MIPI_TX1_2_PERIODIC_SKEW_CAL_LENGTH[7:0]							
RW-0	RW-0	RW-1	RW-0	RW-0	RW-0	RW-0	RW-0

Bit7-0 : MIPI_TX1_2_PERIODIC_SKEW_CAL_LENGTH

These bits set the calibration length of the Periodic HS Skew Calibration Burst for MIPI output (Port 1, Sub port 2).

Calibration Length (UI) = MIPI_TX1_2_PERIODIC_SKEW_CAL_LENGTH×256 + 40

For Desay

MIPI Transmitter 1_2 Setup - 20 : MIPI transmitter 1_2 setup 20 (bank3,0x98,RW)

This register controls the setting of the MIPI transmitter.

7	6	5	4	3	2	1	0
—	—	MIPI_TX1_2_PREAMBLE_SKEW_CAL_LENGTH[5:0]					
RW-0	RW-0	RW-1	RW-0	RW-0	RW-0	RW-0	RW-0

Bit5-0 : MIPI_TX1_2_PREAMBLE_SKEW_CAL_LENGTH

These bits set the calibration length of the Preamble Sequence for MIPI output (Port 1, Sub port 2).

Calibration Length (UI) = MIPI_TX1_2_PREAMBLE_SKEW_CAL_LENGTH×64 + 32

For Desay

MIPI Transmitter 1_3 Setup - 17 : MIPI transmitter 1_3 setup 17 (bank3,0x99,RW)

This register controls the setting of the MIPI transmitter.

7	6	5	4	3	2	1	0
—	—	—	—	MIPI_TX1_3_ALTERNATE_SKEW_CAL_ENABLE	MIPI_TX1_3_PREAMBLE_SKEW_CAL_ENABLE	MIPI_TX1_3_PERIODIC_SKEW_CAL_ENABLE	MIPI_TX1_3_INITIAL_SKEW_CAL_ENABLE
RW-0	RW-0	RW-0	RW-0	RW-0	RW-0	RW-0	RW-0

Bit3 : MIPI_TX1_3_ALTERNATE_SKEW_CAL_ENABLE

This bit enables or disables the Alternate Calibration Sequence of MIPI output (Port 1, Sub Port 3).

0: Disable
1: Enable

Bit2 : MIPI_TX1_3_PREAMBLE_SKEW_CAL_ENABLE

This bit enables or disables the Preamble Sequence of MIPI output (Port 1, Sub Port 3).

0: Disable
1: Enable

Bit1 : MIPI_TX1_3_PERIODIC_SKEW_CAL_ENABLE

This bit enables or disables the Periodic HS Skew Calibration Burst of MIPI output (Port 1, Sub Port 3).

0: Disable
1: Enable

Bit0 : MIPI_TX1_3_INITIAL_SKEW_CAL_ENABLE

This bit enables or disables the Initial HS Skew Calibration Burst of MIPI output (Port 1, Sub port 3).

0: Disable
1: Enable

For Desay

MIPI Transmitter 1_3 Setup - 18 : MIPI transmitter 1_3 setup 18 (bank3,0x9A,RW)

This register controls the setting of the MIPI transmitter.

7	6	5	4	3	2	1	0
MIPI_TX1_3_INITIAL_SKEW_CAL_LENGTH[7:0]							
RW-0	RW-0	RW-1	RW-0	RW-0	RW-0	RW-0	RW-0

Bit7-0 : MIPI_TX1_3_INITIAL_SKEW_CAL_LENGTH

These bits set the calibration length of the Initial HS Skew Calibration Burst for MIPI output (Port 1, Sub port 3).

Calibration Length (UI) = MIPI_TX1_3_INITIAL_SKEW_CAL_LENGTH×4096 + 40

For Desay

MIPI Transmitter 1_3 Setup - 19 : MIPI transmitter 1_3 setup 19 (bank3,0x9B,RW)

This register controls the setting of the MIPI transmitter.

7	6	5	4	3	2	1	0
MIPI_TX1_3_PERIODIC_SKEW_CAL_LENGTH[7:0]							
RW-0	RW-0	RW-1	RW-0	RW-0	RW-0	RW-0	RW-0

Bit7-0 : MIPI_TX1_3_PERIODIC_SKEW_CAL_LENGTH

These bits set the calibration length of the Periodic HS Skew Calibration Burst for MIPI output (Port 1, Sub port 3).

Calibration Length (UI) = MIPI_TX1_3_PERIODIC_SKEW_CAL_LENGTH×256 + 40

For Desay

MIPI Transmitter 1_3 Setup - 20 : MIPI transmitter 1_3 setup 20 (bank3,0x9C,RW)

This register controls the setting of the MIPI transmitter.

7	6	5	4	3	2	1	0
—	—	MIPI_TX1_3_PREAMBLE_SKEW_CAL_LENGTH[5:0]					
RW-0	RW-0	RW-1	RW-0	RW-0	RW-0	RW-0	RW-0

Bit5-0 : MIPI_TX1_3_PREAMBLE_SKEW_CAL_LENGTH

These bits set the calibration length of the Preamble Sequence for MIPI output (Port 1, Sub port 3).

Calibration Length (UI) = MIPI_TX1_3_PREAMBLE_SKEW_CAL_LENGTH×64 + 32

For Desay

GVIF3 receiver 2 Setup - 7 : GVIF3 receiver 2 setup 7 (bank3,0x9D,RW)

This register controls the setting of GVIF3 receiver.

7	6	5	4	3	2	1	0
GVIF3RX2_DROP_SOURCE_DATA_GVIFID_0[7:0]							
RW-1	RW-1	RW-1	RW-1	RW-1	RW-1	RW-1	RW-1

Bit7-0 : GVIF3RX2_DROP_SOURCE_DATA_GVIFID_0

These bits set the GVIFID (video stream GVIFID) of received video data at the GVIF3 receiver 2 to be deleted from GVIF3 transmitter output to the downstream GVIF3 device.

Deleted video data is not transmitted to the downstream GVIF devices in the daisy chain.

For Desay

GVIF3 receiver 3 Setup - 7 : GVIF3 receiver 3 setup 7 (bank3,0x9E,RW)

This register controls the setting of GVIF3 receiver.

7	6	5	4	3	2	1	0
GVIF3RX3_DROP_SOURCE_DATA_GVIFID_0[7:0]							
RW-1	RW-1	RW-1	RW-1	RW-1	RW-1	RW-1	RW-1

Bit7-0 : GVIF3RX3_DROP_SOURCE_DATA_GVIFID_0

These bits set the GVIFID (video stream GVIFID) of received video data at the GVIF3 receiver 3 to be deleted from GVIF3 transmitter output to the downstream GVIF3 device.

Deleted video data is not transmitted to the downstream GVIF devices in the daisy chain.

For Desay

Unloader 4 Setup - 1 : Unloader 4 setup 1 (bank3,0xA7,RW)

This register controls the setting of the video data transmission.

7	6	5	4	3	2	1	0
UNLOADER4_GVIF3RX_PORT_SELECT[1:0]		—	—	UNLOADER4_ECC_CRC_OVR_ENABLE	UNLOADER4_VIDEO_MUTE	—	UNLOADER4_SELECT
RW-0	RW-0	RW-0	RW-1	RW-0	RW-0	RW-0	RW-1

Bit7-6 : UNLOADER4_GVIF3RX_PORT_SELECT

These bits set the port number of GVIF3 receiver to be connected to the Unloader 4.

Bit3 : UNLOADER4_ECC_CRC_OVR_ENABLE

This bit enables or disables the ECC/CRC recalculation of the input video data which is stored in the Unloader 4.

When the frame extended mode is enable in serializer and the mute in the Unloader 4 turns on, this bit must be set to " 1 " prior to setting the VIDEO_OUTPUT_ENABLE_* register to " 1 ".

0: Disable
1: Enable

Bit2 : UNLOADER4_VIDEO_MUTE

This bit sets the mute of the input video data which is stored in the Unloader 4.

When the mute turns on, the black screen is transmitted instead of the input video data.

0: Mute OFF
1: Mute ON

Bit0 : UNLOADER4_SELECT

This bit enables or disables the Unloader 4.

0: Disable
1: Enable

For Desay

Unloader 4 Setup - 2 : Unloader 4 setup 2 (bank3,0xA8,RW)

This register controls the setting of the video data transmission.

7	6	5	4	3	2	1	0
UNLOADER4_TARGET_GVIFID[7:0]							
RW-0	RW-0	RW-0	RW-0	RW-0	RW-0	RW-0	RW-0

Bit7-0 : UNLOADER4_TARGET_GVIFID

These bits set the GVIFID (video stream GVIFID) of the input video data to be stored in the Unloader 4.

For Desay

Unloader 4 Monitor - 1 : Unloader 4 monitor 1 (bank3,0xA9,R)

This register indicates the status of the video data transmission.

7	6	5	4	3	2	1	0
UNLOADER4_GVIF_FORMAT[7:0]							
R-0	R-0	R-0	R-0	R-0	R-0	R-0	R-0

Bit7-0 : UNLOADER4_GVIF_FORMAT

These bits indicate the GVIF Format of the input video data which was stored in the Unloader 4.

0000 0001: RGB888 (When the video input interface in serializer is except for MIPI D-PHY CSI-2.)
0000 0010: RGB888 (When the video input interface in serializer is MIPI D-PHY CSI-2.)
0000 1000: YCbCr422 (YUV)
0001 0001: RAW8
0001 0010: RAW10
0001 0011: RAW12
0001 0100: RAW16
0001 0101: RAW20
0001 0110: The frame extended mode
1111 1111: Default

Others: Reserved

For Desay

Unloader 4 Setup - 3 : Unloader 4 setup 3 (bank3,0xAB,RW)

This register controls the setting of the video data transmission.

7	6	5	4	3	2	1	0
UNLOADER4_MIPITX_VCID_SELECT_0[3:0]				UNLOADER4_MIPITX_VCID_SELECT_0_ENABLE	UNLOADER4_MIPITX_VCID_OVR_0_ENABLE	—	—
RW-0	RW-0	RW-0	RW-0	RW-0	RW-0	RW-0	RW-0

Bit7-4 : UNLOADER4_MIPITX_VCID_SELECT_0

These bits set the Virtual Channel ID of the video data to be output from the Unloader 4.

Bit3 : UNLOADER4_MIPITX_VCID_SELECT_0_ENABLE

This bit enables the output setting of Virtual Channel ID number which is set by the UNLOADER4_MIPITX_VCID_SELECT_0 register.

When this bit is not enabled, the received data of all Virtual Channel ID is output.

0: Disable the output setting of Virtual Channel ID
1: Enable the output setting of Virtual Channel ID

Bit2 : UNLOADER4_MIPITX_VCID_OVR_0_ENABLE

This bit enables or disables the override-setting of Virtual Channel ID number in the Unloader 4.

0: Disable
1: Enable

For Desay

Unloader 4 Setup - 4 : Unloader 4 setup 4 (bank3,0xAD,RW)

This register controls the setting of the video data transmission.

7	6	5	4	3	2	1	0
UNLOADER4_MIPITX_VCID_SELECT_1[3:0]				UNLOADER4_MIPITX_VCID_SELECT_1_ENABLE	—	—	—
RW-0	RW-0	RW-0	RW-0	RW-0	RW-0	RW-1	RW-1

Bit7-4 : UNLOADER4_MIPITX_VCID_SELECT_1

These bits set the Virtual Channel ID of the video data to be output from the Unloader 4.

Bit3 : UNLOADER4_MIPITX_VCID_SELECT_1_ENABLE

This bit enables the output setting of Virtual Channel ID number which is set by the UNLOADER4_MIPITX_VCID_SELECT_1 register.

When this bit is not enabled, the received data of all Virtual Channel ID is output.

0: Disable the output setting of Virtual Channel ID
1: Enable the output setting of Virtual Channel ID

For Desay

Unloader 5 Setup - 1 : Unloader 5 setup 1 (bank3,0xB0,RW)

This register controls the setting of the video data transmission.

7	6	5	4	3	2	1	0
UNLOADER5_GVIF3RX_PORT_SELECT[1:0]		—	—	UNLOADER5_ECC_CRC_OVR_ENABLE	UNLOADER5_VIDEO_MUTE	—	UNLOADER5_SELECT
RW-0	RW-0	RW-0	RW-1	RW-0	RW-0	RW-0	RW-1

Bit7-6 : UNLOADER5_GVIF3RX_PORT_SELECT

These bits set the port number of GVIF3 receiver to be connected to the Unloader 5.

Bit3 : UNLOADER5_ECC_CRC_OVR_ENABLE

This bit enables or disables the ECC/CRC recalculation of the input video data which is stored in the Unloader 5.

When the frame extended mode is enable in serializer and the mute in the Unloader 5 turns on, this bit must be set to " 1 " prior to setting the VIDEO_OUTPUT_ENABLE_* register to " 1 ".

0: Disable
1: Enable

Bit2 : UNLOADER5_VIDEO_MUTE

This bit sets the mute of the input video data which is stored in the Unloader 5.

When the mute turns on, the black screen is transmitted instead of the input video data.

0: Mute OFF
1: Mute ON

Bit0 : UNLOADER5_SELECT

This bit enables or disables the Unloader 5.

0: Disable
1: Enable

For Desay

Unloader 5 Setup - 2 : Unloader 5 setup 2 (bank3,0xB1,RW)

This register controls the setting of the video data transmission.

7	6	5	4	3	2	1	0
UNLOADER5_TARGET_GVIFID[7:0]							
RW-0	RW-0	RW-0	RW-0	RW-0	RW-0	RW-0	RW-0

Bit7-0 : UNLOADER5_TARGET_GVIFID

These bits set the GVIFID (video stream GVIFID) of the input video data to be stored in the Unloader 5.

For Desay

Unloader 5 Monitor - 1 : Unloader 5 monitor 1 (bank3,0xB2,R)

This register indicates the status of the video data transmission.

7	6	5	4	3	2	1	0
UNLOADER5_GVIF_FORMAT[7:0]							
R-0	R-0	R-0	R-0	R-0	R-0	R-0	R-0

Bit7-0 : UNLOADER5_GVIF_FORMAT

These bits indicate the GVIF Format of the input video data which was stored in the Unloader 5.

0000 0001: RGB888 (When the video input interface in serializer is except for MIPI D-PHY CSI-2.)
0000 0010: RGB888 (When the video input interface in serializer is MIPI D-PHY CSI-2.)
0000 1000: YCbCr422 (YUV)
0001 0001: RAW8
0001 0010: RAW10
0001 0011: RAW12
0001 0100: RAW16
0001 0101: RAW20
0001 0110: The frame extended mode
1111 1111: Default

Others: Reserved

For Desay

Unloader 5 Setup - 3 : Unloader 5 setup 3 (bank3,0xB4,RW)

This register controls the setting of the video data transmission.

7	6	5	4	3	2	1	0
UNLOADER5_MIPITX_VCID_SELECT_0[3:0]				UNLOADER5_MIPITX_VCID_SELECT_0_ENABLE	UNLOADER5_MIPITX_VCID_OVR_0_ENABLE	—	—
RW-0	RW-0	RW-0	RW-0	RW-0	RW-0	RW-0	RW-0

Bit7-4 : UNLOADER5_MIPITX_VCID_SELECT_0

These bits set the Virtual Channel ID of the video data to be output from the Unloader 5.

Bit3 : UNLOADER5_MIPITX_VCID_SELECT_0_ENABLE

This bit enables the output setting of Virtual Channel ID number which is set by the UNLOADER5_MIPITX_VCID_SELECT_0 register.

When this bit is not enabled, the received data of all Virtual Channel ID is output.

0: Disable the output setting of Virtual Channel ID
1: Enable the output setting of Virtual Channel ID

Bit2 : UNLOADER5_MIPITX_VCID_OVR_0_ENABLE

This bit enables or disables the override-setting of Virtual Channel ID number in the Unloader 5.

0: Disable
1: Enable

For Desay

Unloader 5 Setup - 4 : Unloader 5 setup 4 (bank3,0xB6,RW)

This register controls the setting of the video data transmission.

7	6	5	4	3	2	1	0
UNLOADER5_MIPITX_VCID_SELECT_1[3:0]				UNLOADER5_MIPITX_VCID_SELECT_1_ENABLE	—	—	—
RW-0	RW-0	RW-0	RW-0	RW-0	RW-0	RW-1	RW-1

Bit7-4 : UNLOADER5_MIPITX_VCID_SELECT_1

These bits set the Virtual Channel ID of the video data to be output from the Unloader 5.

Bit3 : UNLOADER5_MIPITX_VCID_SELECT_1_ENABLE

This bit enables the output setting of Virtual Channel ID number which is set by the UNLOADER5_MIPITX_VCID_SELECT_1 register.

When this bit is not enabled, the received data of all Virtual Channel ID is output.

0: Disable the output setting of Virtual Channel ID
1: Enable the output setting of Virtual Channel ID

For Desay

Unloader 6 Setup - 1 : Unloader 6 setup 1 (bank3,0xB9,RW)

This register controls the setting of the video data transmission.

7	6	5	4	3	2	1	0
UNLOADER6_GVIF3RX_PORT_SELECT[1:0]		—	—	UNLOADER6_ECC_CRC_OVR_ENABLE	UNLOADER6_VIDEO_MUTE	—	UNLOADER6_SELECT
RW-0	RW-0	RW-0	RW-1	RW-0	RW-0	RW-0	RW-1

Bit7-6 : UNLOADER6_GVIF3RX_PORT_SELECT

These bits set the port number of GVIF3 receiver to be connected to the Unloader 6.

Bit3 : UNLOADER6_ECC_CRC_OVR_ENABLE

This bit enables or disables the ECC/CRC recalculation of the input video data which is stored in the Unloader 6.

When the frame extended mode is enable in serializer and the mute in the Unloader 6 turns on, this bit must be set to " 1 " prior to setting the VIDEO_OUTPUT_ENABLE_* register to " 1 ".

0: Disable
1: Enable

Bit2 : UNLOADER6_VIDEO_MUTE

This bit sets the mute of the input video data which is stored in the Unloader 6.

When the mute turns on, the black screen is transmitted instead of the input video data.

0: Mute OFF
1: Mute ON

Bit0 : UNLOADER6_SELECT

This bit enables or disables the Unloader 6.

0: Disable
1: Enable

For Desay

Unloader 6 Setup - 2 : Unloader 6 setup 2 (bank3,0xBA,RW)

This register controls the setting of the video data transmission.

7	6	5	4	3	2	1	0
UNLOADER6_TARGET_GVIFID[7:0]							
RW-0	RW-0	RW-0	RW-0	RW-0	RW-0	RW-0	RW-0

Bit7-0 : UNLOADER6_TARGET_GVIFID

These bits set the GVIFID (video stream GVIFID) of the input video data to be stored in the Unloader 6.

For Desay

Unloader 6 Monitor - 1 : Unloader 6 monitor 1 (bank3,0xBB,R)

This register indicates the status of the video data transmission.

7	6	5	4	3	2	1	0
UNLOADER6_GVIF_FORMAT[7:0]							
R-0	R-0	R-0	R-0	R-0	R-0	R-0	R-0

Bit7-0 : UNLOADER6_GVIF_FORMAT

These bits indicate the GVIF Format of the input video data which was stored in the Unloader 6.

0000 0001: RGB888 (When the video input interface in serializer is except for MIPI D-PHY CSI-2.)
0000 0010: RGB888 (When the video input interface in serializer is MIPI D-PHY CSI-2.)
0000 1000: YCbCr422 (YUV)
0001 0001: RAW8
0001 0010: RAW10
0001 0011: RAW12
0001 0100: RAW16
0001 0101: RAW20
0001 0110: The frame extended mode
1111 1111: Default

Others: Reserved

For Desay

Unloader 6 Setup - 3 : Unloader 6 setup 3 (bank3,0xBD,RW)

This register controls the setting of the video data transmission.

7	6	5	4	3	2	1	0
UNLOADER6_MIPITX_VCID_SELECT_0[3:0]				UNLOADER6_MIPITX_VCID_SELECT_0_ENABLE	UNLOADER6_MIPITX_VCID_OVR_0_ENABLE	—	—
RW-0	RW-0	RW-0	RW-0	RW-0	RW-0	RW-0	RW-0

Bit7-4 : UNLOADER6_MIPITX_VCID_SELECT_0

These bits set the Virtual Channel ID of the video data to be output from the Unloader 6.

Bit3 : UNLOADER6_MIPITX_VCID_SELECT_0_ENABLE

This bit enables the output setting of Virtual Channel ID number which is set by the UNLOADER6_MIPITX_VCID_SELECT_0 register.

When this bit is not enabled, the received data of all Virtual Channel ID is output.

0: Disable the output setting of Virtual Channel ID
1: Enable the output setting of Virtual Channel ID

Bit2 : UNLOADER6_MIPITX_VCID_OVR_0_ENABLE

This bit enables or disables the override-setting of Virtual Channel ID number in the Unloader 6.

0: Disable
1: Enable

For Desay

Unloader 6 Setup - 4 : Unloader 6 setup 4 (bank3,0xBF,RW)

This register controls the setting of the video data transmission.

7	6	5	4	3	2	1	0
UNLOADER6_MIPITX_VCID_SELECT_1[3:0]				UNLOADER6_MIPITX_VCID_SELECT_1_ENABLE	—	—	—
RW-0	RW-0	RW-0	RW-0	RW-0	RW-0	RW-1	RW-1

Bit7-4 : UNLOADER6_MIPITX_VCID_SELECT_1

These bits set the Virtual Channel ID of the video data to be output from the Unloader 6.

Bit3 : UNLOADER6_MIPITX_VCID_SELECT_1_ENABLE

This bit enables the output setting of Virtual Channel ID number which is set by the UNLOADER6_MIPITX_VCID_SELECT_1 register.

When this bit is not enabled, the received data of all Virtual Channel ID is output.

0: Disable the output setting of Virtual Channel ID
1: Enable the output setting of Virtual Channel ID

For Desay

Unloader 7 Setup - 1 : Unloader 7 setup 1 (bank3,0xC2,RW)

This register controls the setting of the video data transmission.

7	6	5	4	3	2	1	0
UNLOADER7_GVIF3RX_PORT_SELECT[1:0]		—	—	UNLOADER7_ECC_CRC_OVR_ENABLE	UNLOADER7_VIDEO_MUTE	—	UNLOADER7_SELECT
RW-0	RW-0	RW-0	RW-1	RW-0	RW-0	RW-0	RW-1

Bit7-6 : UNLOADER7_GVIF3RX_PORT_SELECT

These bits set the port number of GVIF3 receiver to be connected to the Unloader 7.

Bit3 : UNLOADER7_ECC_CRC_OVR_ENABLE

This bit enables or disables the ECC/CRC recalculation of the input video data which is stored in the Unloader 7.

When the frame extended mode is enable in serializer and the mute in the Unloader 7 turns on, this bit must be set to " 1 " prior to setting the VIDEO_OUTPUT_ENABLE_* register to " 1 ".

0: Disable
1: Enable

Bit2 : UNLOADER7_VIDEO_MUTE

This bit sets the mute of the input video data which is stored in the Unloader 7.

When the mute turns on, the black screen is transmitted instead of the input video data.

0: Mute OFF
1: Mute ON

Bit0 : UNLOADER7_SELECT

This bit enables or disables the Unloader 7.

0: Disable
1: Enable

For Desay

Unloader 7 Setup - 2 : Unloader 7 setup 2 (bank3,0xC3,RW)

This register controls the setting of the video data transmission.

7	6	5	4	3	2	1	0
UNLOADER7_TARGET_GVIFID[7:0]							
RW-0	RW-0	RW-0	RW-0	RW-0	RW-0	RW-0	RW-0

Bit7-0 : UNLOADER7_TARGET_GVIFID

These bits set the GVIFID (video stream GVIFID) of the input video data to be stored in the Unloader 7.

For Desay

Unloader 7 Monitor - 1 : Unloader 7 monitor 1 (bank3,0xC4,R)

This register indicates the status of the video data transmission.

7	6	5	4	3	2	1	0
UNLOADER7_GVIF_FORMAT[7:0]							
R-0	R-0	R-0	R-0	R-0	R-0	R-0	R-0

Bit7-0 : UNLOADER7_GVIF_FORMAT

These bits indicate the GVIF Format of the input video data which was stored in the Unloader 7.

0000 0001: RGB888 (When the video input interface in serializer is except for MIPI D-PHY CSI-2.)
0000 0010: RGB888 (When the video input interface in serializer is MIPI D-PHY CSI-2.)
0000 1000: YCbCr422 (YUV)
0001 0001: RAW8
0001 0010: RAW10
0001 0011: RAW12
0001 0100: RAW16
0001 0101: RAW20
0001 0110: The frame extended mode
1111 1111: Default

Others: Reserved

For Desay

Unloader 7 Setup - 3 : Unloader 7 setup 3 (bank3,0xC6,RW)

This register controls the setting of the video data transmission.

7	6	5	4	3	2	1	0
UNLOADER7_MIPITX_VCID_SELECT_0[3:0]				UNLOADER7_MIPITX_VCID_SELECT_0_ENABLE	UNLOADER7_MIPITX_VCID_OVR_0_ENABLE	—	—
RW-0	RW-0	RW-0	RW-0	RW-0	RW-0	RW-0	RW-0

Bit7-4 : UNLOADER7_MIPITX_VCID_SELECT_0

These bits set the Virtual Channel ID of the video data to be output from the Unloader 7.

Bit3 : UNLOADER7_MIPITX_VCID_SELECT_0_ENABLE

This bit enables the output setting of Virtual Channel ID number which is set by the UNLOADER7_MIPITX_VCID_SELECT_0 register.

When this bit is not enabled, the received data of all Virtual Channel ID is output.

0: Disable the output setting of Virtual Channel ID
1: Enable the output setting of Virtual Channel ID

Bit2 : UNLOADER7_MIPITX_VCID_OVR_0_ENABLE

This bit enables or disables the override-setting of Virtual Channel ID number in the Unloader 7.

0: Disable
1: Enable

For Desay

Unloader 7 Setup - 4 : Unloader 7 setup 4 (bank3,0xC8,RW)

This register controls the setting of the video data transmission.

7	6	5	4	3	2	1	0
UNLOADER7_MIPITX_VCID_SELECT_1[3:0]				UNLOADER7_MIPITX_VCID_SELECT_1_ENABLE	—	—	—
RW-0	RW-0	RW-0	RW-0	RW-0	RW-0	RW-1	RW-1

Bit7-4 : UNLOADER7_MIPITX_VCID_SELECT_1

These bits set the Virtual Channel ID of the video data to be output from the Unloader 7.

Bit3 : UNLOADER7_MIPITX_VCID_SELECT_1_ENABLE

This bit enables the output setting of Virtual Channel ID number which is set by the UNLOADER7_MIPITX_VCID_SELECT_1 register.

When this bit is not enabled, the received data of all Virtual Channel ID is output.

0: Disable the output setting of Virtual Channel ID
1: Enable the output setting of Virtual Channel ID

For Desay

GVIF3 Receiver 2 Setup - 3 : GVIF3 receiver 2 setup 3 (bank3,0xCF,RW)

This register controls the setting of GVIF3 receiver.

7	6	5	4	3	2	1	0
—	—	—	—	—	—	—	GVIF3RX2_COAX_MODE
RW-0	RW-1	RW-0	RW-0	RW-0	RW-0	RW-0	RW-0

Bit0 : GVIF3RX2_COAX_MODE

These bits set the serial cable type which is used for the GVIF3 receiver 2.

When a coaxial cable is used, these bits must be set prior to setting other registers.

0: STP cable
1: COAX cable

For Desay

GVIF3 receiver 2 Setup - 9 : GVIF3 receiver 2 setup 9 (bank3,0xD4,RW)

This register controls the setting of GVIF3 receiver.

7	6	5	4	3	2	1	0
GVIF3RX2_EQ_MODE[7:0]							
RW-1	RW-1	RW-1	RW-1	RW-1	RW-0	RW-1	RW-1

Bit7-0 : GVIF3RX2_EQ_MODE

These bits set EQ parameter according to the serial cable type and data rate which is used for the GVIF3 receiver 2.

After these bits are changed, the GVIF3RX2_ENABLE register must be set to " 0 " and then it must be set to " 1 ".

0100 0000: STP cable, Intra/Inter-board differential connection, the GVIF3RX2_SPEED register setting 8.4 to 12.0 Gbps (Low Gain Mode. This setting lowers the maximum limit of equalizer gain.)
1010 1111: COAX cable, the GVIF3RX2_SPEED register setting 2.4 to 3.6 Gbps
1010 1101: COAX cable, the GVIF3RX2_SPEED register setting 4.8 to 7.2 Gbps
1101 1101: STP cable, the GVIF3RX2_SPEED register setting 8.4 to 9.6 Gbps
1111 1011: STP cable, Intra/Inter-board differential connection, the GVIF3RX2_SPEED register setting 2.4 to 7.2 Gbps (Default)

For Desay

GVIF3 Receiver 3 Setup - 3 : GVIF3 receiver 3 setup 3 (bank3,0xE4,RW)

This register controls the setting of GVIF3 receiver.

7	6	5	4	3	2	1	0
—	—	—	—	—	—	—	GVIF3RX3_COAX_MODE
RW-0	RW-1	RW-0	RW-0	RW-0	RW-0	RW-0	RW-0

Bit0 : GVIF3RX3_COAX_MODE

These bits set the serial cable type which is used for the GVIF3 receiver 3.

When a coaxial cable is used, these bits must be set prior to setting other registers.

0: STP cable
1: COAX cable

For Desay

GVIF3 receiver 3 Setup - 9 : GVIF3 receiver 3 setup 9 (bank3,0xE9,RW)

This register controls the setting of GVIF3 receiver.

7	6	5	4	3	2	1	0
GVIF3RX3_EQ_MODE[7:0]							
RW-1	RW-1	RW-1	RW-1	RW-1	RW-0	RW-1	RW-1

Bit7-0 : GVIF3RX3_EQ_MODE

These bits set EQ parameter according to the serial cable type and data rate which is used for the GVIF3 receiver 3.

After these bits are changed, the GVIF3RX3_ENABLE register must be set to " 0 " and then it must be set to " 1 ".

0100 0000: STP cable, Intra/Inter-board differential connection, the GVIF3RX3_SPEED register setting 8.4 to 12.0 Gbps (Low Gain Mode. This setting lowers the maximum limit of equalizer gain.)
1010 1111: COAX cable, the GVIF3RX3_SPEED register setting 2.4 to 3.6 Gbps
1010 1101: COAX cable, the GVIF3RX3_SPEED register setting 4.8 to 7.2 Gbps
1101 1101: STP cable, the GVIF3RX3_SPEED register setting 8.4 to 9.6 Gbps
1111 1011: STP cable, Intra/Inter-board differential connection, the GVIF3RX3_SPEED register setting 2.4 to 7.2 Gbps (Default)

For Desay

Aux1 Setup - 1 : Aux1 setup 1 (bank4,0x1A,RW)

This register controls the setting of the Aux data transmission.

7	6	5	4	3	2	1	0
AUX_1_I2C_SPEED_MODE[1:0]		—	—	—	—	—	AUX_1_I2C_ENABLE
RW-0	RW-0	RW-0	RW-0	RW-0	RW-0	RW-0	RW-0

Bit7-6 : AUX_1_I2C_SPEED_MODE

These bits set the data rate of the Aux data transmission (I2C) which is assigned for shared pins. (Port 1)

00: Standard-mode (Max. 100 kbps)
01: Fast-mode (Max. 400 kbps)
10: Fast-mode Plus (Max. 1 Mbps)
11: Reserved

Bit0 : AUX_1_I2C_ENABLE

This bit enables or disables the Aux data transmission (I2C) which is assigned for shared pins. (Port 1)

This bit must be set after the signal assignment (the Shared Pin Setup - * register) is set.

This bit must be set to " 1 " after setting other registers of the Aux1 Setup - * registers, and it must be set to " 0 " before changing other registers of the Aux1 Setup - * registers.

0: Disable
1: Enable

For Desay

Aux1 Setup - 6 : Aux1 setup 6 (bank4,0x1B,RW)

This register controls the setting of the Aux data transmission.

7	6	5	4	3	2	1	0
—	—	AUX_1_I2C_PSEUDO_SLAVE_DISABLE	AUX_1_I2C_PSEUDO_MASTER_DISABLE	—	—	—	—
RW-0	RW-0	RW-0	RW-0	RW-0	RW-0	RW-0	RW-0

Bit5 : AUX_1_I2C_PSEUDO_SLAVE_DISABLE

This bit disables or enables the pseudo slave of the Aux data transmission (I2C). (Port 1)

0: Enable
1: Disable

Bit4 : AUX_1_I2C_PSEUDO_MASTER_DISABLE

This bit disables or enables the pseudo master of the Aux data transmission (I2C). (Port 1)

0: Enable
1: Disable

For Desay

Aux1 Setup - 2 : Aux1 setup 2 (bank4,0x1C,RW)

This register controls the setting of the Aux data transmission.

7	6	5	4	3	2	1	0
AUX_1_I2C_TIMEOUT[7:0]							
RW-1	RW-1	RW-1	RW-1	RW-1	RW-1	RW-1	RW-1

Bit7-0 : AUX_1_I2C_TIMEOUT

These bits set the timeout time of the Aux data transmission (I2C) which is assigned for shared pins. (Port 1)

The value equal to or greater than 1 should be set.

The timeout time is AUX_I2C_TIMEOUT × (0.82 ms +/- 10 %).

For Desay

Aux1 Setup - 3 : Aux1 setup 3 (bank4,0x1F,RW)

This register controls the setting of the Aux data transmission.

7	6	5	4	3	2	1	0
AUX_1_I2C_ADDRESS_FLIP[6:0]							—
RW-0	RW-0	RW-0	RW-0	RW-0	RW-0	RW-0	RW-0

Bit7-1 : AUX_1_I2C_ADDRESS_FLIP

These bits set the bit invert for the received slave address in the pseudo master of the Aux data transmission (I2C) which is assigned for shared pins. (Port 1)

This is used for preventing the slave addresses from overlapping.

For Desay

Aux1 Setup - 5 : Aux1 setup 5 (bank4,0x23,RW)

This register controls the setting of the Aux data transmission.

7	6	5	4	3	2	1	0
—	—	AUX_1_GVIF3RX3_SELECT	AUX_1_GVIF3RX2_SELECT	AUX_1_GVIF3RX1_SELECT	AUX_1_GVIF3RX0_SELECT	—	—
RW-0	RW-0	RW-0	RW-0	RW-0	RW-0	RW-0	RW-0

Bit5 : AUX_1_GVIF3RX3_SELECT

These bits set the GVIF receiver 3 as the port for the Aux data transmission. (Port 1)

Only one of the AUX_1_GVIF3RX*_SELECT registers can be set. The GVIF3 receiver which is not set by the AUX_0_GVIF3RX*_SELECT registers should be set.

0: Not set
1: Set

Bit4 : AUX_1_GVIF3RX2_SELECT

These bits set the GVIF receiver 2 as the port for the Aux data transmission. (Port 1)

Only one of the AUX_1_GVIF3RX*_SELECT registers can be set. The GVIF3 receiver which is not set by the AUX_0_GVIF3RX*_SELECT registers should be set.

0: Not set
1: Set

Bit3 : AUX_1_GVIF3RX1_SELECT

These bits set the GVIF receiver 1 as the port for the Aux data transmission. (Port 1)

Only one of the AUX_1_GVIF3RX*_SELECT registers can be set. The GVIF3 receiver which is not set by the AUX_0_GVIF3RX*_SELECT registers should be set.

0: Not set
1: Set

Bit2 : AUX_1_GVIF3RX0_SELECT

These bits set the GVIF receiver 0 as the port for the Aux data transmission. (Port 1)

Only one of the AUX_1_GVIF3RX*_SELECT registers can be set. The GVIF3 receiver which is not set by the AUX_0_GVIF3RX*_SELECT registers should be set.

0: Not set
1: Set

For Desay

MIPI C-PHY Transmitter 0 Setup - 1 : MIPI C-PHY transmitter 0 setup 1 (bank10,0x00,RW)

This register controls the setting of the MIPI C-PHY transmitter.

7	6	5	4	3	2	1	0
—	—	—	—	—	MIPI_TX0_CPHY_MIRROR_MODE	MIPI_TX0_CPHY_DATA_MODE[1:0]	
RW-0	RW-0	RW-0	RW-0	RW-0	RW-0	RW-1	RW-0

Bit2 : MIPI_TX0_CPHY_MIRROR_MODE

This bit enables or disables the mirroring between the Sub port 0 and Sub port 1 of MIPI C-PHY output (Port 0). The Sub port 1 outputs the same data as Sub port 0.

0: Disable
1: Enable

The mirroring can be used when MIPI_TX0_CPHY_DATA_MODE is set to C-PHY Data Mode 1. The number of data transmission lanes can be set to 1 for C-PHY.

Bit1-0 : MIPI_TX0_CPHY_DATA_MODE

This bit sets the assignment of the data lane. Please refer to the description of functions and operation. (Port 0)

00 : Reserved
01 : Reserved
10 : C-PHY Data Mode 0
11 : C-PHY Data Mode 1

For Desay

MIPI C-PHY Transmitter 0 Setup - 2 : MIPI C-PHY transmitter 0 setup 2 (bank10,0x3E,RW)

This register controls the setting of the MIPI C-PHY transmitter.

7	6	5	4	3	2	1	0
MIPI_TX0_CPHY_T3_PREPARE[7:0]							
RW-0	RW-0	RW-0	RW-0	RW-0	RW-0	RW-0	RW-0

Bit7-0 : MIPI_TX0_CPHY_T3_PREPARE

These bits set the LSB 8 bits ([7:0]) of the t3-PREPARE parameter of MIPI C-PHY output (Port 0).

The parameter is (setting value + 1) x 7 [UI] period.

For Desay

MIPI C-PHY Transmitter 0 Setup - 3 : MIPI C-PHY transmitter 0 setup 3 (bank10,0x3F,RW)

This register controls the setting of the MIPI C-PHY transmitter.

7	6	5	4	3	2	1	0
—	—	—	—	—	MIPI_TX0_CPHY_T3_PREPARE[10:8]		
RW-0	RW-0	RW-0	RW-0	RW-0	RW-0	RW-0	RW-0

Bit2-0 : MIPI_TX0_CPHY_T3_PREPARE

These bits set the MSB 3 bits ([10:8]) of the t3-PREPARE parameter of MIPI C-PHY output (Port 0).

The parameter is (setting value + 1) x 7 [UI] period.

For Desay

MIPI C-PHY Transmitter 0 Setup - 4 : MIPI C-PHY transmitter 0 setup 4 (bank10,0x40,RW)

This register controls the setting of the MIPI C-PHY transmitter.

7	6	5	4	3	2	1	0
MIPI_TX0_CPHY_T3_PREBEGIN[7:0]							
RW-0	RW-0	RW-0	RW-0	RW-0	RW-0	RW-0	RW-0

Bit7-0 : MIPI_TX0_CPHY_T3_PREBEGIN

These bits set the LSB 8 bits ([7:0]) of the t3-PREBEGIN parameter of MIPI C-PHY output (Port 0).

The parameter is (setting value + 1) x 7 [UI] period.

For Desay

MIPI C-PHY Transmitter 0 Setup - 5 : MIPI C-PHY transmitter 0 setup 5 (bank10,0x41,RW)

This register controls the setting of the MIPI C-PHY transmitter.

7	6	5	4	3	2	1	0
—	—	—	—	—	MIPI_TX0_CPHY_T3_PREBEGIN [10:8]		
RW-0	RW-0	RW-0	RW-0	RW-0	RW-0	RW-0	RW-0

Bit2-0 : MIPI_TX0_CPHY_T3_PREBEGIN

These bits set the MSB 3 bits ([10:8]) of the t3-PREBEGIN parameter of MIPI C-PHY output (Port 0).

The parameter is (setting value + 1) x 7 [UI] period.

For Desay

MIPI C-PHY Transmitter 0 Setup - 6 : MIPI C-PHY transmitter 0 setup 6 (bank10,0x42,RW)

This register controls the setting of the MIPI C-PHY transmitter.

7	6	5	4	3	2	1	0
MIPI_TX0_CPHY_T3_POST[7:0]							
RW-0	RW-0	RW-0	RW-0	RW-0	RW-0	RW-0	RW-0

Bit7-0 : MIPI_TX0_CPHY_T3_POST

These bits set the LSB 8 bits ([7:0]) of the t3-POST parameter of MIPI C-PHY output (Port 0).

The parameter is (setting value + 1) x 7 [UI] period.

For Desay

MIPI C-PHY Transmitter 0 Setup - 7 : MIPI C-PHY transmitter 0 setup 7 (bank10,0x43,RW)

This register controls the setting of the MIPI C-PHY transmitter.

7	6	5	4	3	2	1	0
—	—	—	—	—	MIPI_TX0_CPHY_T3_POST[10:8]		
RW-0	RW-0	RW-0	RW-0	RW-0	RW-0	RW-0	RW-0

Bit2-0 : MIPI_TX0_CPHY_T3_POST

These bits set the MSB 3 bits ([10:8]) of the t3-POST parameter of MIPI C-PHY output (Port 0).

The parameter is (setting value + 1) x 7 [UI] period.

For Desay

MIPI C-PHY Transmitter 0 Setup - 8 : MIPI C-PHY transmitter 0 setup 8 (bank10,0x44,RW)

This register controls the setting of the MIPI C-PHY transmitter.

7	6	5	4	3	2	1	0
MIPI_TX0_CPHY_T3_HS_EXIT[7:0]							
RW-0	RW-0	RW-0	RW-0	RW-0	RW-0	RW-0	RW-0

Bit7-0 : MIPI_TX0_CPHY_T3_HS_EXIT

These bits set the LSB 8 bits ([7:0]) of the tHS-EXIT parameter of MIPI C-PHY output (Port 0).

The parameter is (setting value + 1) x 7 [UI] period.

For Desay

MIPI C-PHY Transmitter 0 Setup - 9 : MIPI C-PHY transmitter 0 setup 9 (bank10,0x45,RW)

This register controls the setting of the MIPI C-PHY transmitter.

7	6	5	4	3	2	1	0
—	—	—	—	—	MIPI_TX0_CPHY_T3_HS_EXIT[10:8]		
RW-0	RW-0	RW-0	RW-0	RW-0	RW-0	RW-0	RW-0

Bit2-0 : MIPI_TX0_CPHY_T3_HS_EXIT

These bits set the MSB 3 bits ([10:8]) of the tHS-EXIT parameter of MIPI C-PHY output (Port 0).

The parameter is (setting value + 1) x 7 [UI] period.

For Desay

MIPI C-PHY Transmitter 0 Setup - 10 : MIPI C-PHY transmitter 0 setup 10 (bank10,0x46,RW)

This register controls the setting of the MIPI C-PHY transmitter.

7	6	5	4	3	2	1	0
MIPI_TX0_CPHY_T3_LPX[7:0]							
RW-0	RW-0	RW-0	RW-0	RW-0	RW-0	RW-0	RW-0

Bit7-0 : MIPI_TX0_CPHY_T3_LPX

These bits set the LSB 8 bits ([7:0]) of the tLPX parameter of MIPI C-PHY output (Port 0).

The parameter is (setting value + 1) x 7 [UI] period.

For Desay

MIPI C-PHY Transmitter 0 Setup - 11 : MIPI C-PHY transmitter 0 setup 11 (bank10,0x47,RW)

This register controls the setting of the MIPI C-PHY transmitter.

7	6	5	4	3	2	1	0
—	—	—	—	—	MIPI_TX0_CPHY_T3_LPX[10:8]		
RW-0	RW-0	RW-0	RW-0	RW-0	RW-0	RW-0	RW-0

Bit2-0 : MIPI_TX0_CPHY_T3_LPX

These bits set the MSB 3 bits ([10:8]) of the tLPX parameter of MIPI C-PHY output (Port 0).

The parameter is (setting value + 1) x 7 [UI] period.

For Desay

MIPI C-PHY Transmitter 0 Setup - 12 : MIPI C-PHY transmitter 0 setup 12 (bank10,0x48,RW)

This register controls the setting of the MIPI C-PHY transmitter.

7	6	5	4	3	2	1	0
MIPI_TX0_CPHY_TWAKEUP[7:0]							
RW-1	RW-1	RW-1	RW-0	RW-1	RW-0	RW-0	RW-0

Bit7-0 : MIPI_TX0_CPHY_TWAKEUP

These bits set the LSB 8 bits ([7:0]) of the Twakeup parameter of MIPI C-PHY output (Port 0). For 1 ms, "0100 0001 1010" (TBD) should be set.

For Desay

MIPI C-PHY Transmitter 0 Setup - 13 : MIPI C-PHY transmitter 0 setup 13 (bank10,0x49,RW)

This register controls the setting of the MIPI C-PHY transmitter.

7	6	5	4	3	2	1	0
—	—	—	—	MIPI_TX0_CPHY_TWAKEUP[11:8]			
RW-0	RW-0	RW-0	RW-0	RW-0	RW-0	RW-1	RW-1

Bit3-0 : MIPI_TX0_CPHY_TWAKEUP

These bits set the MSB 4 bits ([11:8]) of the Twakeup parameter of MIPI C-PHY output (Port 0). For 1 ms, "0100 0001 1010" (TBD) should be set.

For Desay

MIPI C-PHY Transmitter 0 Setup - 14 : MIPI C-PHY transmitter 0 setup 14 (bank10,0x4A,RW)

This register controls the setting of the MIPI C-PHY transmitter.

7	6	5	4	3	2	1	0
MIPI_TX0_CPHY_TINIT[7:0]							
RW-0	RW-1	RW-1	RW-0	RW-0	RW-1	RW-0	RW-0

Bit7-0 : MIPI_TX0_CPHY_TINIT

These bits set the LSB 8 bits ([7:0]) of the TINIT parameter of MIPI C-PHY output (Port 0). For 100 us, "00 0110 1001" (TBD) should be set.

For Desay

MIPI C-PHY Transmitter 0 Setup - 15 : MIPI C-PHY transmitter 0 setup 15 (bank10,0x4B,RW)

This register controls the setting of the MIPI C-PHY transmitter.

7	6	5	4	3	2	1	0
—	—	—	—	—	—	MIPI_TX0_CPHY_TINIT[9:8]	
RW-0	RW-0	RW-0	RW-0	RW-0	RW-0	RW-0	RW-0

Bit1-0 : MIPI_TX0_CPHY_TINIT

These bits set the MSB 2 bits ([9:8]) of the TINIT parameter of MIPI C-PHY output (Port 0). For 100 us, "00 0110 1001" (TBD) should be set.

For Desay

MIPI C-PHY Transmitter 0 Setup - 17 : MIPI C-PHY transmitter 0 setup 17 (bank10,0x4D,RW)

This register controls the setting of the MIPI C-PHY transmitter.

7	6	5	4	3	2	1	0
—	—	MIPI_TX0_CPHY_STB_MODE[1:0]		—	—	—	—
RW-0	RW-0	RW-0	RW-0	RW-0	RW-0	RW-0	RW-0

Bit5-4 : MIPI_TX0_CPHY_STB_MODE

These bits set ULPS entry setting in standby mode. "10" should be set.

00 : Reserved
01 : Reserved
10 : No ULPS entry for all lanes
11 : Reserved

For Desay

MIPI C-PHY Transmitter 0 Setup - 20 : MIPI C-PHY transmitter 0 setup 20 (bank10,0x53,RW)

This register controls the setting of the MIPI C-PHY transmitter.

7	6	5	4	3	2	1	0
—	—	—	—	—	—	MIPI_TX0_0_CPHY_CSI_LANE_NUMBER [1:0]	
RW-0	RW-0	RW-0	RW-0	RW-0	RW-0	RW-1	RW-0

Bit1-0 : MIPI_TX0_0_CPHY_CSI_LANE_NUMBER

These bits set the number of the used MIPI C-PHY output data lanes (Sub port 0).

"00" or "01" should be set for C-PHY Data Mode 1.

00 : 1 lane
01 : 2 lane
10 : 3 lane
11 : Reserved

For Desay

MIPI C-PHY Transmitter 0 Setup - 21 : MIPI C-PHY transmitter 0 setup 21 (bank10,0x54,RW)

This register controls the setting of the MIPI C-PHY transmitter.

7	6	5	4	3	2	1	0
—	—	—	—	—	—	MIPI_TX0_1_CPHY_CSI_LANE_NUMBER [1:0]	
RW-0	RW-0	RW-0	RW-0	RW-0	RW-0	RW-1	RW-0

Bit1-0 : MIPI_TX0_1_CPHY_CSI_LANE_NUMBER

These bits set the number of the used MIPI C-PHY output data lanes (Sub port 1).

"00" should be set for C-PHY Data Mode 1.

00 : 1 lane
01 : 2 lane
10 : Reserved
11 : Reserved

For Desay

MIPI C-PHY Transmitter 0 Setup - 23 : MIPI C-PHY transmitter 0 setup 23 (bank10,0x83,RW)

This register controls the setting of the MIPI C-PHY transmitter.

7	6	5	4	3	2	1	0
—	—	MIPI_TX0_0_CPHY_CALPREAMBLE_FMT_SELECT[1:0]		—	—	—	MIPI_TX0_0_CPHY_CALPREAMBLE_ENABLE
RW-0	RW-0	RW-0	RW-0	RW-0	RW-0	RW-0	RW-0

Bit5-4 : MIPI_TX0_0_CPHY_CALPREAMBLE_FMT_SELECT

These bits set the MIPI C-PHY Calibration Preamble Format (Sub port 0).

00 : Format 1
01 : Format 2
10 : Format 3
11 : Reserved

Bit0 : MIPI_TX0_0_CPHY_CALPREAMBLE_ENABLE

This bit enables or disables MIPI C-PHY Calibration Preamble transmission (Sub port 0).

0 : Disable
1 : Enable

For Desay

MIPI C-PHY Transmitter 0 Setup - 24 : MIPI C-PHY transmitter 0 setup 24 (bank10,0x84,RW)

This register controls the setting of the MIPI C-PHY transmitter.

7	6	5	4	3	2	1	0
—	—	MIPI_TX0_1_CPHY_CALPREAMBLE_FMT_SELECT[1:0]		—	—	—	MIPI_TX0_1_CPHY_CALPREAMBLE_ENABLE
RW-0	RW-0	RW-0	RW-0	RW-0	RW-0	RW-0	RW-0

Bit5-4 : MIPI_TX0_1_CPHY_CALPREAMBLE_FMT_SELECT

These bits set the MIPI C-PHY Calibration Preamble Format (Sub port 1).

00 : Format 1
01 : Format 2
10 : Format 3
11 : Reserved

Bit0 : MIPI_TX0_1_CPHY_CALPREAMBLE_ENABLE

This bit enables or disables MIPI C-PHY Calibration Preamble transmission (Sub port 1).

0 : Disable
1 : Enable

For Desay

MIPI C-PHY Transmitter 0 Setup - 25 : MIPI C-PHY transmitter 0 setup 25 (bank10,0x85,RW)

This register controls the setting of the MIPI C-PHY transmitter.

7	6	5	4	3	2	1	0
MIPI_TX0_0_CPHY_T3_CALPREAMBLE[7:0]							
RW-0	RW-0	RW-1	RW-0	RW-1	RW-0	RW-0	RW-1

Bit7-0 : MIPI_TX0_0_CPHY_T3_CALPREAMBLE

These bits set the LSB 8 bits ([7:0]) of the trasnsmission period (t3-CALPREAMBLE_TX) of MIPI C-PHY Calibration Preamble (Sub port 0).

The period is (setting value + 1) x 7 [UI].

For Desay

MIPI C-PHY Transmitter 0 Setup - 26 : MIPI C-PHY transmitter 0 setup 26 (bank10,0x86,RW)

This register controls the setting of the MIPI C-PHY transmitter.

7	6	5	4	3	2	1	0
—	—	—	—	—	MIPI_TX0_0_CPHY_T3_CALPREAMBLE[10:8]		
RW-0	RW-0	RW-0	RW-0	RW-0	RW-0	RW-0	RW-0

Bit2-0 : MIPI_TX0_0_CPHY_T3_CALPREAMBLE

These bits set the MSB 3 bits ([10:8]) of the trasnsmission period (t3-CALPREAMBLE_TX) of MIPI C-PHY Calibration Preamble (Sub port 0).

The period is (setting value + 1) x 7 [UI].

For Desay

MIPI C-PHY Transmitter 0 Setup - 27 : MIPI C-PHY transmitter 0 setup 27 (bank10,0x87,RW)

This register controls the setting of the MIPI C-PHY transmitter.

7	6	5	4	3	2	1	0
MIPI_TX0_1_CPHY_T3_CALPREAMBLE[7:0]							
RW-0	RW-0	RW-1	RW-0	RW-1	RW-0	RW-0	RW-1

Bit7-0 : MIPI_TX0_1_CPHY_T3_CALPREAMBLE

These bits set the LSB 8 bits ([7:0]) of the trasnsmission period (t3-CALPREAMBLE_TX) of MIPI C-PHY Calibration Preamble (Sub port 1).

The period is (setting value + 1) x 7 [UI].

For Desay

MIPI C-PHY Transmitter 0 Setup - 28 : MIPI C-PHY transmitter 0 setup 28 (bank10,0x88,RW)

This register controls the setting of the MIPI C-PHY transmitter.

7	6	5	4	3	2	1	0
—	—	—	—	—	MIPI_TX0_1_CPHY_T3_CALPREAMBLE[10:8]		
RW-0	RW-0	RW-0	RW-0	RW-0	RW-0	RW-0	RW-0

Bit2-0 : MIPI_TX0_1_CPHY_T3_CALPREAMBLE

These bits set the MSB 3 bits ([10:8]) of the trasnsmission period (t3-CALPREAMBLE_TX) of MIPI C-PHY Calibration Preamble (Sub port 1).

The period is (setting value + 1) x 7 [UI].

For Desay

MIPI C-PHY Transmitter 0 Setup - 29 : MIPI C-PHY transmitter 0 setup 29 (bank10,0x89,RW)

This register controls the setting of the MIPI C-PHY transmitter.

7	6	5	4	3	2	1	0
MIPI_TX0_0_CPHY_T3_CALALTSEQ[7:0]							
RW-0	RW-0	RW-0	RW-0	RW-0	RW-0	RW-1	RW-1

Bit7-0 : MIPI_TX0_0_CPHY_T3_CALALTSEQ

These bits set the LSB 8 bits ([7:0]) of the alternate sequence trasnsmission period (t3-CALALTSEQ_TX) of C-PHY Calibration Preamble format 2 (Sub port 0).

The period is (setting value + 1) x 7 [UI].

For Desay

MIPI C-PHY Transmitter 0 Setup - 30 : MIPI C-PHY transmitter 0 setup 30 (bank10,0x8A,RW)

This register controls the setting of the MIPI C-PHY transmitter.

7	6	5	4	3	2	1	0
—	—	—	—	—	MIPI_TX0_0_CPHY_T3_CALALTSEQ[10:8]		
RW-0	RW-0	RW-0	RW-0	RW-0	RW-0	RW-0	RW-0

Bit2-0 : MIPI_TX0_0_CPHY_T3_CALALTSEQ

These bits set the MSB 3 bits ([10:8]) of the alternate sequence trasnsmission period (t3-CALALTSEQ_TX) of C-PHY Calibration Preamble format 2 (Sub port 0).

The period is (setting value + 1) x 7 [UI].

For Desay

MIPI C-PHY Transmitter 0 Setup - 31 : MIPI C-PHY transmitter 0 setup 31 (bank10,0x8B,RW)

This register controls the setting of the MIPI C-PHY transmitter.

7	6	5	4	3	2	1	0
MIPI_TX0_1_CPHY_T3_CALALTSEQ[7:0]							
RW-0	RW-0	RW-0	RW-0	RW-0	RW-0	RW-1	RW-1

Bit7-0 : MIPI_TX0_1_CPHY_T3_CALALTSEQ

These bits set the LSB 8 bits ([7:0]) of the alternate sequence trasnsmission period (t3-CALALTSEQ_TX) of MIPI C-PHY Calibration Preamble Format 2 (Sub port 1).

The period is (setting value + 1) x 7 [UI].

For Desay

MIPI C-PHY Transmitter 0 Setup - 32 : MIPI C-PHY transmitter 0 setup 32 (bank10,0x8C,RW)

This register controls the setting of the MIPI C-PHY transmitter.

7	6	5	4	3	2	1	0
—	—	—	—	—	MIPI_TX0_1_CPHY_T3_CALALTSEQ[10:8]		
RW-0	RW-0	RW-0	RW-0	RW-0	RW-0	RW-0	RW-0

Bit2-0 : MIPI_TX0_1_CPHY_T3_CALALTSEQ

These bits set the MSB 3 bits ([10:8]) of the alternate sequence trasnsmission period (t3-CALALTSEQ_TX) of MIPI C-PHY Calibration Preamble Format 2 (Sub port 1).

The period is (setting value + 1) x 7 [UI].

For Desay

MIPI C-PHY Transmitter 0 Setup - 33 : MIPI C-PHY transmitter 0 setup 33 (bank10,0x8D,RW)

This register controls the setting of the MIPI C-PHY transmitter.

7	6	5	4	3	2	1	0
MIPI_TX0_0_CPHY_T3_CALUDEFSEQ[7:0]							
RW-0	RW-0	RW-0	RW-0	RW-0	RW-0	RW-1	RW-1

Bit7-0 : MIPI_TX0_0_CPHY_T3_CALUDEFSEQ

These bits set the LSB 8 bits ([7:0]) of the user-defined sequence trasnsmission period (t3-CALUDEFSEQ_TX) of MIPI C-PHY Calibration Preamble Format 3 (Sub port 0).

The period is (setting value + 1) x 7 [UI].

For Desay

MIPI C-PHY Transmitter 0 Setup - 34 : MIPI C-PHY transmitter 0 setup 34 (bank10,0x8E,RW)

This register controls the setting of the MIPI C-PHY transmitter.

7	6	5	4	3	2	1	0
—	—	—	—	—	MIPI_TX0_0_CPHY_T3_CALUDEFSEQ[10:8]		
RW-0	RW-0	RW-0	RW-0	RW-0	RW-0	RW-0	RW-0

Bit2-0 : MIPI_TX0_0_CPHY_T3_CALUDEFSEQ

These bits set the MSB 3 bits ([10:8]) of the user-defined sequence trasnsmission period (t3-CALUDEFSEQ_TX) of MIPI C-PHY Calibration Preamble Format 3 (Sub port 0).

The period is (setting value + 1) x 7 [UI].

For Desay

MIPI C-PHY Transmitter 0 Setup - 35 : MIPI C-PHY transmitter 0 setup 35 (bank10,0x8F,RW)

This register controls the setting of the MIPI C-PHY transmitter.

7	6	5	4	3	2	1	0
MIPI_TX0_1_CPHY_T3_CALUDEFSEQ[7:0]							
RW-0	RW-0	RW-0	RW-0	RW-0	RW-0	RW-1	RW-1

Bit7-0 : MIPI_TX0_1_CPHY_T3_CALUDEFSEQ

These bits set the LSB 8 bits ([7:0]) of the user-defined sequence trasnsmission period (t3-CALUDEFSEQ_TX) of MIPI C-PHY Calibration Preamble Format 3 (Sub port 1).

The period is (setting value + 1) x 7 [UI].

For Desay

MIPI C-PHY Transmitter 0 Setup - 36 : MIPI C-PHY transmitter 0 setup 36 (bank10,0x90,RW)

This register controls the setting of the MIPI C-PHY transmitter.

7	6	5	4	3	2	1	0
—	—	—	—	—	MIPI_TX0_1_CPHY_T3_CALUDEFSEQ[10:8]		
RW-0	RW-0	RW-0	RW-0	RW-0	RW-0	RW-0	RW-0

Bit2-0 : MIPI_TX0_1_CPHY_T3_CALUDEFSEQ

These bits set the MSB 3 bits ([10:8]) of the user-defined sequence trasnsmission period (t3-CALUDEFSEQ_TX) of MIPI C-PHY Calibration Preamble Format 3 (Sub port 1).

The period is (setting value + 1) x 7 [UI].

For Desay

MIPI C-PHY Transmitter 0 Setup - 37 : MIPI C-PHY transmitter 0 setup 37 (bank10,0x91,RW)

This register controls the setting of the MIPI C-PHY transmitter.

7	6	5	4	3	2	1	0
MIPI_TX0_CPHY_CALPRBS_SEED_DL1[7:0]							
RW-0	RW-0	RW-0	RW-0	RW-0	RW-0	RW-0	RW-1

Bit7-0 : MIPI_TX0_CPHY_CALPRBS_SEED_DL1

These bits set the LSB 8 bits ([7:0]) of the seed value of PRBS9 pattern for the MIPI C-PHY Calibration Preamble Format 2 on Data Lane 1.

Setting "0 000 0000" to [8:0] is prohibited.

For Desay

MIPI C-PHY Transmitter 0 Setup - 38 : MIPI C-PHY transmitter 0 setup 38 (bank10,0x92,RW)

This register controls the setting of the MIPI C-PHY transmitter.

7	6	5	4	3	2	1	0
MIPI_TX0_CPHY_CALPRBS_SEED_DL1[15:8]							
RW-0	RW-0	RW-0	RW-0	RW-0	RW-0	RW-0	RW-0

Bit7-0 : MIPI_TX0_CPHY_CALPRBS_SEED_DL1

These bits set the MSB 8 bits ([15:8]) of the seed value of PRBS9 pattern for the MIPI C-PHY Calibration Preamble Format 2 on Data Lane 1.

Setting "0 000 0000" to [8:0] is prohibited.

For Desay

MIPI C-PHY Transmitter 0 Setup - 39 : MIPI C-PHY transmitter 0 setup 39 (bank10,0x93,RW)

This register controls the setting of the MIPI C-PHY transmitter.

7	6	5	4	3	2	1	0
MIPI_TX0_CPHY_CALPRBS_SEED_DL2[7:0]							
RW-0	RW-0	RW-0	RW-0	RW-0	RW-0	RW-0	RW-1

Bit7-0 : MIPI_TX0_CPHY_CALPRBS_SEED_DL2

These bits set the LSB 8 bits ([7:0]) of the seed value of PRBS9 pattern for the MIPI C-PHY Calibration Preamble Format 2 on Data Lane 2.

Setting "0 000 0000" to [8:0] is prohibited.

For Desay

MIPI C-PHY Transmitter 0 Setup - 40 : MIPI C-PHY transmitter 0 setup 40 (bank10,0x94,RW)

This register controls the setting of the MIPI C-PHY transmitter.

7	6	5	4	3	2	1	0
MIPI_TX0_CPHY_CALPRBS_SEED_DL2[15:8]							
RW-0	RW-0	RW-0	RW-0	RW-0	RW-0	RW-0	RW-0

Bit7-0 : MIPI_TX0_CPHY_CALPRBS_SEED_DL2

These bits set the MSB 8 bits ([15:8]) of the seed value of PRBS9 pattern for the MIPI C-PHY Calibration Preamble Format 2 on Data Lane 2.

Setting "0 000 0000" to [8:0] is prohibited.

For Desay

MIPI C-PHY Transmitter 0 Setup - 41 : MIPI C-PHY transmitter 0 setup 41 (bank10,0x95,RW)

This register controls the setting of the MIPI C-PHY transmitter.

7	6	5	4	3	2	1	0
MIPI_TX0_CPHY_CALPRBS_SEED_DL3[7:0]							
RW-0	RW-0	RW-0	RW-0	RW-0	RW-0	RW-0	RW-1

Bit7-0 : MIPI_TX0_CPHY_CALPRBS_SEED_DL3

These bits set the LSB 8 bits ([7:0]) of the seed value of PRBS9 pattern for the MIPI C-PHY Calibration Preamble Format 2 on Data Lane 3.

Setting "0 000 0000" to [8:0] is prohibited.

For Desay

MIPI C-PHY Transmitter 0 Setup - 42 : MIPI C-PHY transmitter 0 setup 42 (bank10,0x96,RW)

This register controls the setting of the MIPI C-PHY transmitter.

7	6	5	4	3	2	1	0
MIPI_TX0_CPHY_CALPRBS_SEED_DL3[15:8]							
RW-0	RW-0	RW-0	RW-0	RW-0	RW-0	RW-0	RW-0

Bit7-0 : MIPI_TX0_CPHY_CALPRBS_SEED_DL3

These bits set the MSB 8 bits ([15:8]) of the seed value of PRBS9 pattern for the MIPI C-PHY Calibration Preamble Format 2 on Data Lane 3.

Setting "0 000 0000" to [8:0] is prohibited.

For Desay

MIPI C-PHY Transmitter 0 Setup - 43 : MIPI C-PHY transmitter 0 setup 43 (bank10,0x97,RW)

This register controls the setting of the MIPI C-PHY transmitter.

7	6	5	4	3	2	1	0
—	MIPI_TX0_0_CPHY_CALUDEFSEQ_01[2:0]			—	MIPI_TX0_0_CPHY_CALUDEFSEQ_00[2:0]		
RW-0	RW-0	RW-0	RW-0	RW-0	RW-0	RW-0	RW-0

Bit6-4 : MIPI_TX0_0_CPHY_CALUDEFSEQ_01

These bits set the value of symbol 1 of user-defined sequence of MIPI C-PHY calibration preamble format 3 (Sub port 0).

Setting of 0x5 to 0x7 is prohibitted.

Bit2-0 : MIPI_TX0_0_CPHY_CALUDEFSEQ_00

These bits set the value of symbol 0 of user-defined sequence of MIPI C-PHY calibration preamble format 3 (Sub port 0).

Setting of 0x5 to 0x7 is prohibitted.

For Desay

MIPI C-PHY Transmitter 0 Setup - 44 : MIPI C-PHY transmitter 0 setup 44 (bank10,0x98,RW)

This register controls the setting of the MIPI C-PHY transmitter.

7	6	5	4	3	2	1	0
—	MIPI_TX0_0_CPHY_CALUDEFSEQ_03[2:0]			—	MIPI_TX0_0_CPHY_CALUDEFSEQ_02[2:0]		
RW-0	RW-0	RW-0	RW-0	RW-0	RW-0	RW-0	RW-0

Bit6-4 : MIPI_TX0_0_CPHY_CALUDEFSEQ_03

These bits set the value of symbol 3 of user-defined sequence of MIPI C-PHY calibration preamble format 3 (Sub port 0).

Setting of 0x5 to 0x7 is prohibitted.

Bit2-0 : MIPI_TX0_0_CPHY_CALUDEFSEQ_02

These bits set the value of symbol 2 of user-defined sequence of MIPI C-PHY calibration preamble format 3 (Sub port 0).

Setting of 0x5 to 0x7 is prohibitted.

For Desay

MIPI C-PHY Transmitter 0 Setup - 45 : MIPI C-PHY transmitter 0 setup 45 (bank10,0x99,RW)

This register controls the setting of the MIPI C-PHY transmitter.

7	6	5	4	3	2	1	0
—	MIPI_TX0_0_CPHY_CALUDEFSEQ_05[2:0]			—	MIPI_TX0_0_CPHY_CALUDEFSEQ_04[2:0]		
RW-0	RW-0	RW-0	RW-0	RW-0	RW-0	RW-0	RW-0

Bit6-4 : MIPI_TX0_0_CPHY_CALUDEFSEQ_05

These bits set the value of symbol 5 of user-defined sequence of MIPI C-PHY calibration preamble format 3 (Sub port 0).

Setting of 0x5 to 0x7 is prohibitted.

Bit2-0 : MIPI_TX0_0_CPHY_CALUDEFSEQ_04

These bits set the value of symbol 4 of user-defined sequence of MIPI C-PHY calibration preamble format 3 (Sub port 0).

Setting of 0x5 to 0x7 is prohibitted.

For Desay

MIPI C-PHY Transmitter 0 Setup - 46 : MIPI C-PHY transmitter 0 setup 46 (bank10,0x9A,RW)

This register controls the setting of the MIPI C-PHY transmitter.

7	6	5	4	3	2	1	0
—	MIPI_TX0_0_CPHY_CALUDEFSEQ_07[2:0]			—	MIPI_TX0_0_CPHY_CALUDEFSEQ_06[2:0]		
RW-0	RW-0	RW-0	RW-0	RW-0	RW-0	RW-0	RW-0

Bit6-4 : MIPI_TX0_0_CPHY_CALUDEFSEQ_07

These bits set the value of symbol 7 of user-defined sequence of MIPI C-PHY calibration preamble format 3 (Sub port 0).

Setting of 0x5 to 0x7 is prohibitted.

Bit2-0 : MIPI_TX0_0_CPHY_CALUDEFSEQ_06

These bits set the value of symbol 6 of user-defined sequence of MIPI C-PHY calibration preamble format 3 (Sub port 0).

Setting of 0x5 to 0x7 is prohibitted.

For Desay

MIPI C-PHY Transmitter 0 Setup - 47 : MIPI C-PHY transmitter 0 setup 47 (bank10,0x9B,RW)

This register controls the setting of the MIPI C-PHY transmitter.

7	6	5	4	3	2	1	0
—	MIPI_TX0_0_CPHY_CALUDEFSEQ_09[2:0]			—	MIPI_TX0_0_CPHY_CALUDEFSEQ_08[2:0]		
RW-0	RW-0	RW-0	RW-0	RW-0	RW-0	RW-0	RW-0

Bit6-4 : MIPI_TX0_0_CPHY_CALUDEFSEQ_09

These bits set the value of symbol 9 of user-defined sequence of MIPI C-PHY calibration preamble format 3 (Sub port 0).

Setting of 0x5 to 0x7 is prohibitted.

Bit2-0 : MIPI_TX0_0_CPHY_CALUDEFSEQ_08

These bits set the value of symbol 8 of user-defined sequence of MIPI C-PHY calibration preamble format 3 (Sub port 0).

Setting of 0x5 to 0x7 is prohibitted.

For Desay

MIPI C-PHY Transmitter 0 Setup - 48 : MIPI C-PHY transmitter 0 setup 48 (bank10,0x9C,RW)

This register controls the setting of the MIPI C-PHY transmitter.

7	6	5	4	3	2	1	0
—	MIPI_TX0_0_CPHY_CALUDEFSEQ_11[2:0]			—	MIPI_TX0_0_CPHY_CALUDEFSEQ_10[2:0]		
RW-0	RW-0	RW-0	RW-0	RW-0	RW-0	RW-0	RW-0

Bit6-4 : MIPI_TX0_0_CPHY_CALUDEFSEQ_11

These bits set the value of symbol 11 of user-defined sequence of MIPI C-PHY calibration preamble format 3 (Sub port 0).

Setting of 0x5 to 0x7 is prohibitted.

Bit2-0 : MIPI_TX0_0_CPHY_CALUDEFSEQ_10

These bits set the value of symbol 10 of user-defined sequence of MIPI C-PHY calibration preamble format 3 (Sub port 0).

Setting of 0x5 to 0x7 is prohibitted.

For Desay

MIPI C-PHY Transmitter 0 Setup - 49 : MIPI C-PHY transmitter 0 setup 49 (bank10,0x9D,RW)

This register controls the setting of the MIPI C-PHY transmitter.

7	6	5	4	3	2	1	0
—	MIPI_TX0_0_CPHY_CALUDEFSEQ_13[2:0]			—	MIPI_TX0_0_CPHY_CALUDEFSEQ_12[2:0]		
RW-0	RW-0	RW-0	RW-0	RW-0	RW-0	RW-0	RW-0

Bit6-4 : MIPI_TX0_0_CPHY_CALUDEFSEQ_13

These bits set the value of symbol 13 of user-defined sequence of MIPI C-PHY calibration preamble format 3 (Sub port 0).

Setting of 0x5 to 0x7 is prohibitted.

Bit2-0 : MIPI_TX0_0_CPHY_CALUDEFSEQ_12

These bits set the value of symbol 12 of user-defined sequence of MIPI C-PHY calibration preamble format 3 (Sub port 0).

Setting of 0x5 to 0x7 is prohibitted.

For Desay

MIPI C-PHY Transmitter 0 Setup - 50 : MIPI C-PHY transmitter 0 setup 50 (bank10,0x9E,RW)

This register controls the setting of the MIPI C-PHY transmitter.

7	6	5	4	3	2	1	0
—	MIPI_TX0_1_CPHY_CALUDEFSEQ_01[2:0]			—	MIPI_TX0_1_CPHY_CALUDEFSEQ_00[2:0]		
RW-0	RW-0	RW-0	RW-0	RW-0	RW-0	RW-0	RW-0

Bit6-4 : MIPI_TX0_1_CPHY_CALUDEFSEQ_01

These bits set the value of symbol 1 of user-defined sequence of MIPI C-PHY calibration preamble format 3 (Sub port 1).

Setting of 0x5 to 0x7 is prohibitted.

Bit2-0 : MIPI_TX0_1_CPHY_CALUDEFSEQ_00

These bits set the value of symbol 0 of user-defined sequence of MIPI C-PHY calibration preamble format 3 (Sub port 1).

Setting of 0x5 to 0x7 is prohibitted.

For Desay

MIPI C-PHY Transmitter 0 Setup - 51 : MIPI C-PHY transmitter 0 setup 51 (bank10,0x9F,RW)

This register controls the setting of the MIPI C-PHY transmitter.

7	6	5	4	3	2	1	0
—	MIPI_TX0_1_CPHY_CALUDEFSEQ_03[2:0]			—	MIPI_TX0_1_CPHY_CALUDEFSEQ_02[2:0]		
RW-0	RW-0	RW-0	RW-0	RW-0	RW-0	RW-0	RW-0

Bit6-4 : MIPI_TX0_1_CPHY_CALUDEFSEQ_03

These bits set the value of symbol 3 of user-defined sequence of MIPI C-PHY calibration preamble format 3 (Sub port 1).

Setting of 0x5 to 0x7 is prohibitted.

Bit2-0 : MIPI_TX0_1_CPHY_CALUDEFSEQ_02

These bits set the value of symbol 2 of user-defined sequence of MIPI C-PHY calibration preamble format 3 (Sub port 1).

Setting of 0x5 to 0x7 is prohibitted.

For Desay

MIPI C-PHY Transmitter 0 Setup - 52 : MIPI C-PHY transmitter 0 setup 52 (bank10,0xA0,RW)

This register controls the setting of the MIPI C-PHY transmitter.

7	6	5	4	3	2	1	0
—	MIPI_TX0_1_CPHY_CALUDEFSEQ_05[2:0]			—	MIPI_TX0_1_CPHY_CALUDEFSEQ_04[2:0]		
RW-0	RW-0	RW-0	RW-0	RW-0	RW-0	RW-0	RW-0

Bit6-4 : MIPI_TX0_1_CPHY_CALUDEFSEQ_05

These bits set the value of symbol 5 of user-defined sequence of MIPI C-PHY calibration preamble format 3 (Sub port 1).

Setting of 0x5 to 0x7 is prohibitted.

Bit2-0 : MIPI_TX0_1_CPHY_CALUDEFSEQ_04

These bits set the value of symbol 4 of user-defined sequence of MIPI C-PHY calibration preamble format 3 (Sub port 1).

Setting of 0x5 to 0x7 is prohibitted.

For Desay

MIPI C-PHY Transmitter 0 Setup - 53 : MIPI C-PHY transmitter 0 setup 53 (bank10,0xA1,RW)

This register controls the setting of the MIPI C-PHY transmitter.

7	6	5	4	3	2	1	0
—	MIPI_TX0_1_CPHY_CALUDEFSEQ_07[2:0]			—	MIPI_TX0_1_CPHY_CALUDEFSEQ_06[2:0]		
RW-0	RW-0	RW-0	RW-0	RW-0	RW-0	RW-0	RW-0

Bit6-4 : MIPI_TX0_1_CPHY_CALUDEFSEQ_07

These bits set the value of symbol 7 of user-defined sequence of MIPI C-PHY calibration preamble format 3 (Sub port 1).

Setting of 0x5 to 0x7 is prohibitted.

Bit2-0 : MIPI_TX0_1_CPHY_CALUDEFSEQ_06

These bits set the value of symbol 6 of user-defined sequence of MIPI C-PHY calibration preamble format 3 (Sub port 1).

Setting of 0x5 to 0x7 is prohibitted.

For Desay

MIPI C-PHY Transmitter 0 Setup - 54 : MIPI C-PHY transmitter 0 setup 54 (bank10,0xA2,RW)

This register controls the setting of the MIPI C-PHY transmitter.

7	6	5	4	3	2	1	0
—	MIPI_TX0_1_CPHY_CALUDEFSEQ_09[2:0]			—	MIPI_TX0_1_CPHY_CALUDEFSEQ_08[2:0]		
RW-0	RW-0	RW-0	RW-0	RW-0	RW-0	RW-0	RW-0

Bit6-4 : MIPI_TX0_1_CPHY_CALUDEFSEQ_09

These bits set the value of symbol 9 of user-defined sequence of MIPI C-PHY calibration preamble format 3 (Sub port 1).

Setting of 0x5 to 0x7 is prohibitted.

Bit2-0 : MIPI_TX0_1_CPHY_CALUDEFSEQ_08

These bits set the value of symbol 8 of user-defined sequence of MIPI C-PHY calibration preamble format 3 (Sub port 1).

Setting of 0x5 to 0x7 is prohibitted.

For Desay

MIPI C-PHY Transmitter 0 Setup - 55 : MIPI C-PHY transmitter 0 setup 55 (bank10,0xA3,RW)

This register controls the setting of the MIPI C-PHY transmitter.

7	6	5	4	3	2	1	0
—	MIPI_TX0_1_CPHY_CALUDEFSEQ_11[2:0]			—	MIPI_TX0_1_CPHY_CALUDEFSEQ_10[2:0]		
RW-0	RW-0	RW-0	RW-0	RW-0	RW-0	RW-0	RW-0

Bit6-4 : MIPI_TX0_1_CPHY_CALUDEFSEQ_11

These bits set the value of symbol 11 of user-defined sequence of MIPI C-PHY calibration preamble format 3 (Sub port 1).

Setting of 0x5 to 0x7 is prohibitted.

Bit2-0 : MIPI_TX0_1_CPHY_CALUDEFSEQ_10

These bits set the value of symbol 10 of user-defined sequence of MIPI C-PHY calibration preamble format 3 (Sub port 1).

Setting of 0x5 to 0x7 is prohibitted.

For Desay

MIPI C-PHY Transmitter 0 Setup - 56 : MIPI C-PHY transmitter 0 setup 56 (bank10,0xA4,RW)

This register controls the setting of the MIPI C-PHY transmitter.

7	6	5	4	3	2	1	0
—	MIPI_TX0_1_CPHY_CALUDEFSEQ_13[2:0]			—	MIPI_TX0_1_CPHY_CALUDEFSEQ_12[2:0]		
RW-0	RW-0	RW-0	RW-0	RW-0	RW-0	RW-0	RW-0

Bit6-4 : MIPI_TX0_1_CPHY_CALUDEFSEQ_13

These bits set the value of symbol 13 of user-defined sequence of MIPI C-PHY calibration preamble format 3 (Sub port 1).

Setting of 0x5 to 0x7 is prohibitted.

Bit2-0 : MIPI_TX0_1_CPHY_CALUDEFSEQ_12

These bits set the value of symbol 12 of user-defined sequence of MIPI C-PHY calibration preamble format 3 (Sub port 1).

Setting of 0x5 to 0x7 is prohibitted.

For Desay

MIPI C-PHY Transmitter 0 Setup - 60 : MIPI C-PHY transmitter 0 setup 60 (bank10,0xA9,RW)

This register controls the setting of the MIPI C-PHY transmitter.

7	6	5	4	3	2	1	0
—	—	MIPI_TX0_CPHY_DATA_LANE3_ENABLE	MIPI_TX0_CPHY_DATA_LANE2_ENABLE	—	—	—	—
RW-0	RW-0	RW-1	RW-1	RW-0	RW-1	RW-0	RW-1

Bit5 : MIPI_TX0_CPHY_DATA_LANE3_ENABLE

This bit enables or disables MIPI C-PHY Data Lane 3 (Sub port 0).

If the number of the used lanes of sub port 0 is 2 or less, "0" should be set.

0 : Disable
1 : Enable

Bit4 : MIPI_TX0_CPHY_DATA_LANE2_ENABLE

This bit enables or disables MIPI C-PHY Data Lane 2 (Sub port 0).

If the number of the used lanes of sub port 0 is 1 or less, "0" should be set.

0 : Disable
1 : Enable

For Desay

MIPI C-PHY Transmitter 0 Setup - 65 : MIPI C-PHY transmitter 0 setup 65 (bank10,0xDF,RW)

This register controls the setting of the MIPI C-PHY transmitter.

7	6	5	4	3	2	1	0
—	—	MIPI_TX0_CPHY_PARAMETER1[5:0]					
RW-0	RW-0	RW-0	RW-0	RW-0	RW-0	RW-0	RW-0

Bit5-0 : MIPI_TX0_CPHY_PARAMETER1

This bit sets the parameter of the MIPI C-PHY transmitter (Port 0).

This bit should be set to " 001000 ".

For Desay

MIPI C-PHY Transmitter 0 Setup - 68 : MIPI C-PHY transmitter 0 setup 68 (bank10,0xE6,RW)

This register controls the setting of the MIPI C-PHY transmitter.

7	6	5	4	3	2	1	0
—	—	—	—	—	MIPI_TX0_CPHY_PARAMETER1[2:0]		
RW-0	RW-0	RW-0	RW-0	RW-0	RW-0	RW-0	RW-0

Bit2-0 : MIPI_TX0_CPHY_PARAMETER1

This bit sets the parameter of the MIPI C-PHY transmitter (Port 0).

This bit should be set to " 001 ".

For Desay

MIPI C-PHY Transmitter 0 Setup - 71 : MIPI C-PHY transmitter 0 setup 71 (bank10,0xEA,RW)

This register controls the setting of the MIPI C-PHY transmitter.

7	6	5	4	3	2	1	0
—	MIPI_TX0_CPHY_PARAMETER2[2:0]			—	MIPI_TX0_CPHY_PARAMETER3[2:0]		
RW-0	RW-0	RW-0	RW-0	RW-0	RW-0	RW-0	RW-0

Bit6-4 : MIPI_TX0_CPHY_PARAMETER2

This bit sets the parameter of the MIPI C-PHY transmitter (Port 0).

This bit should be set to " 001 ".

Bit2-0 : MIPI_TX0_CPHY_PARAMETER3

This bit sets the parameter of the MIPI C-PHY transmitter (Port 0).

This bit should be set to " 001 ".

For Desay

MIPI C-PHY Transmitter 0 Setup - 81 : MIPI C-PHY transmitter 0 setup 81 (bank10,0xF6,RW)

This register controls the setting of the MIPI C-PHY transmitter.

7	6	5	4	3	2	1	0
—	—	—	MIPI_TX0_CPHY_PARAMETER4	—	—	—	—
RW-0	RW-0	RW-0	RW-0	RW-0	RW-0	RW-0	RW-0

Bit4 : MIPI_TX0_CPHY_PARAMETER4

This bit sets the parameter of the MIPI C-PHY transmitter (Port 0).

This bit should be set to " 1 ".

For Desay

MIPI C-PHY Transmitter 0 Setup - 82 : MIPI C-PHY transmitter 0 setup 82 (bank10,0xF7,RW)

This register controls the setting of the MIPI C-PHY transmitter.

7	6	5	4	3	2	1	0
MIPI_TX0_CPHY_PARAMETER5[2:0]			—	—	MIPI_TX0_CPHY_PARAMETER6[2:0]		
RW-0	RW-0	RW-0	RW-0	RW-0	RW-0	RW-0	RW-0

Bit7-5 : MIPI_TX0_CPHY_PARAMETER5

This bit sets the parameter of the MIPI C-PHY transmitter (Port 0).

This bit should be set to " 011 ".

Bit2-0 : MIPI_TX0_CPHY_PARAMETER6

This bit sets the parameter of the MIPI C-PHY transmitter (Port 0).

This bit should be set to " 100 ".

For Desay

MIPI C-PHY Transmitter 1 Setup - 1 : MIPI C-PHY transmitter 1 setup 1 (bank11,0x00,RW)

This register controls the setting of the MIPI C-PHY transmitter.

7	6	5	4	3	2	1	0
—	—	—	—	—	MIPI_TX1_CPHY_MIRROR_MODE	MIPI_TX1_CPHY_DATA_MODE[1:0]	
RW-0	RW-0	RW-0	RW-0	RW-0	RW-0	RW-1	RW-0

Bit2 : MIPI_TX1_CPHY_MIRROR_MODE

This bit enables or disables the mirroring between the Sub port 2 and Sub port 3 of MIPI C-PHY output (Port 1). The Sub port 3 outputs the same data as Sub port 2.

0: Disable
1: Enable

The mirroring can be used when MIPI_TX0_CPHY_DATA_MODE is set to C-PHY Data Mode 1. The number of data transmission lanes can be set to 1 for C-PHY.

Bit1-0 : MIPI_TX1_CPHY_DATA_MODE

This bit sets the assignment of the data lane. Please refer to the description of functions and operation. (Port 1)

00 : Reserved
01 : Reserved
10 : C-PHY Data Mode 0
11 : C-PHY Data Mode 1

For Desay

MIPI C-PHY Transmitter 1 Setup - 2 : MIPI C-PHY transmitter 1 setup 2 (bank11,0x3E,RW)

This register controls the setting of the MIPI C-PHY transmitter.

7	6	5	4	3	2	1	0
MIPI_TX1_CPHY_T3_PREPARE[7:0]							
RW-0	RW-0	RW-0	RW-0	RW-0	RW-0	RW-0	RW-0

Bit7-0 : MIPI_TX1_CPHY_T3_PREPARE

These bits set the LSB 8 bits ([7:0]) of the t3-PREPARE parameter of MIPI C-PHY output (Port 1).

The parameter is (setting value + 1) x 7 [UI] period.

For Desay

MIPI C-PHY Transmitter 1 Setup - 3 : MIPI C-PHY transmitter 1 setup 3 (bank11,0x3F,RW)

This register controls the setting of the MIPI C-PHY transmitter.

7	6	5	4	3	2	1	0
—	—	—	—	—	MIPI_TX1_CPHY_T3_PREPARE[10:8]		
RW-0	RW-0	RW-0	RW-0	RW-0	RW-0	RW-0	RW-0

Bit2-0 : MIPI_TX1_CPHY_T3_PREPARE

These bits set the MSB 3 bits ([10:8]) of the t3-PREPARE parameter of MIPI C-PHY output (Port 1).

The parameter is (setting value + 1) x 7 [UI] period.

For Desay

MIPI C-PHY Transmitter 1 Setup - 4 : MIPI C-PHY transmitter 1 setup 4 (bank11,0x40,RW)

This register controls the setting of the MIPI C-PHY transmitter.

7	6	5	4	3	2	1	0
MIPI_TX1_CPHY_T3_PREBEGIN[7:0]							
RW-0	RW-0	RW-0	RW-0	RW-0	RW-0	RW-0	RW-0

Bit7-0 : MIPI_TX1_CPHY_T3_PREBEGIN

These bits set the LSB 8 bits ([7:0]) of the t3-PREBEGIN parameter of MIPI C-PHY output (Port 1).

The parameter is (setting value + 1) x 7 [UI] period.

For Desay

MIPI C-PHY Transmitter 1 Setup - 5 : MIPI C-PHY transmitter 1 setup 5 (bank11,0x41,RW)

This register controls the setting of the MIPI C-PHY transmitter.

7	6	5	4	3	2	1	0
—	—	—	—	—	MIPI_TX1_CPHY_T3_PREBEGIN [10:8]		
RW-0	RW-0	RW-0	RW-0	RW-0	RW-0	RW-0	RW-0

Bit2-0 : MIPI_TX1_CPHY_T3_PREBEGIN

These bits set the MSB 3 bits ([10:8]) of the t3-PREBEGIN parameter of MIPI C-PHY output (Port 1).

The parameter is (setting value + 1) x 7 [UI] period.

For Desay

MIPI C-PHY Transmitter 1 Setup - 6 : MIPI C-PHY transmitter 1 setup 6 (bank11,0x42,RW)

This register controls the setting of the MIPI C-PHY transmitter.

7	6	5	4	3	2	1	0
MIPI_TX1_CPHY_T3_POST[7:0]							
RW-0	RW-0	RW-0	RW-0	RW-0	RW-0	RW-0	RW-0

Bit7-0 : MIPI_TX1_CPHY_T3_POST

These bits set the LSB 8 bits ([7:0]) of the t3-POST parameter of MIPI C-PHY output (Port 1).

The parameter is (setting value + 1) x 7 [UI] period.

For Desay

MIPI C-PHY Transmitter 1 Setup - 7 : MIPI C-PHY transmitter 1 setup 7 (bank11,0x43,RW)

This register controls the setting of the MIPI C-PHY transmitter.

7	6	5	4	3	2	1	0
—	—	—	—	—	MIPI_TX1_CPHY_T3_POST[10:8]		
RW-0	RW-0	RW-0	RW-0	RW-0	RW-0	RW-0	RW-0

Bit2-0 : MIPI_TX1_CPHY_T3_POST

These bits set the MSB 3 bits ([10:8]) of the t3-POST parameter of MIPI C-PHY output (Port 1).

The parameter is (setting value + 1) x 7 [UI] period.

For Desay

MIPI C-PHY Transmitter 1 Setup - 8 : MIPI C-PHY transmitter 1 setup 8 (bank11,0x44,RW)

This register controls the setting of the MIPI C-PHY transmitter.

7	6	5	4	3	2	1	0
MIPI_TX1_CPHY_T3_HS_EXIT[7:0]							
RW-0	RW-0	RW-0	RW-0	RW-0	RW-0	RW-0	RW-0

Bit7-0 : MIPI_TX1_CPHY_T3_HS_EXIT

These bits set the LSB 8 bits ([7:0]) of the tHS-EXIT parameter of MIPI C-PHY output (Port 1).

The parameter is (setting value + 1) x 7 [UI] period.

For Desay

MIPI C-PHY Transmitter 1 Setup - 9 : MIPI C-PHY transmitter 1 setup 9 (bank11,0x45,RW)

This register controls the setting of the MIPI C-PHY transmitter.

7	6	5	4	3	2	1	0
—	—	—	—	—	MIPI_TX1_CPHY_T3_HS_EXIT[10:8]		
RW-0	RW-0	RW-0	RW-0	RW-0	RW-0	RW-0	RW-0

Bit2-0 : MIPI_TX1_CPHY_T3_HS_EXIT

These bits set the MSB 3 bits ([10:8]) of the tHS-EXIT parameter of MIPI C-PHY output (Port 1).

The parameter is (setting value + 1) x 7 [UI] period.

For Desay

MIPI C-PHY Transmitter 1 Setup - 10 : MIPI C-PHY transmitter 1 setup 10 (bank11,0x46,RW)

This register controls the setting of the MIPI C-PHY transmitter.

7	6	5	4	3	2	1	0
MIPI_TX1_CPHY_T3_LPX[7:0]							
RW-0	RW-0	RW-0	RW-0	RW-0	RW-0	RW-0	RW-0

Bit7-0 : MIPI_TX1_CPHY_T3_LPX

These bits set the LSB 8 bits ([7:0]) of the tLPX parameter of MIPI C-PHY output (Port 1).

The parameter is (setting value + 1) x 7 [UI] period.

For Desay

MIPI C-PHY Transmitter 1 Setup - 11 : MIPI C-PHY transmitter 1 setup 11 (bank11,0x47,RW)

This register controls the setting of the MIPI C-PHY transmitter.

7	6	5	4	3	2	1	0
—	—	—	—	—	MIPI_TX1_CPHY_T3_LPX[10:8]		
RW-0	RW-0	RW-0	RW-0	RW-0	RW-0	RW-0	RW-0

Bit2-0 : MIPI_TX1_CPHY_T3_LPX

These bits set the MSB 3 bits ([10:8]) of the tLPX parameter of MIPI C-PHY output (Port 1).

The parameter is (setting value + 1) x 7 [UI] period.

For Desay

MIPI C-PHY Transmitter 1 Setup - 12 : MIPI C-PHY transmitter 1 setup 12 (bank11,0x48,RW)

This register controls the setting of the MIPI C-PHY transmitter.

7	6	5	4	3	2	1	0
MIPI_TX1_CPHY_TWAKEUP[7:0]							
RW-1	RW-1	RW-1	RW-0	RW-1	RW-0	RW-0	RW-0

Bit7-0 : MIPI_TX1_CPHY_TWAKEUP

These bits set the LSB 8 bits ([7:0]) of the Twakeup parameter of MIPI C-PHY output (Port 1). For 1 ms, "0100 0001 1010" (TBD) should be set.

For Desay

MIPI C-PHY Transmitter 1 Setup - 13 : MIPI C-PHY transmitter 1 setup 13 (bank11,0x49,RW)

This register controls the setting of the MIPI C-PHY transmitter.

7	6	5	4	3	2	1	0
—	—	—	—	MIPI_TX1_CPHY_TWAKEUP[11:8]			
RW-0	RW-0	RW-0	RW-0	RW-0	RW-0	RW-1	RW-1

Bit3-0 : MIPI_TX1_CPHY_TWAKEUP

These bits set the MSB 4 bits ([11:8]) of the Twakeup parameter of MIPI C-PHY output (Port 1). For 1 ms, "0100 0001 1010" (TBD) should be set.

For Desay

MIPI C-PHY Transmitter 1 Setup - 14 : MIPI C-PHY transmitter 1 setup 14 (bank11,0x4A,RW)

This register controls the setting of the MIPI C-PHY transmitter.

7	6	5	4	3	2	1	0
MIPI_TX1_CPHY_TINIT[7:0]							
RW-0	RW-1	RW-1	RW-0	RW-0	RW-1	RW-0	RW-0

Bit7-0 : MIPI_TX1_CPHY_TINIT

These bits set the LSB 8 bits ([7:0]) of the TINIT parameter of MIPI C-PHY output (Port 1). For 100 us, "00 0110 1001" (TBD) should be set.

For Desay

MIPI C-PHY Transmitter 1 Setup - 15 : MIPI C-PHY transmitter 1 setup 15 (bank11,0x4B,RW)

This register controls the setting of the MIPI C-PHY transmitter.

7	6	5	4	3	2	1	0
—	—	—	—	—	—	MIPI_TX1_CPHY_TINIT[9:8]	
RW-0	RW-0	RW-0	RW-0	RW-0	RW-0	RW-0	RW-0

Bit1-0 : MIPI_TX1_CPHY_TINIT

These bits set the MSB 2 bits ([9:8]) of the TINIT parameter of MIPI C-PHY output (Port 1). For 100 us, "00 0110 1001" (TBD) should be set.

For Desay

MIPI C-PHY Transmitter 1 Setup - 17 : MIPI C-PHY transmitter 1 setup 17 (bank11,0x4D,RW)

This register controls the setting of the MIPI C-PHY transmitter.

7	6	5	4	3	2	1	0
—	—	MIPI_TX1_CPHY_STB_MODE[1:0]		—	—	—	—
RW-0	RW-0	RW-0	RW-0	RW-0	RW-0	RW-0	RW-0

Bit5-4 : MIPI_TX1_CPHY_STB_MODE

These bits set ULPS entry setting in standby mode. "10" should be set.

00 : Reserved
01 : Reserved
10 : No ULPS entry for all lanes
11 : Reserved

For Desay

MIPI C-PHY Transmitter 1 Setup - 20 : MIPI C-PHY transmitter 1 setup 20 (bank11,0x53,RW)

This register controls the setting of the MIPI C-PHY transmitter.

7	6	5	4	3	2	1	0
—	—	—	—	—	—	MIPI_TX1_2_CPHY_CSI_LANE_NUMBER [1:0]	
RW-0	RW-0	RW-0	RW-0	RW-0	RW-0	RW-1	RW-0

Bit1-0 : MIPI_TX1_2_CPHY_CSI_LANE_NUMBER

These bits set the number of the used MIPI C-PHY output data lanes (Sub port 2).

"00" or "01" should be set for C-PHY Data Mode 1.

00 : 1 lane
01 : 2 lane
10 : 3 lane
11 : Reserved

For Desay

MIPI C-PHY Transmitter 1 Setup - 21 : MIPI C-PHY transmitter 1 setup 21 (bank11,0x54,RW)

This register controls the setting of the MIPI C-PHY transmitter.

7	6	5	4	3	2	1	0
—	—	—	—	—	—	MIPI_TX1_3_CPHY_CSI_LANE_NUMBER [1:0]	
RW-0	RW-0	RW-0	RW-0	RW-0	RW-0	RW-1	RW-0

Bit1-0 : MIPI_TX1_3_CPHY_CSI_LANE_NUMBER

These bits set the number of the used MIPI C-PHY output data lanes (Sub port 3).

"00" should be set for C-PHY Data Mode 1.

00 : 1 lane
01 : 2 lane
10 : Reserved
11 : Reserved

For Desay

MIPI C-PHY Transmitter 1 Setup - 23 : MIPI C-PHY transmitter 1 setup 23 (bank11,0x83,RW)

This register controls the setting of the MIPI C-PHY transmitter.

7	6	5	4	3	2	1	0
—	—	MIPI_TX1_2_CPHY_CALPREAMBLE_FMT_SELECT[1:0]		—	—	—	MIPI_TX1_2_CPHY_CALPREAMBLE_ENABLE
RW-0	RW-0	RW-0	RW-0	RW-0	RW-0	RW-0	RW-0

Bit5-4 : MIPI_TX1_2_CPHY_CALPREAMBLE_FMT_SELECT

These bits set the MIPI C-PHY Calibration Preamble Format (Sub port 2).

00 : Format 1
01 : Format 2
10 : Format 3
11 : Reserved

Bit0 : MIPI_TX1_2_CPHY_CALPREAMBLE_ENABLE

This bit enables or disables MIPI C-PHY Calibration Preamble transmission (Sub port 2).

0 : Disable
1 : Enable

For Desay

MIPI C-PHY Transmitter 1 Setup - 24 : MIPI C-PHY transmitter 1 setup 24 (bank11,0x84,RW)

This register controls the setting of the MIPI C-PHY transmitter.

7	6	5	4	3	2	1	0
—	—	MIPI_TX1_3_CPHY_CALPREAMBLE_FMT_SELECT[1:0]		—	—	—	MIPI_TX1_3_CPHY_CALPREAMBLE_ENABLE
RW-0	RW-0	RW-0	RW-0	RW-0	RW-0	RW-0	RW-0

Bit5-4 : MIPI_TX1_3_CPHY_CALPREAMBLE_FMT_SELECT

These bits set the MIPI C-PHY Calibration Preamble Format (Sub port 3).

00 : Format 1
01 : Format 2
10 : Format 3
11 : Reserved

Bit0 : MIPI_TX1_3_CPHY_CALPREAMBLE_ENABLE

This bit enables or disables MIPI C-PHY Calibration Preamble transmission (Sub port 3).

0 : Disable
1 : Enable

For Desay

MIPI C-PHY Transmitter 1 Setup - 25 : MIPI C-PHY transmitter 1 setup 25 (bank11,0x85,RW)

This register controls the setting of the MIPI C-PHY transmitter.

7	6	5	4	3	2	1	0
MIPI_TX1_2_CPHY_T3_CALPREAMBLE[7:0]							
RW-0	RW-0	RW-1	RW-0	RW-1	RW-0	RW-0	RW-1

Bit7-0 : MIPI_TX1_2_CPHY_T3_CALPREAMBLE

These bits set the LSB 8 bits ([7:0]) of the trasnsmission period (t3-CALPREAMBLE_TX) of MIPI C-PHY Calibration Preamble (Sub port 2).

The period is (setting value + 1) x 7 [UI].

For Desay

MIPI C-PHY Transmitter 1 Setup - 26 : MIPI C-PHY transmitter 1 setup 26 (bank11,0x86,RW)

This register controls the setting of the MIPI C-PHY transmitter.

7	6	5	4	3	2	1	0
—	—	—	—	—	MIPI_TX1_2_CPHY_T3_CALPREAMBLE[10:8]		
RW-0	RW-0	RW-0	RW-0	RW-0	RW-0	RW-0	RW-0

Bit2-0 : MIPI_TX1_2_CPHY_T3_CALPREAMBLE

These bits set the MSB 3 bits ([10:8]) of the trasnsmission period (t3-CALPREAMBLE_TX) of MIPI C-PHY Calibration Preamble (Sub port 2).

The period is (setting value + 1) x 7 [UI].

For Desay

MIPI C-PHY Transmitter 1 Setup - 27 : MIPI C-PHY transmitter 1 setup 27 (bank11,0x87,RW)

This register controls the setting of the MIPI C-PHY transmitter.

7	6	5	4	3	2	1	0
MIPI_TX1_3_CPHY_T3_CALPREAMBLE[7:0]							
RW-0	RW-0	RW-1	RW-0	RW-1	RW-0	RW-0	RW-1

Bit7-0 : MIPI_TX1_3_CPHY_T3_CALPREAMBLE

These bits set the LSB 8 bits ([7:0]) of the trasnsmission period (t3-CALPREAMBLE_TX) of MIPI C-PHY Calibration Preamble (Sub port 3).

The period is (setting value + 1) x 7 [UI].

For Desay

MIPI C-PHY Transmitter 1 Setup - 28 : MIPI C-PHY transmitter 1 setup 28 (bank11,0x88,RW)

This register controls the setting of the MIPI C-PHY transmitter.

7	6	5	4	3	2	1	0
—	—	—	—	—	MIPI_TX1_3_CPHY_T3_CALPREAMBLE[10:8]		
RW-0	RW-0	RW-0	RW-0	RW-0	RW-0	RW-0	RW-0

Bit2-0 : MIPI_TX1_3_CPHY_T3_CALPREAMBLE

These bits set the MSB 3 bits ([10:8]) of the trasnsmission period (t3-CALPREAMBLE_TX) of MIPI C-PHY Calibration Preamble (Sub port 3).

The period is (setting value + 1) x 7 [UI].

For Desay

MIPI C-PHY Transmitter 1 Setup - 29 : MIPI C-PHY transmitter 1 setup 29 (bank11,0x89,RW)

This register controls the setting of the MIPI C-PHY transmitter.

7	6	5	4	3	2	1	0
MIPI_TX1_2_CPHY_T3_CALALTSEQ[7:0]							
RW-0	RW-0	RW-0	RW-0	RW-0	RW-0	RW-1	RW-1

Bit7-0 : MIPI_TX1_2_CPHY_T3_CALALTSEQ

These bits set the LSB 8 bits ([7:0]) of the alternate sequence trasnsmission period (t3-CALALTSEQ_TX) of C-PHY Calibration Preamble format 2 (Sub port 2).

The period is (setting value + 1) x 7 [UI].

For Desay

MIPI C-PHY Transmitter 1 Setup - 30 : MIPI C-PHY transmitter 1 setup 30 (bank11,0x8A,RW)

This register controls the setting of the MIPI C-PHY transmitter.

7	6	5	4	3	2	1	0
—	—	—	—	—	MIPI_TX1_2_CPHY_T3_CALALTSEQ[10:8]		
RW-0	RW-0	RW-0	RW-0	RW-0	RW-0	RW-0	RW-0

Bit2-0 : MIPI_TX1_2_CPHY_T3_CALALTSEQ

These bits set the MSB 3 bits ([10:8]) of the alternate sequence trasnsmission period (t3-CALALTSEQ_TX) of C-PHY Calibration Preamble format 2 (Sub port 2).

The period is (setting value + 1) x 7 [UI].

For Desay

MIPI C-PHY Transmitter 1 Setup - 31 : MIPI C-PHY transmitter 1 setup 31 (bank11,0x8B,RW)

This register controls the setting of the MIPI C-PHY transmitter.

7	6	5	4	3	2	1	0
MIPI_TX1_3_CPHY_T3_CALALTSEQ[7:0]							
RW-0	RW-0	RW-0	RW-0	RW-0	RW-0	RW-1	RW-1

Bit7-0 : MIPI_TX1_3_CPHY_T3_CALALTSEQ

These bits set the LSB 8 bits ([7:0]) of the alternate sequence trasnsmission period (t3-CALALTSEQ_TX) of MIPI C-PHY Calibration Preamble Format 2 (Sub port 3).

The period is (setting value + 1) x 7 [UI].

For Desay

MIPI C-PHY Transmitter 1 Setup - 32 : MIPI C-PHY transmitter 1 setup 32 (bank11,0x8C,RW)

This register controls the setting of the MIPI C-PHY transmitter.

7	6	5	4	3	2	1	0
—	—	—	—	—	MIPI_TX1_3_CPHY_T3_CALALTSEQ[10:8]		
RW-0	RW-0	RW-0	RW-0	RW-0	RW-0	RW-0	RW-0

Bit2-0 : MIPI_TX1_3_CPHY_T3_CALALTSEQ

These bits set the MSB 3 bits ([10:8]) of the alternate sequence trasnsmission period (t3-CALALTSEQ_TX) of MIPI C-PHY Calibration Preamble Format 2 (Sub port 3).

The period is (setting value + 1) x 7 [UI].

For Desay

MIPI C-PHY Transmitter 1 Setup - 33 : MIPI C-PHY transmitter 1 setup 33 (bank11,0x8D,RW)

This register controls the setting of the MIPI C-PHY transmitter.

7	6	5	4	3	2	1	0
MIPI_TX1_2_CPHY_T3_CALUDEFSEQ[7:0]							
RW-0	RW-0	RW-0	RW-0	RW-0	RW-0	RW-1	RW-1

Bit7-0 : MIPI_TX1_2_CPHY_T3_CALUDEFSEQ

These bits set the LSB 8 bits ([7:0]) of the user-defined sequence trasnsmission period (t3-CALUDEFSEQ_TX) of MIPI C-PHY Calibration Preamble Format 3 (Sub port 2).

The period is (setting value + 1) x 7 [UI].

For Desay

MIPI C-PHY Transmitter 1 Setup - 34 : MIPI C-PHY transmitter 1 setup 34 (bank11,0x8E,RW)

This register controls the setting of the MIPI C-PHY transmitter.

7	6	5	4	3	2	1	0
—	—	—	—	—	MIPI_TX1_2_CPHY_T3_CALUDEFSEQ[10:8]		
RW-0	RW-0	RW-0	RW-0	RW-0	RW-0	RW-0	RW-0

Bit2-0 : MIPI_TX1_2_CPHY_T3_CALUDEFSEQ

These bits set the MSB 3 bits ([10:8]) of the user-defined sequence trasnsmission period (t3-CALUDEFSEQ_TX) of MIPI C-PHY Calibration Preamble Format 3 (Sub port 2).

The period is (setting value + 1) x 7 [UI].

For Desay

MIPI C-PHY Transmitter 1 Setup - 35 : MIPI C-PHY transmitter 1 setup 35 (bank11,0x8F,RW)

This register controls the setting of the MIPI C-PHY transmitter.

7	6	5	4	3	2	1	0
MIPI_TX1_3_CPHY_T3_CALUDEFSEQ[7:0]							
RW-0	RW-0	RW-0	RW-0	RW-0	RW-0	RW-1	RW-1

Bit7-0 : MIPI_TX1_3_CPHY_T3_CALUDEFSEQ

These bits set the LSB 8 bits ([7:0]) of the user-defined sequence trasnsmission period (t3-CALUDEFSEQ_TX) of MIPI C-PHY Calibration Preamble Format 3 (Sub port 3).

The period is (setting value + 1) x 7 [UI].

For Desay

MIPI C-PHY Transmitter 1 Setup - 36 : MIPI C-PHY transmitter 1 setup 36 (bank11,0x90,RW)

This register controls the setting of the MIPI C-PHY transmitter.

7	6	5	4	3	2	1	0
—	—	—	—	—	MIPI_TX1_3_CPHY_T3_CALUDEFSEQ[10:8]		
RW-0	RW-0	RW-0	RW-0	RW-0	RW-0	RW-0	RW-0

Bit2-0 : MIPI_TX1_3_CPHY_T3_CALUDEFSEQ

These bits set the MSB 3 bits ([10:8]) of the user-defined sequence trasnsmission period (t3-CALUDEFSEQ_TX) of MIPI C-PHY Calibration Preamble Format 3 (Sub port 3).

The period is (setting value + 1) x 7 [UI].

For Desay

MIPI C-PHY Transmitter 1 Setup - 37 : MIPI C-PHY transmitter 1 setup 37 (bank11,0x91,RW)

This register controls the setting of the MIPI C-PHY transmitter.

7	6	5	4	3	2	1	0
MIPI_TX1_CPHY_CALPRBS_SEED_DL1[7:0]							
RW-0	RW-0	RW-0	RW-0	RW-0	RW-0	RW-0	RW-1

Bit7-0 : MIPI_TX1_CPHY_CALPRBS_SEED_DL1

These bits set the LSB 8 bits ([7:0]) of the seed value of PRBS9 pattern for the MIPI C-PHY Calibration Preamble Format 2 on Data Lane 1.

Setting "0 000 0000" to [8:0] is prohibited.

For Desay

MIPI C-PHY Transmitter 1 Setup - 38 : MIPI C-PHY transmitter 1 setup 38 (bank11,0x92,RW)

This register controls the setting of the MIPI C-PHY transmitter.

7	6	5	4	3	2	1	0
MIPI_TX1_CPHY_CALPRBS_SEED_DL1[15:8]							
RW-0	RW-0	RW-0	RW-0	RW-0	RW-0	RW-0	RW-0

Bit7-0 : MIPI_TX1_CPHY_CALPRBS_SEED_DL1

These bits set the MSB 8 bits ([15:8]) of the seed value of PRBS9 pattern for the MIPI C-PHY Calibration Preamble Format 2 on Data Lane 1.

Setting "0 000 0000" to [8:0] is prohibited.

For Desay

MIPI C-PHY Transmitter 1 Setup - 39 : MIPI C-PHY transmitter 1 setup 39 (bank11,0x93,RW)

This register controls the setting of the MIPI C-PHY transmitter.

7	6	5	4	3	2	1	0
MIPI_TX1_CPHY_CALPRBS_SEED_DL2[7:0]							
RW-0	RW-0	RW-0	RW-0	RW-0	RW-0	RW-0	RW-1

Bit7-0 : MIPI_TX1_CPHY_CALPRBS_SEED_DL2

These bits set the LSB 8 bits ([7:0]) of the seed value of PRBS9 pattern for the MIPI C-PHY Calibration Preamble Format 2 on Data Lane 2.

Setting "0 000 0000" to [8:0] is prohibited.

For Desay

MIPI C-PHY Transmitter 1 Setup - 40 : MIPI C-PHY transmitter 1 setup 40 (bank11,0x94,RW)

This register controls the setting of the MIPI C-PHY transmitter.

7	6	5	4	3	2	1	0
MIPI_TX1_CPHY_CALPRBS_SEED_DL2[15:8]							
RW-0	RW-0	RW-0	RW-0	RW-0	RW-0	RW-0	RW-0

Bit7-0 : MIPI_TX1_CPHY_CALPRBS_SEED_DL2

These bits set the MSB 8 bits ([15:8]) of the seed value of PRBS9 pattern for the MIPI C-PHY Calibration Preamble Format 2 on Data Lane 2.

Setting "0 000 0000" to [8:0] is prohibited.

For Desay

MIPI C-PHY Transmitter 1 Setup - 41 : MIPI C-PHY transmitter 1 setup 41 (bank11,0x95,RW)

This register controls the setting of the MIPI C-PHY transmitter.

7	6	5	4	3	2	1	0
MIPI_TX1_CPHY_CALPRBS_SEED_DL3[7:0]							
RW-0	RW-0	RW-0	RW-0	RW-0	RW-0	RW-0	RW-1

Bit7-0 : MIPI_TX1_CPHY_CALPRBS_SEED_DL3

These bits set the LSB 8 bits ([7:0]) of the seed value of PRBS9 pattern for the MIPI C-PHY Calibration Preamble Format 2 on Data Lane 3.

Setting "0 000 0000" to [8:0] is prohibited.

For Desay

MIPI C-PHY Transmitter 1 Setup - 42 : MIPI C-PHY transmitter 1 setup 42 (bank11,0x96,RW)

This register controls the setting of the MIPI C-PHY transmitter.

7	6	5	4	3	2	1	0
MIPI_TX1_CPHY_CALPRBS_SEED_DL3[15:8]							
RW-0	RW-0	RW-0	RW-0	RW-0	RW-0	RW-0	RW-0

Bit7-0 : MIPI_TX1_CPHY_CALPRBS_SEED_DL3

These bits set the MSB 8 bits ([15:8]) of the seed value of PRBS9 pattern for the MIPI C-PHY Calibration Preamble Format 2 on Data Lane 3.

Setting "0 000 0000" to [8:0] is prohibited.

For Desay

MIPI C-PHY Transmitter 1 Setup - 43 : MIPI C-PHY transmitter 1 setup 43 (bank11,0x97,RW)

This register controls the setting of the MIPI C-PHY transmitter.

7	6	5	4	3	2	1	0
—	MIPI_TX1_2_CPHY_CALUDEFSEQ_01[2:0]			—	MIPI_TX1_2_CPHY_CALUDEFSEQ_00[2:0]		
RW-0	RW-0	RW-0	RW-0	RW-0	RW-0	RW-0	RW-0

Bit6-4 : MIPI_TX1_2_CPHY_CALUDEFSEQ_01

These bits set the value of symbol 1 of user-defined sequence of MIPI C-PHY calibration preamble format 3 (Sub port 2).

Setting of 0x5 to 0x7 is prohibitted.

Bit2-0 : MIPI_TX1_2_CPHY_CALUDEFSEQ_00

These bits set the value of symbol 0 of user-defined sequence of MIPI C-PHY calibration preamble format 3 (Sub port 2).

Setting of 0x5 to 0x7 is prohibitted.

For Desay

MIPI C-PHY Transmitter 1 Setup - 44 : MIPI C-PHY transmitter 1 setup 44 (bank11,0x98,RW)

This register controls the setting of the MIPI C-PHY transmitter.

7	6	5	4	3	2	1	0
—	MIPI_TX1_2_CPHY_CALUDEFSEQ_03[2:0]			—	MIPI_TX1_2_CPHY_CALUDEFSEQ_02[2:0]		
RW-0	RW-0	RW-0	RW-0	RW-0	RW-0	RW-0	RW-0

Bit6-4 : MIPI_TX1_2_CPHY_CALUDEFSEQ_03

These bits set the value of symbol 3 of user-defined sequence of MIPI C-PHY calibration preamble format 3 (Sub port 2).

Setting of 0x5 to 0x7 is prohibitted.

Bit2-0 : MIPI_TX1_2_CPHY_CALUDEFSEQ_02

These bits set the value of symbol 2 of user-defined sequence of MIPI C-PHY calibration preamble format 3 (Sub port 2).

Setting of 0x5 to 0x7 is prohibitted.

For Desay

MIPI C-PHY Transmitter 1 Setup - 45 : MIPI C-PHY transmitter 1 setup 45 (bank11,0x99,RW)

This register controls the setting of the MIPI C-PHY transmitter.

7	6	5	4	3	2	1	0
—	MIPI_TX1_2_CPHY_CALUDEFSEQ_05[2:0]			—	MIPI_TX1_2_CPHY_CALUDEFSEQ_04[2:0]		
RW-0	RW-0	RW-0	RW-0	RW-0	RW-0	RW-0	RW-0

Bit6-4 : MIPI_TX1_2_CPHY_CALUDEFSEQ_05

These bits set the value of symbol 5 of user-defined sequence of MIPI C-PHY calibration preamble format 3 (Sub port 2).

Setting of 0x5 to 0x7 is prohibitted.

Bit2-0 : MIPI_TX1_2_CPHY_CALUDEFSEQ_04

These bits set the value of symbol 4 of user-defined sequence of MIPI C-PHY calibration preamble format 3 (Sub port 2).

Setting of 0x5 to 0x7 is prohibitted.

For Desay

MIPI C-PHY Transmitter 1 Setup - 46 : MIPI C-PHY transmitter 1 setup 46 (bank11,0x9A,RW)

This register controls the setting of the MIPI C-PHY transmitter.

7	6	5	4	3	2	1	0
—	MIPI_TX1_2_CPHY_CALUDEFSEQ_07[2:0]			—	MIPI_TX1_2_CPHY_CALUDEFSEQ_06[2:0]		
RW-0	RW-0	RW-0	RW-0	RW-0	RW-0	RW-0	RW-0

Bit6-4 : MIPI_TX1_2_CPHY_CALUDEFSEQ_07

These bits set the value of symbol 7 of user-defined sequence of MIPI C-PHY calibration preamble format 3 (Sub port 2).

Setting of 0x5 to 0x7 is prohibitted.

Bit2-0 : MIPI_TX1_2_CPHY_CALUDEFSEQ_06

These bits set the value of symbol 6 of user-defined sequence of MIPI C-PHY calibration preamble format 3 (Sub port 2).

Setting of 0x5 to 0x7 is prohibitted.

For Desay

MIPI C-PHY Transmitter 1 Setup - 47 : MIPI C-PHY transmitter 1 setup 47 (bank11,0x9B,RW)

This register controls the setting of the MIPI C-PHY transmitter.

7	6	5	4	3	2	1	0
—	MIPI_TX1_2_CPHY_CALUDEFSEQ_09[2:0]			—	MIPI_TX1_2_CPHY_CALUDEFSEQ_08[2:0]		
RW-0	RW-0	RW-0	RW-0	RW-0	RW-0	RW-0	RW-0

Bit6-4 : MIPI_TX1_2_CPHY_CALUDEFSEQ_09

These bits set the value of symbol 9 of user-defined sequence of MIPI C-PHY calibration preamble format 3 (Sub port 2).

Setting of 0x5 to 0x7 is prohibitted.

Bit2-0 : MIPI_TX1_2_CPHY_CALUDEFSEQ_08

These bits set the value of symbol 8 of user-defined sequence of MIPI C-PHY calibration preamble format 3 (Sub port 2).

Setting of 0x5 to 0x7 is prohibitted.

For Desay

MIPI C-PHY Transmitter 1 Setup - 48 : MIPI C-PHY transmitter 1 setup 48 (bank11,0x9C,RW)

This register controls the setting of the MIPI C-PHY transmitter.

7	6	5	4	3	2	1	0
—	MIPI_TX1_2_CPHY_CALUDEFSEQ_11[2:0]			—	MIPI_TX1_2_CPHY_CALUDEFSEQ_10[2:0]		
RW-0	RW-0	RW-0	RW-0	RW-0	RW-0	RW-0	RW-0

Bit6-4 : MIPI_TX1_2_CPHY_CALUDEFSEQ_11

These bits set the value of symbol 11 of user-defined sequence of MIPI C-PHY calibration preamble format 3 (Sub port 2).

Setting of 0x5 to 0x7 is prohibitted.

Bit2-0 : MIPI_TX1_2_CPHY_CALUDEFSEQ_10

These bits set the value of symbol 10 of user-defined sequence of MIPI C-PHY calibration preamble format 3 (Sub port 2).

Setting of 0x5 to 0x7 is prohibitted.

For Desay

MIPI C-PHY Transmitter 1 Setup - 49 : MIPI C-PHY transmitter 1 setup 49 (bank11,0x9D,RW)

This register controls the setting of the MIPI C-PHY transmitter.

7	6	5	4	3	2	1	0
—	MIPI_TX1_2_CPHY_CALUDEFSEQ_13[2:0]			—	MIPI_TX1_2_CPHY_CALUDEFSEQ_12[2:0]		
RW-0	RW-0	RW-0	RW-0	RW-0	RW-0	RW-0	RW-0

Bit6-4 : MIPI_TX1_2_CPHY_CALUDEFSEQ_13

These bits set the value of symbol 13 of user-defined sequence of MIPI C-PHY calibration preamble format 3 (Sub port 2).

Setting of 0x5 to 0x7 is prohibitted.

Bit2-0 : MIPI_TX1_2_CPHY_CALUDEFSEQ_12

These bits set the value of symbol 12 of user-defined sequence of MIPI C-PHY calibration preamble format 3 (Sub port 2).

Setting of 0x5 to 0x7 is prohibitted.

For Desay

MIPI C-PHY Transmitter 1 Setup - 50 : MIPI C-PHY transmitter 1 setup 50 (bank11,0x9E,RW)

This register controls the setting of the MIPI C-PHY transmitter.

7	6	5	4	3	2	1	0
—	MIPI_TX1_3_CPHY_CALUDEFSEQ_01[2:0]			—	MIPI_TX1_3_CPHY_CALUDEFSEQ_00[2:0]		
RW-0	RW-0	RW-0	RW-0	RW-0	RW-0	RW-0	RW-0

Bit6-4 : MIPI_TX1_3_CPHY_CALUDEFSEQ_01

These bits set the value of symbol 1 of user-defined sequence of MIPI C-PHY calibration preamble format 3 (Sub port 3).

Setting of 0x5 to 0x7 is prohibitted.

Bit2-0 : MIPI_TX1_3_CPHY_CALUDEFSEQ_00

These bits set the value of symbol 0 of user-defined sequence of MIPI C-PHY calibration preamble format 3 (Sub port 3).

Setting of 0x5 to 0x7 is prohibitted.

For Desay

MIPI C-PHY Transmitter 1 Setup - 51 : MIPI C-PHY transmitter 1 setup 51 (bank11,0x9F,RW)

This register controls the setting of the MIPI C-PHY transmitter.

7	6	5	4	3	2	1	0
—	MIPI_TX1_3_CPHY_CALUDEFSEQ_03[2:0]			—	MIPI_TX1_3_CPHY_CALUDEFSEQ_02[2:0]		
RW-0	RW-0	RW-0	RW-0	RW-0	RW-0	RW-0	RW-0

Bit6-4 : MIPI_TX1_3_CPHY_CALUDEFSEQ_03

These bits set the value of symbol 3 of user-defined sequence of MIPI C-PHY calibration preamble format 3 (Sub port 3).

Setting of 0x5 to 0x7 is prohibitted.

Bit2-0 : MIPI_TX1_3_CPHY_CALUDEFSEQ_02

These bits set the value of symbol 2 of user-defined sequence of MIPI C-PHY calibration preamble format 3 (Sub port 3).

Setting of 0x5 to 0x7 is prohibitted.

For Desay

MIPI C-PHY Transmitter 1 Setup - 52 : MIPI C-PHY transmitter 1 setup 52 (bank11,0xA0,RW)

This register controls the setting of the MIPI C-PHY transmitter.

7	6	5	4	3	2	1	0
—	MIPI_TX1_3_CPHY_CALUDEFSEQ_05[2:0]			—	MIPI_TX1_3_CPHY_CALUDEFSEQ_04[2:0]		
RW-0	RW-0	RW-0	RW-0	RW-0	RW-0	RW-0	RW-0

Bit6-4 : MIPI_TX1_3_CPHY_CALUDEFSEQ_05

These bits set the value of symbol 5 of user-defined sequence of MIPI C-PHY calibration preamble format 3 (Sub port 3).

Setting of 0x5 to 0x7 is prohibitted.

Bit2-0 : MIPI_TX1_3_CPHY_CALUDEFSEQ_04

These bits set the value of symbol 4 of user-defined sequence of MIPI C-PHY calibration preamble format 3 (Sub port 3).

Setting of 0x5 to 0x7 is prohibitted.

For Desay

MIPI C-PHY Transmitter 1 Setup - 53 : MIPI C-PHY transmitter 1 setup 53 (bank11,0xA1,RW)

This register controls the setting of the MIPI C-PHY transmitter.

7	6	5	4	3	2	1	0
—	MIPI_TX1_3_CPHY_CALUDEFSEQ_07[2:0]			—	MIPI_TX1_3_CPHY_CALUDEFSEQ_06[2:0]		
RW-0	RW-0	RW-0	RW-0	RW-0	RW-0	RW-0	RW-0

Bit6-4 : MIPI_TX1_3_CPHY_CALUDEFSEQ_07

These bits set the value of symbol 7 of user-defined sequence of MIPI C-PHY calibration preamble format 3 (Sub port 3).

Setting of 0x5 to 0x7 is prohibitted.

Bit2-0 : MIPI_TX1_3_CPHY_CALUDEFSEQ_06

These bits set the value of symbol 6 of user-defined sequence of MIPI C-PHY calibration preamble format 3 (Sub port 3).

Setting of 0x5 to 0x7 is prohibitted.

For Desay

MIPI C-PHY Transmitter 1 Setup - 54 : MIPI C-PHY transmitter 1 setup 54 (bank11,0xA2,RW)

This register controls the setting of the MIPI C-PHY transmitter.

7	6	5	4	3	2	1	0
—	MIPI_TX1_3_CPHY_CALUDEFSEQ_09[2:0]			—	MIPI_TX1_3_CPHY_CALUDEFSEQ_08[2:0]		
RW-0	RW-0	RW-0	RW-0	RW-0	RW-0	RW-0	RW-0

Bit6-4 : MIPI_TX1_3_CPHY_CALUDEFSEQ_09

These bits set the value of symbol 9 of user-defined sequence of MIPI C-PHY calibration preamble format 3 (Sub port 3).

Setting of 0x5 to 0x7 is prohibitted.

Bit2-0 : MIPI_TX1_3_CPHY_CALUDEFSEQ_08

These bits set the value of symbol 8 of user-defined sequence of MIPI C-PHY calibration preamble format 3 (Sub port 3).

Setting of 0x5 to 0x7 is prohibitted.

For Desay

MIPI C-PHY Transmitter 1 Setup - 55 : MIPI C-PHY transmitter 1 setup 55 (bank11,0xA3,RW)

This register controls the setting of the MIPI C-PHY transmitter.

7	6	5	4	3	2	1	0
—	MIPI_TX1_3_CPHY_CALUDEFSEQ_11[2:0]			—	MIPI_TX1_3_CPHY_CALUDEFSEQ_10[2:0]		
RW-0	RW-0	RW-0	RW-0	RW-0	RW-0	RW-0	RW-0

Bit6-4 : MIPI_TX1_3_CPHY_CALUDEFSEQ_11

These bits set the value of symbol 11 of user-defined sequence of MIPI C-PHY calibration preamble format 3 (Sub port 3).

Setting of 0x5 to 0x7 is prohibitted.

Bit2-0 : MIPI_TX1_3_CPHY_CALUDEFSEQ_10

These bits set the value of symbol 10 of user-defined sequence of MIPI C-PHY calibration preamble format 3 (Sub port 3).

Setting of 0x5 to 0x7 is prohibitted.

For Desay

MIPI C-PHY Transmitter 1 Setup - 56 : MIPI C-PHY transmitter 1 setup 56 (bank11,0xA4,RW)

This register controls the setting of the MIPI C-PHY transmitter.

7	6	5	4	3	2	1	0
—	MIPI_TX1_3_CPHY_CALUDEFSEQ_13[2:0]			—	MIPI_TX1_3_CPHY_CALUDEFSEQ_12[2:0]		
RW-0	RW-0	RW-0	RW-0	RW-0	RW-0	RW-0	RW-0

Bit6-4 : MIPI_TX1_3_CPHY_CALUDEFSEQ_13

These bits set the value of symbol 13 of user-defined sequence of MIPI C-PHY calibration preamble format 3 (Sub port 3).

Setting of 0x5 to 0x7 is prohibitted.

Bit2-0 : MIPI_TX1_3_CPHY_CALUDEFSEQ_12

These bits set the value of symbol 12 of user-defined sequence of MIPI C-PHY calibration preamble format 3 (Sub port 3).

Setting of 0x5 to 0x7 is prohibitted.

For Desay

MIPI C-PHY Transmitter 1 Setup - 60 : MIPI C-PHY transmitter 1 setup 60 (bank11,0xA9,RW)

This register controls the setting of the MIPI C-PHY transmitter.

7	6	5	4	3	2	1	0
—	—	MIPI_TX1_CPHY_DATA_LANE3_ENABLE	MIPI_TX1_CPHY_DATA_LANE2_ENABLE	—	—	—	—
RW-0	RW-0	RW-1	RW-1	RW-0	RW-1	RW-0	RW-1

Bit5 : MIPI_TX1_CPHY_DATA_LANE3_ENABLE

This bit enables or disables MIPI C-PHY Data Lane 3 (Sub port 2).

If the number of the used lanes of sub port 0 is 2 or less, "0" should be set.

0 : Disable
1 : Enable

Bit4 : MIPI_TX1_CPHY_DATA_LANE2_ENABLE

This bit enables or disables MIPI C-PHY Data Lane 2 (Sub port 2).

If the number of the used lanes of sub port 0 is 1 or less, "0" should be set.

0 : Disable
1 : Enable

For Desay

MIPI C-PHY Transmitter 1 Setup - 65 : MIPI C-PHY transmitter 1 setup 65 (bank11,0xDF,RW)

This register controls the setting of the MIPI C-PHY transmitter.

7	6	5	4	3	2	1	0
—	—	MIPI_TX1_CPHY_PARAMETER0[5:0]					
RW-0	RW-0	RW-0	RW-0	RW-0	RW-0	RW-0	RW-0

Bit5-0 : MIPI_TX1_CPHY_PARAMETER0

This bit sets the parameter of the MIPI C-PHY transmitter (Port 1).

This bit should be set to " 001000 ".

For Desay

MIPI C-PHY Transmitter 1 Setup - 68 : MIPI C-PHY transmitter 1 setup 68 (bank11,0xE6,RW)

This register controls the setting of the MIPI C-PHY transmitter.

7	6	5	4	3	2	1	0
—	—	—	—	—	MIPI_TX1_CPHY_PARAMETER1[2:0]		
RW-0	RW-0	RW-0	RW-0	RW-0	RW-0	RW-0	RW-0

Bit2-0 : MIPI_TX1_CPHY_PARAMETER1

This bit sets the parameter of the MIPI C-PHY transmitter (Port 1).

This bit should be set to " 001 ".

For Desay

MIPI C-PHY Transmitter 1 Setup - 71 : MIPI C-PHY transmitter 1 setup 71 (bank11,0xEA,RW)

This register controls the setting of the MIPI C-PHY transmitter.

7	6	5	4	3	2	1	0
—	MIPI_TX1_CPHY_PARAMETER2[2:0]			—	MIPI_TX1_CPHY_PARAMETER3[2:0]		
RW-0	RW-0	RW-0	RW-0	RW-0	RW-0	RW-0	RW-0

Bit6-4 : MIPI_TX1_CPHY_PARAMETER2

This bit sets the parameter of the MIPI C-PHY transmitter (Port 1).

This bit should be set to " 001 ".

Bit2-0 : MIPI_TX1_CPHY_PARAMETER3

This bit sets the parameter of the MIPI C-PHY transmitter (Port 1).

This bit should be set to " 001 ".

For Desay

MIPI C-PHY Transmitter 1 Setup - 81 : MIPI C-PHY transmitter 1 setup 81 (bank11,0xF6,RW)

This register controls the setting of the MIPI C-PHY transmitter.

7	6	5	4	3	2	1	0
—	—	—	MIPI_TX1_CPHY_PARAMETER4	—	—	—	—
RW-0	RW-0	RW-0	RW-0	RW-0	RW-0	RW-0	RW-0

Bit4 : MIPI_TX1_CPHY_PARAMETER4

This bit sets the parameter of the MIPI C-PHY transmitter (Port 1).

This bit should be set to " 1 ".

For Desay

MIPI C-PHY Transmitter 1 Setup - 82 : MIPI C-PHY transmitter 1 setup 82 (bank11,0xF7,RW)

This register controls the setting of the MIPI C-PHY transmitter.

7	6	5	4	3	2	1	0
MIPI_TX1_CPHY_PARAMETER5[2:0]			—	—	MIPI_TX1_CPHY_PARAMETER6[2:0]		
RW-0	RW-0	RW-0	RW-0	RW-0	RW-0	RW-0	RW-0

Bit7-5 : MIPI_TX1_CPHY_PARAMETER5

This bit sets the parameter of the MIPI C-PHY transmitter (Port 1).

This bit should be set to " 011 ".

Bit2-0 : MIPI_TX1_CPHY_PARAMETER6

This bit sets the parameter of the MIPI C-PHY transmitter (Port 1).

This bit should be set to " 100 ".

For Desay

MIPI C-PHY Transmitter Common Setup - 1 : MIPI C-PHY transmitter common setup 1 (bank12,0x00,RW)

This register controls the setting of the MIPI C-PHY transmitter.

7	6	5	4	3	2	1	0
—	—	—	MIPI_TX1_CPHY_MODE_ENABLE	—	—	—	MIPI_TX0_CPHY_MODE_ENABLE
RW-0	RW-0	RW-0	RW-0	RW-0	RW-0	RW-0	RW-0

Bit4 : MIPI_TX1_CPHY_MODE_ENABLE

This bit enables or disables the MIPI C-PHY transmitter (Port1).

0: Disable (MIPI D-PHY transmitter Mode)

1: Enable (MIPI C-PHY transmitter Mode)

Bit0 : MIPI_TX0_CPHY_MODE_ENABLE

This bit enables or disables the MIPI C-PHY transmitter (Port0).

0: Disable (MIPI D-PHY transmitter Mode)

1: Enable (MIPI C-PHY transmitter Mode)

For Desay

Unloader 0 Setup - 5 : Unloader 0 setup 5 (bank12,0x10,RW)

This register controls the setting of the video data transmission.

7	6	5	4	3	2	1	0
—	—	—	—	—	—	—	UNLOADER0_MIPITX_EXTRA_VCID_OVR_MODE_ENABLE
RW-0	RW-0	RW-0	RW-0	RW-0	RW-0	RW-0	RW-0

Bit0 : UNLOADER0_MIPITX_EXTRA_VCID_OVR_MODE_ENABLE

This bit enables or disables the MIPITX Extra Virtual Channel ID Override Mode in the Unloader 0.

0: Disable
1: Enable

For Desay

Unloader 0 Setup - 6 : Unloader 0 setup 6 (bank12,0x11,RW)

This register controls the setting of the video data transmission.

7	6	5	4	3	2	1	0
—	—	—	UNLOADER0_MIPITX_EXTRA_VCID_OVR_1_ENABLE	—	—	—	UNLOADER0_MIPITX_EXTRA_VCID_OVR_0_ENABLE
RW-0	RW-0	RW-0	RW-0	RW-0	RW-0	RW-0	RW-0

Bit4 : UNLOADER0_MIPITX_EXTRA_VCID_OVR_1_ENABLE

This bit enables or disables the override-setting of 2nd Virtual Channel ID number in MIPITX Extra Virtual Channel ID Override Mode for the Unloader 0.

0: Disable
1: Enable

Bit0 : UNLOADER0_MIPITX_EXTRA_VCID_OVR_0_ENABLE

This bit enables or disables the override-setting of 1st Virtual Channel ID number in MIPITX Extra Virtual Channel ID Override Mode of the Unloader 0.

0: Disable
1: Enable

For Desay

Unloader 0 Setup - 7 : Unloader 0 setup 7 (bank12,0x12,RW)

This register controls the setting of the video data transmission.

7	6	5	4	3	2	1	0
UNLOADER0_MIPITX_EXTRA_VCID_SELECT_1[3:0]				UNLOADER0_MIPITX_EXTRA_VCID_SELECT_0[3:0]			
RW-0	RW-0	RW-0	RW-0	RW-0	RW-0	RW-0	RW-0

Bit7-4 : UNLOADER0_MIPITX_EXTRA_VCID_SELECT_1

This bit sets the 2nd Virtual Channel ID to be selected in MIPITX Extra Virtual Channel ID Override Mode for Unloader 0.

Bit3-0 : UNLOADER0_MIPITX_EXTRA_VCID_SELECT_0

This bit sets the 1st Virtual Channel ID to be selected in MIPITX Extra Virtual Channel ID Override Mode for Unloader 0.

For Desay

Unloader 0 Setup - 8 : Unloader 0 setup 8 (bank12,0x13,RW)

This register controls the setting of the video data transmission.

7	6	5	4	3	2	1	0
UNLOADER0_MIPITX_EXTRA_VCID_OVERRIDE_1[3:0]				UNLOADER0_MIPITX_EXTRA_VCID_OVERRIDE_0[3:0]			
RW-0	RW-0	RW-0	RW-0	RW-0	RW-0	RW-0	RW-0

Bit7-4 : UNLOADER0_MIPITX_EXTRA_VCID_OVERRIDE_1

This bit sets the 2nd Virtual Channel ID to be overridden in MIPITX Extra Virtual Channel ID Override Mode for Unloader 0.

Bit3-0 : UNLOADER0_MIPITX_EXTRA_VCID_OVERRIDE_0

This bit sets the 1st Virtual Channel ID to be overridden in MIPITX Extra Virtual Channel ID Override Mode for Unloader 0.

For Desay

Unloader 0 Setup - 9 : Unloader 0 setup 9 (bank12,0x14,RW)

This register controls the setting of the video data transmission.

7	6	5	4	3	2	1	0
—	—	—	UNLOADER0_MIPITX_EXTRA_VCID_MUTE_1	—	—	—	UNLOADER0_MIPITX_EXTRA_VCID_MUTE_0
RW-0	RW-0	RW-0	RW-0	RW-0	RW-0	RW-0	RW-0

Bit4 : UNLOADER0_MIPITX_EXTRA_VCID_MUTE_1

This bit sets the mute of the output video data which is selected 2nd Virtual Channel ID in MIPITX Extra VCID Override Mode for Unloader 0.

When the mute turns on, the black screen is transmitted instead of the input video data.

0: Mute OFF
1: Mute ON

Bit0 : UNLOADER0_MIPITX_EXTRA_VCID_MUTE_0

This bit sets the mute of the output video data which is selected 1st Virtual Channel ID in MIPITX Extra VCID Override Mode for Unloader 0.

When the mute turns on, the black screen is transmitted instead of the input video data.

0: Mute OFF
1: Mute ON

For Desay

Unloader 1 Setup - 5 : Unloader 1 setup 5 (bank12,0x18,RW)

This register controls the setting of the video data transmission.

7	6	5	4	3	2	1	0
—	—	—	—	—	—	—	UNLOADER1_MIPITX_EXTRA_VCID_OVR_MODE_ENABLE
RW-0	RW-0	RW-0	RW-0	RW-0	RW-0	RW-0	RW-0

Bit0 : UNLOADER1_MIPITX_EXTRA_VCID_OVR_MODE_ENABLE

This bit enables or disables the MIPITX Extra Virtual Channel ID Override Mode in the Unloader 1.

0: Disable
1: Enable

For Desay

Unloader 1 Setup - 6 : Unloader 1 setup 6 (bank12,0x19,RW)

This register controls the setting of the video data transmission.

7	6	5	4	3	2	1	0
—	—	—	UNLOADER1_MIPITX_EXTRA_VCID_OVR_1_ENABLE	—	—	—	UNLOADER1_MIPITX_EXTRA_VCID_OVR_0_ENABLE
RW-0	RW-0	RW-0	RW-0	RW-0	RW-0	RW-0	RW-0

Bit4 : UNLOADER1_MIPITX_EXTRA_VCID_OVR_1_ENABLE

This bit enables or disables the override-setting of 2nd Virtual Channel ID number in MIPITX Extra Virtual Channel ID Override Mode for the Unloader 1.

0: Disable
1: Enable

Bit0 : UNLOADER1_MIPITX_EXTRA_VCID_OVR_0_ENABLE

This bit enables or disables the override-setting of 1st Virtual Channel ID number in MIPITX Extra Virtual Channel ID Override Mode of the Unloader 1.

0: Disable
1: Enable

For Desay

Unloader 1 Setup - 7 : Unloader 1 setup 7 (bank12,0x1A,RW)

This register controls the setting of the video data transmission.

7	6	5	4	3	2	1	0
UNLOADER1_MIPITX_EXTRA_VCID_SELECT_1[3:0]				UNLOADER1_MIPITX_EXTRA_VCID_SELECT_0[3:0]			
RW-0	RW-0	RW-0	RW-0	RW-0	RW-0	RW-0	RW-0

Bit7-4 : UNLOADER1_MIPITX_EXTRA_VCID_SELECT_1

This bit sets the 2nd Virtual Channel ID to be selected in MIPITX Extra Virtual Channel ID Override Mode for Unloader 1.

Bit3-0 : UNLOADER1_MIPITX_EXTRA_VCID_SELECT_0

This bit sets the 1st Virtual Channel ID to be selected in MIPITX Extra Virtual Channel ID Override Mode for Unloader 1.

For Desay

Unloader 1 Setup - 8 : Unloader 1 setup 8 (bank12,0x1B,RW)

This register controls the setting of the video data transmission.

7	6	5	4	3	2	1	0
UNLOADER1_MIPITX_EXTRA_VCID_OVERRIDE_1[3:0]				UNLOADER1_MIPITX_EXTRA_VCID_OVERRIDE_0[3:0]			
RW-0	RW-0	RW-0	RW-0	RW-0	RW-0	RW-0	RW-0

Bit7-4 : UNLOADER1_MIPITX_EXTRA_VCID_OVERRIDE_1

This bit sets the 2nd Virtual Channel ID to be overridden in MIPITX Extra Virtual Channel ID Override Mode for Unloader 1.

Bit3-0 : UNLOADER1_MIPITX_EXTRA_VCID_OVERRIDE_0

This bit sets the 1st Virtual Channel ID to be overridden in MIPITX Extra Virtual Channel ID Override Mode for Unloader 1.

For Desay

Unloader 1 Setup - 9 : Unloader 1 setup 9 (bank12,0x1C,RW)

This register controls the setting of the video data transmission.

7	6	5	4	3	2	1	0
—	—	—	UNLOADER1_MIPITX_EXTRA_VCID_MUTE_1	—	—	—	UNLOADER1_MIPITX_EXTRA_VCID_MUTE_0
RW-0	RW-0	RW-0	RW-0	RW-0	RW-0	RW-0	RW-0

Bit4 : UNLOADER1_MIPITX_EXTRA_VCID_MUTE_1

This bit sets the mute of the output video data which is selected 2nd Virtual Channel ID in MIPITX Extra VCID Override Mode for Unloader 1.

When the mute turns on, the black screen is transmitted instead of the input video data.

0: Mute OFF
1: Mute ON

Bit0 : UNLOADER1_MIPITX_EXTRA_VCID_MUTE_0

This bit sets the mute of the output video data which is selected 1st Virtual Channel ID in MIPITX Extra VCID Override Mode for Unloader 1.

When the mute turns on, the black screen is transmitted instead of the input video data.

0: Mute OFF
1: Mute ON

For Desay

Unloader 2 Setup - 5 : Unloader 2 setup 5 (bank12,0x20,RW)

This register controls the setting of the video data transmission.

7	6	5	4	3	2	1	0
—	—	—	—	—	—	—	UNLOADER2_MIPITX_EXTRA_VCID_OVR_MODE_ENABLE
RW-0	RW-0	RW-0	RW-0	RW-0	RW-0	RW-0	RW-0

Bit0 : UNLOADER2_MIPITX_EXTRA_VCID_OVR_MODE_ENABLE

This bit enables or disables the MIPITX Extra Virtual Channel ID Override Mode in the Unloader 2.

0: Disable
1: Enable

For Desay

Unloader 2 Setup - 6 : Unloader 2 setup 6 (bank12,0x21,RW)

This register controls the setting of the video data transmission.

7	6	5	4	3	2	1	0
—	—	—	UNLOADER2_MIPITX_EXTRA_VCID_OVR_1_ENABLE	—	—	—	UNLOADER2_MIPITX_EXTRA_VCID_OVR_0_ENABLE
RW-0	RW-0	RW-0	RW-0	RW-0	RW-0	RW-0	RW-0

Bit4 : UNLOADER2_MIPITX_EXTRA_VCID_OVR_1_ENABLE

This bit enables or disables the override-setting of 2nd Virtual Channel ID number in MIPITX Extra Virtual Channel ID Override Mode for the Unloader 2.

0: Disable
1: Enable

Bit0 : UNLOADER2_MIPITX_EXTRA_VCID_OVR_0_ENABLE

This bit enables or disables the override-setting of 1st Virtual Channel ID number in MIPITX Extra Virtual Channel ID Override Mode of the Unloader 2.

0: Disable
1: Enable

For Desay

Unloader 2 Setup - 7 : Unloader 2 setup 7 (bank12,0x22,RW)

This register controls the setting of the video data transmission.

7	6	5	4	3	2	1	0
UNLOADER2_MIPITX_EXTRA_VCID_SELECT_1[3:0]				UNLOADER2_MIPITX_EXTRA_VCID_SELECT_0[3:0]			
RW-0	RW-0	RW-0	RW-0	RW-0	RW-0	RW-0	RW-0

Bit7-4 : UNLOADER2_MIPITX_EXTRA_VCID_SELECT_1

This bit sets the 2nd Virtual Channel ID to be selected in MIPITX Extra Virtual Channel ID Override Mode for Unloader 2.

Bit3-0 : UNLOADER2_MIPITX_EXTRA_VCID_SELECT_0

This bit sets the 1st Virtual Channel ID to be selected in MIPITX Extra Virtual Channel ID Override Mode for Unloader 2.

For Desay

Unloader 2 Setup - 8 : Unloader 2 setup 8 (bank12,0x23,RW)

This register controls the setting of the video data transmission.

7	6	5	4	3	2	1	0
UNLOADER2_MIPITX_EXTRA_VCID_OVERRIDE_1[3:0]				UNLOADER2_MIPITX_EXTRA_VCID_OVERRIDE_0[3:0]			
RW-0	RW-0	RW-0	RW-0	RW-0	RW-0	RW-0	RW-0

Bit7-4 : UNLOADER2_MIPITX_EXTRA_VCID_OVERRIDE_1

This bit sets the 2nd Virtual Channel ID to be overridden in MIPITX Extra Virtual Channel ID Override Mode for Unloader 2.

Bit3-0 : UNLOADER2_MIPITX_EXTRA_VCID_OVERRIDE_0

This bit sets the 1st Virtual Channel ID to be overridden in MIPITX Extra Virtual Channel ID Override Mode for Unloader 2.

For Desay

Unloader 2 Setup - 9 : Unloader 2 setup 9 (bank12,0x24,RW)

This register controls the setting of the video data transmission.

7	6	5	4	3	2	1	0
—	—	—	UNLOADER2_MIPITX_EXTRA_VCID_MUTE_1	—	—	—	UNLOADER2_MIPITX_EXTRA_VCID_MUTE_0
RW-0	RW-0	RW-0	RW-0	RW-0	RW-0	RW-0	RW-0

Bit4 : UNLOADER2_MIPITX_EXTRA_VCID_MUTE_1

This bit sets the mute of the output video data which is selected 2nd Virtual Channel ID in MIPITX Extra VCID Override Mode for Unloader 2.

When the mute turns on, the black screen is transmitted instead of the input video data.

0: Mute OFF
1: Mute ON

Bit0 : UNLOADER2_MIPITX_EXTRA_VCID_MUTE_0

This bit sets the mute of the output video data which is selected 1st Virtual Channel ID in MIPITX Extra VCID Override Mode for Unloader 2.

When the mute turns on, the black screen is transmitted instead of the input video data.

0: Mute OFF
1: Mute ON

For Desay

Unloader 3 Setup - 5 : Unloader 3 setup 5 (bank12,0x28,RW)

This register controls the setting of the video data transmission.

7	6	5	4	3	2	1	0
—	—	—	—	—	—	—	UNLOADER3_MIPITX_EXTRA_VCID_OVR_MODE_ENABLE
RW-0	RW-0	RW-0	RW-0	RW-0	RW-0	RW-0	RW-0

Bit0 : UNLOADER3_MIPITX_EXTRA_VCID_OVR_MODE_ENABLE

This bit enables or disables the MIPITX Extra Virtual Channel ID Override Mode in the Unloader 3.

0: Disable
1: Enable

For Desay

Unloader 3 Setup - 6 : Unloader 3 setup 6 (bank12,0x29,RW)

This register controls the setting of the video data transmission.

7	6	5	4	3	2	1	0
—	—	—	UNLOADER3_MIPITX_EXTRA_VCID_OVR_1_ENABLE	—	—	—	UNLOADER3_MIPITX_EXTRA_VCID_OVR_0_ENABLE
RW-0	RW-0	RW-0	RW-0	RW-0	RW-0	RW-0	RW-0

Bit4 : UNLOADER3_MIPITX_EXTRA_VCID_OVR_1_ENABLE

This bit enables or disables the override-setting of 2nd Virtual Channel ID number in MIPITX Extra Virtual Channel ID Override Mode for the Unloader 3.

0: Disable
1: Enable

Bit0 : UNLOADER3_MIPITX_EXTRA_VCID_OVR_0_ENABLE

This bit enables or disables the override-setting of 1st Virtual Channel ID number in MIPITX Extra Virtual Channel ID Override Mode of the Unloader 3.

0: Disable
1: Enable

For Desay

Unloader 3 Setup - 7 : Unloader 3 setup 7 (bank12,0x2A,RW)

This register controls the setting of the video data transmission.

7	6	5	4	3	2	1	0
UNLOADER3_MIPITX_EXTRA_VCID_SELECT_1[3:0]				UNLOADER3_MIPITX_EXTRA_VCID_SELECT_0[3:0]			
RW-0	RW-0	RW-0	RW-0	RW-0	RW-0	RW-0	RW-0

Bit7-4 : UNLOADER3_MIPITX_EXTRA_VCID_SELECT_1

This bit sets the 2nd Virtual Channel ID to be selected in MIPITX Extra Virtual Channel ID Override Mode for Unloader 3.

Bit3-0 : UNLOADER3_MIPITX_EXTRA_VCID_SELECT_0

This bit sets the 1st Virtual Channel ID to be selected in MIPITX Extra Virtual Channel ID Override Mode for Unloader 3.

For Desay

Unloader 3 Setup - 8 : Unloader 3 setup 8 (bank12,0x2B,RW)

This register controls the setting of the video data transmission.

7	6	5	4	3	2	1	0
UNLOADER3_MIPITX_EXTRA_VCID_OVERRIDE_1[3:0]				UNLOADER3_MIPITX_EXTRA_VCID_OVERRIDE_0[3:0]			
RW-0	RW-0	RW-0	RW-0	RW-0	RW-0	RW-0	RW-0

Bit7-4 : UNLOADER3_MIPITX_EXTRA_VCID_OVERRIDE_1

This bit sets the 2nd Virtual Channel ID to be overridden in MIPITX Extra Virtual Channel ID Override Mode for Unloader 3.

Bit3-0 : UNLOADER3_MIPITX_EXTRA_VCID_OVERRIDE_0

This bit sets the 1st Virtual Channel ID to be overridden in MIPITX Extra Virtual Channel ID Override Mode for Unloader 3.

For Desay

Unloader 3 Setup - 9 : Unloader 3 setup 9 (bank12,0x2C,RW)

This register controls the setting of the video data transmission.

7	6	5	4	3	2	1	0
—	—	—	UNLOADER3_MIPITX_EXTRA_VCID_MUTE_1	—	—	—	UNLOADER3_MIPITX_EXTRA_VCID_MUTE_0
RW-0	RW-0	RW-0	RW-0	RW-0	RW-0	RW-0	RW-0

Bit4 : UNLOADER3_MIPITX_EXTRA_VCID_MUTE_1

This bit sets the mute of the output video data which is selected 2nd Virtual Channel ID in MIPITX Extra VCID Override Mode for Unloader 3.

When the mute turns on, the black screen is transmitted instead of the input video data.

0: Mute OFF
1: Mute ON

Bit0 : UNLOADER3_MIPITX_EXTRA_VCID_MUTE_0

This bit sets the mute of the output video data which is selected 1st Virtual Channel ID in MIPITX Extra VCID Override Mode for Unloader 3.

When the mute turns on, the black screen is transmitted instead of the input video data.

0: Mute OFF
1: Mute ON

For Desay

Unloader 4 Setup - 5 : Unloader 4 setup 5 (bank12,0x30,RW)

This register controls the setting of the video data transmission.

7	6	5	4	3	2	1	0
—	—	—	—	—	—	—	UNLOADER4_MIPITX_EXTRA_VCID_OVR_MODE_ENABLE
RW-0	RW-0	RW-0	RW-0	RW-0	RW-0	RW-0	RW-0

Bit0 : UNLOADER4_MIPITX_EXTRA_VCID_OVR_MODE_ENABLE

This bit enables or disables the MIPITX Extra Virtual Channel ID Override Mode in the Unloader 4.

0: Disable
1: Enable

For Desay

Unloader 4 Setup - 6 : Unloader 4 setup 6 (bank12,0x31,RW)

This register controls the setting of the video data transmission.

7	6	5	4	3	2	1	0
—	—	—	UNLOADER4_MIPITX_EXTRA_VCID_OVR_1_ENABLE	—	—	—	UNLOADER4_MIPITX_EXTRA_VCID_OVR_0_ENABLE
RW-0	RW-0	RW-0	RW-0	RW-0	RW-0	RW-0	RW-0

Bit4 : UNLOADER4_MIPITX_EXTRA_VCID_OVR_1_ENABLE

This bit enables or disables the override-setting of 2nd Virtual Channel ID number in MIPITX Extra Virtual Channel ID Override Mode for the Unloader 4.

0: Disable
1: Enable

Bit0 : UNLOADER4_MIPITX_EXTRA_VCID_OVR_0_ENABLE

This bit enables or disables the override-setting of 1st Virtual Channel ID number in MIPITX Extra Virtual Channel ID Override Mode of the Unloader 4.

0: Disable
1: Enable

For Desay

Unloader 4 Setup - 7 : Unloader 4 setup 7 (bank12,0x32,RW)

This register controls the setting of the video data transmission.

7	6	5	4	3	2	1	0
UNLOADER4_MIPITX_EXTRA_VCID_SELECT_1[3:0]				UNLOADER4_MIPITX_EXTRA_VCID_SELECT_0[3:0]			
RW-0	RW-0	RW-0	RW-0	RW-0	RW-0	RW-0	RW-0

Bit7-4 : UNLOADER4_MIPITX_EXTRA_VCID_SELECT_1

This bit sets the 2nd Virtual Channel ID to be selected in MIPITX Extra Virtual Channel ID Override Mode for Unloader 4.

Bit3-0 : UNLOADER4_MIPITX_EXTRA_VCID_SELECT_0

This bit sets the 1st Virtual Channel ID to be selected in MIPITX Extra Virtual Channel ID Override Mode for Unloader 4.

For Desay

Unloader 4 Setup - 8 : Unloader 4 setup 8 (bank12,0x33,RW)

This register controls the setting of the video data transmission.

7	6	5	4	3	2	1	0
UNLOADER4_MIPITX_EXTRA_VCID_OVERRIDE_1[3:0]				UNLOADER4_MIPITX_EXTRA_VCID_OVERRIDE_0[3:0]			
RW-0	RW-0	RW-0	RW-0	RW-0	RW-0	RW-0	RW-0

Bit7-4 : UNLOADER4_MIPITX_EXTRA_VCID_OVERRIDE_1

This bit sets the 2nd Virtual Channel ID to be overridden in MIPITX Extra Virtual Channel ID Override Mode for Unloader 4.

Bit3-0 : UNLOADER4_MIPITX_EXTRA_VCID_OVERRIDE_0

This bit sets the 1st Virtual Channel ID to be overridden in MIPITX Extra Virtual Channel ID Override Mode for Unloader 4.

For Desay

Unloader 4 Setup - 9 : Unloader 4 setup 9 (bank12,0x34,RW)

This register controls the setting of the video data transmission.

7	6	5	4	3	2	1	0
—	—	—	UNLOADER4_MIPITX_EXTRA_VCID_MUTE_1	—	—	—	UNLOADER4_MIPITX_EXTRA_VCID_MUTE_0
RW-0	RW-0	RW-0	RW-0	RW-0	RW-0	RW-0	RW-0

Bit4 : UNLOADER4_MIPITX_EXTRA_VCID_MUTE_1

This bit sets the mute of the output video data which is selected 2nd Virtual Channel ID in MIPITX Extra VCID Override Mode for Unloader 4.

When the mute turns on, the black screen is transmitted instead of the input video data.

0: Mute OFF
1: Mute ON

Bit0 : UNLOADER4_MIPITX_EXTRA_VCID_MUTE_0

This bit sets the mute of the output video data which is selected 1st Virtual Channel ID in MIPITX Extra VCID Override Mode for Unloader 4.

When the mute turns on, the black screen is transmitted instead of the input video data.

0: Mute OFF
1: Mute ON

For Desay

Unloader 5 Setup - 5 : Unloader 5 setup 5 (bank12,0x38,RW)

This register controls the setting of the video data transmission.

7	6	5	4	3	2	1	0
—	—	—	—	—	—	—	UNLOADER5_MIPITX_EXTRA_VCID_OVR_MODE_ENABLE
RW-0	RW-0	RW-0	RW-0	RW-0	RW-0	RW-0	RW-0

Bit0 : UNLOADER5_MIPITX_EXTRA_VCID_OVR_MODE_ENABLE

This bit enables or disables the MIPITX Extra Virtual Channel ID Override Mode in the Unloader 5.

0: Disable
1: Enable

For Desay

Unloader 5 Setup - 6 : Unloader 5 setup 6 (bank12,0x39,RW)

This register controls the setting of the video data transmission.

7	6	5	4	3	2	1	0
—	—	—	UNLOADER5_MIPITX_EXTRA_VCID_OVR_1_ENABLE	—	—	—	UNLOADER5_MIPITX_EXTRA_VCID_OVR_0_ENABLE
RW-0	RW-0	RW-0	RW-0	RW-0	RW-0	RW-0	RW-0

Bit4 : UNLOADER5_MIPITX_EXTRA_VCID_OVR_1_ENABLE

This bit enables or disables the override-setting of 2nd Virtual Channel ID number in MIPITX Extra Virtual Channel ID Override Mode for the Unloader 5.

0: Disable
1: Enable

Bit0 : UNLOADER5_MIPITX_EXTRA_VCID_OVR_0_ENABLE

This bit enables or disables the override-setting of 1st Virtual Channel ID number in MIPITX Extra Virtual Channel ID Override Mode of the Unloader 5.

0: Disable
1: Enable

For Desay

Unloader 5 Setup - 7 : Unloader 5 setup 7 (bank12,0x3A,RW)

This register controls the setting of the video data transmission.

7	6	5	4	3	2	1	0
UNLOADER5_MIPITX_EXTRA_VCID_SELECT_1[3:0]				UNLOADER5_MIPITX_EXTRA_VCID_SELECT_0[3:0]			
RW-0	RW-0	RW-0	RW-0	RW-0	RW-0	RW-0	RW-0

Bit7-4 : UNLOADER5_MIPITX_EXTRA_VCID_SELECT_1

This bit sets the 2nd Virtual Channel ID to be selected in MIPITX Extra Virtual Channel ID Override Mode for Unloader 5.

Bit3-0 : UNLOADER5_MIPITX_EXTRA_VCID_SELECT_0

This bit sets the 1st Virtual Channel ID to be selected in MIPITX Extra Virtual Channel ID Override Mode for Unloader 5.

For Desay

Unloader 5 Setup - 8 : Unloader 5 setup 8 (bank12,0x3B,RW)

This register controls the setting of the video data transmission.

7	6	5	4	3	2	1	0
UNLOADER5_MIPITX_EXTRA_VCID_OVERRIDE_1[3:0]				UNLOADER5_MIPITX_EXTRA_VCID_OVERRIDE_0[3:0]			
RW-0	RW-0	RW-0	RW-0	RW-0	RW-0	RW-0	RW-0

Bit7-4 : UNLOADER5_MIPITX_EXTRA_VCID_OVERRIDE_1

This bit sets the 2nd Virtual Channel ID to be overridden in MIPITX Extra Virtual Channel ID Override Mode for Unloader 5.

Bit3-0 : UNLOADER5_MIPITX_EXTRA_VCID_OVERRIDE_0

This bit sets the 1st Virtual Channel ID to be overridden in MIPITX Extra Virtual Channel ID Override Mode for Unloader 5.

For Desay

Unloader 5 Setup - 9 : Unloader 5 setup 9 (bank12,0x3C,RW)

This register controls the setting of the video data transmission.

7	6	5	4	3	2	1	0
—	—	—	UNLOADER5_MIPITX_EXTRA_VCID_MUTE_1	—	—	—	UNLOADER5_MIPITX_EXTRA_VCID_MUTE_0
RW-0	RW-0	RW-0	RW-0	RW-0	RW-0	RW-0	RW-0

Bit4 : UNLOADER5_MIPITX_EXTRA_VCID_MUTE_1

This bit sets the mute of the output video data which is selected 2nd Virtual Channel ID in MIPITX Extra VCID Override Mode for Unloader 5.

When the mute turns on, the black screen is transmitted instead of the input video data.

0: Mute OFF
1: Mute ON

Bit0 : UNLOADER5_MIPITX_EXTRA_VCID_MUTE_0

This bit sets the mute of the output video data which is selected 1st Virtual Channel ID in MIPITX Extra VCID Override Mode for Unloader 5.

When the mute turns on, the black screen is transmitted instead of the input video data.

0: Mute OFF
1: Mute ON

For Desay

Unloader 6 Setup - 5 : Unloader 6 setup 5 (bank12,0x40,RW)

This register controls the setting of the video data transmission.

7	6	5	4	3	2	1	0
—	—	—	—	—	—	—	UNLOADER6_MIPITX_EXTRA_VCID_OVR_MODE_ENABLE
RW-0	RW-0	RW-0	RW-0	RW-0	RW-0	RW-0	RW-0

Bit0 : UNLOADER6_MIPITX_EXTRA_VCID_OVR_MODE_ENABLE

This bit enables or disables the MIPITX Extra Virtual Channel ID Override Mode in the Unloader 6.

0: Disable
1: Enable

For Desay

Unloader 6 Setup - 6 : Unloader 6 setup 6 (bank12,0x41,RW)

This register controls the setting of the video data transmission.

7	6	5	4	3	2	1	0
—	—	—	UNLOADER6_MIPITX_EXTRA_VCID_OVR_1_ENABLE	—	—	—	UNLOADER6_MIPITX_EXTRA_VCID_OVR_0_ENABLE
RW-0	RW-0	RW-0	RW-0	RW-0	RW-0	RW-0	RW-0

Bit4 : UNLOADER6_MIPITX_EXTRA_VCID_OVR_1_ENABLE

This bit enables or disables the override-setting of 2nd Virtual Channel ID number in MIPITX Extra Virtual Channel ID Override Mode for the Unloader 6.

0: Disable
1: Enable

Bit0 : UNLOADER6_MIPITX_EXTRA_VCID_OVR_0_ENABLE

This bit enables or disables the override-setting of 1st Virtual Channel ID number in MIPITX Extra Virtual Channel ID Override Mode of the Unloader 6.

0: Disable
1: Enable

For Desay

Unloader 6 Setup - 7 : Unloader 6 setup 7 (bank12,0x42,RW)

This register controls the setting of the video data transmission.

7	6	5	4	3	2	1	0
UNLOADER6_MIPITX_EXTRA_VCID_SELECT_1[3:0]				UNLOADER6_MIPITX_EXTRA_VCID_SELECT_0[3:0]			
RW-0	RW-0	RW-0	RW-0	RW-0	RW-0	RW-0	RW-0

Bit7-4 : UNLOADER6_MIPITX_EXTRA_VCID_SELECT_1

This bit sets the 2nd Virtual Channel ID to be selected in MIPITX Extra Virtual Channel ID Override Mode for Unloader 6.

Bit3-0 : UNLOADER6_MIPITX_EXTRA_VCID_SELECT_0

This bit sets the 1st Virtual Channel ID to be selected in MIPITX Extra Virtual Channel ID Override Mode for Unloader 6.

For Desay

Unloader 6 Setup - 8 : Unloader 6 setup 8 (bank12,0x43,RW)

This register controls the setting of the video data transmission.

7	6	5	4	3	2	1	0
UNLOADER6_MIPITX_EXTRA_VCID_OVERRIDE_1[3:0]				UNLOADER6_MIPITX_EXTRA_VCID_OVERRIDE_0[3:0]			
RW-0	RW-0	RW-0	RW-0	RW-0	RW-0	RW-0	RW-0

Bit7-4 : UNLOADER6_MIPITX_EXTRA_VCID_OVERRIDE_1

This bit sets the 2nd Virtual Channel ID to be overridden in MIPITX Extra Virtual Channel ID Override Mode for Unloader 6.

Bit3-0 : UNLOADER6_MIPITX_EXTRA_VCID_OVERRIDE_0

This bit sets the 1st Virtual Channel ID to be overridden in MIPITX Extra Virtual Channel ID Override Mode for Unloader 6.

For Desay

Unloader 6 Setup - 9 : Unloader 6 setup 9 (bank12,0x44,RW)

This register controls the setting of the video data transmission.

7	6	5	4	3	2	1	0
—	—	—	UNLOADER6_MIPITX_EXTRA_VCID_MUTE_1	—	—	—	UNLOADER6_MIPITX_EXTRA_VCID_MUTE_0
RW-0	RW-0	RW-0	RW-0	RW-0	RW-0	RW-0	RW-0

Bit4 : UNLOADER6_MIPITX_EXTRA_VCID_MUTE_1

This bit sets the mute of the output video data which is selected 2nd Virtual Channel ID in MIPITX Extra VCID Override Mode for Unloader 6.

When the mute turns on, the black screen is transmitted instead of the input video data.

0: Mute OFF
1: Mute ON

Bit0 : UNLOADER6_MIPITX_EXTRA_VCID_MUTE_0

This bit sets the mute of the output video data which is selected 1st Virtual Channel ID in MIPITX Extra VCID Override Mode for Unloader 6.

When the mute turns on, the black screen is transmitted instead of the input video data.

0: Mute OFF
1: Mute ON

For Desay

Unloader 7 Setup - 5 : Unloader 7 setup 5 (bank12,0x48,RW)

This register controls the setting of the video data transmission.

7	6	5	4	3	2	1	0
—	—	—	—	—	—	—	UNLOADER7_MIPITX_EXTRA_VCID_OVR_MODE_ENABLE
RW-0	RW-0	RW-0	RW-0	RW-0	RW-0	RW-0	RW-0

Bit0 : UNLOADER7_MIPITX_EXTRA_VCID_OVR_MODE_ENABLE

This bit enables or disables the MIPITX Extra Virtual Channel ID Override Mode in the Unloader 7.

0: Disable
1: Enable

For Desay

Unloader 7 Setup - 6 : Unloader 7 setup 6 (bank12,0x49,RW)

This register controls the setting of the video data transmission.

7	6	5	4	3	2	1	0
—	—	—	UNLOADER7_MIPITX_EXTRA_VCID_OVR_1_ENABLE	—	—	—	UNLOADER7_MIPITX_EXTRA_VCID_OVR_0_ENABLE
RW-0	RW-0	RW-0	RW-0	RW-0	RW-0	RW-0	RW-0

Bit4 : UNLOADER7_MIPITX_EXTRA_VCID_OVR_1_ENABLE

This bit enables or disables the override-setting of 2nd Virtual Channel ID number in MIPITX Extra Virtual Channel ID Override Mode for the Unloader 7.

0: Disable
1: Enable

Bit0 : UNLOADER7_MIPITX_EXTRA_VCID_OVR_0_ENABLE

This bit enables or disables the override-setting of 1st Virtual Channel ID number in MIPITX Extra Virtual Channel ID Override Mode of the Unloader 7.

0: Disable
1: Enable

For Desay

Unloader 7 Setup - 7 : Unloader 7 setup 7 (bank12,0x4A,RW)

This register controls the setting of the video data transmission.

7	6	5	4	3	2	1	0
UNLOADER7_MIPITX_EXTRA_VCID_SELECT_1[3:0]				UNLOADER7_MIPITX_EXTRA_VCID_SELECT_0[3:0]			
RW-0	RW-0	RW-0	RW-0	RW-0	RW-0	RW-0	RW-0

Bit7-4 : UNLOADER7_MIPITX_EXTRA_VCID_SELECT_1

This bit sets the 2nd Virtual Channel ID to be selected in MIPITX Extra Virtual Channel ID Override Mode for Unloader 7.

Bit3-0 : UNLOADER7_MIPITX_EXTRA_VCID_SELECT_0

This bit sets the 1st Virtual Channel ID to be selected in MIPITX Extra Virtual Channel ID Override Mode for Unloader 7.

For Desay

Unloader 7 Setup - 8 : Unloader 7 setup 8 (bank12,0x4B,RW)

This register controls the setting of the video data transmission.

7	6	5	4	3	2	1	0
UNLOADER7_MIPITX_EXTRA_VCID_OVERRIDE_1[3:0]				UNLOADER7_MIPITX_EXTRA_VCID_OVERRIDE_0[3:0]			
RW-0	RW-0	RW-0	RW-0	RW-0	RW-0	RW-0	RW-0

Bit7-4 : UNLOADER7_MIPITX_EXTRA_VCID_OVERRIDE_1

This bit sets the 2nd Virtual Channel ID to be overridden in MIPITX Extra Virtual Channel ID Override Mode for Unloader 7.

Bit3-0 : UNLOADER7_MIPITX_EXTRA_VCID_OVERRIDE_0

This bit sets the 1st Virtual Channel ID to be overridden in MIPITX Extra Virtual Channel ID Override Mode for Unloader 7.

For Desay

Unloader 7 Setup - 9 : Unloader 7 setup 9 (bank12,0x4C,RW)

This register controls the setting of the video data transmission.

7	6	5	4	3	2	1	0
—	—	—	UNLOADER7_MIPITX_EXTRA_VCID_MUTE_1	—	—	—	UNLOADER7_MIPITX_EXTRA_VCID_MUTE_0
RW-0	RW-0	RW-0	RW-0	RW-0	RW-0	RW-0	RW-0

Bit4 : UNLOADER7_MIPITX_EXTRA_VCID_MUTE_1

This bit sets the mute of the output video data which is selected 2nd Virtual Channel ID in MIPITX Extra VCID Override Mode for Unloader 7.

When the mute turns on, the black screen is transmitted instead of the input video data.

0: Mute OFF
1: Mute ON

Bit0 : UNLOADER7_MIPITX_EXTRA_VCID_MUTE_0

This bit sets the mute of the output video data which is selected 1st Virtual Channel ID in MIPITX Extra VCID Override Mode for Unloader 7.

When the mute turns on, the black screen is transmitted instead of the input video data.

0: Mute OFF
1: Mute ON

For Desay

Application Circuit

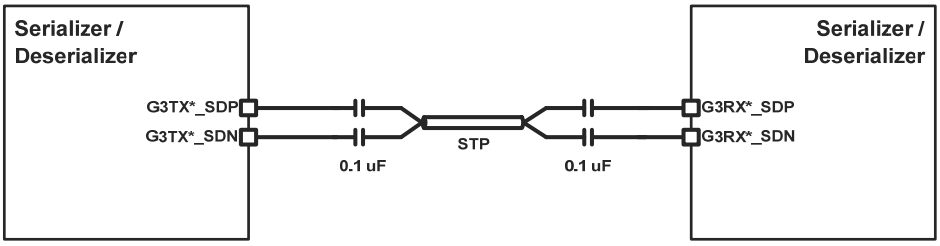

Fig. 22 STP Cable Connection Diagram

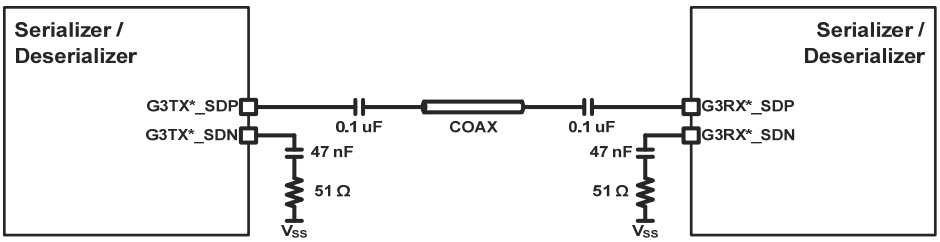

Fig. 23 Coaxial Cable Connection Diagram

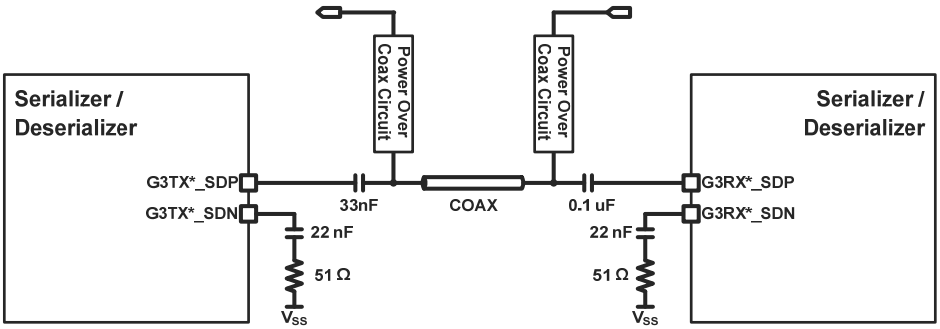

Fig. 24 Power Over Coaxial Cable Connection Diagram

For Desay

Package Outline

(Unit : mm)

This product is a Wettable flank.

The four corner guide pins are used to strengthen the solder joint strength. If it is not need, leave it open.

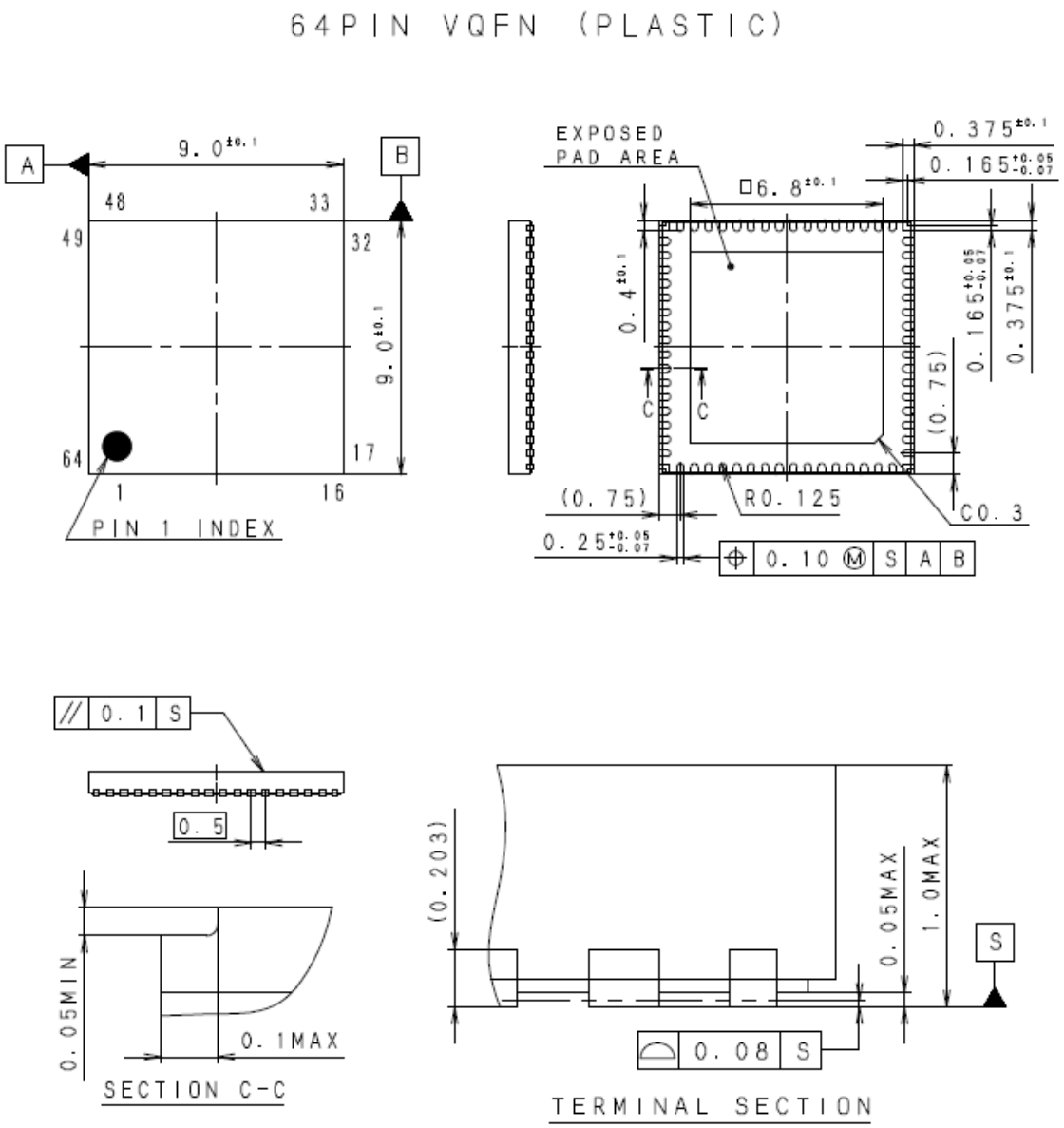

This product is a Wettable flank.

SONY CODE	VQFN-64P-641
JEITA CODE	P-VQFN64-9x9-0.5
JEDEC CODE	————

PACKAGE STRUCTURE

PACKAGE MATERIAL	EPOXY RESIN
TERMINAL TREATMENT	Sn PLATING
TERMINAL MATERIAL	COPPER ALLOY
PACKAGE MASS	0.20g

For Desay

Marking

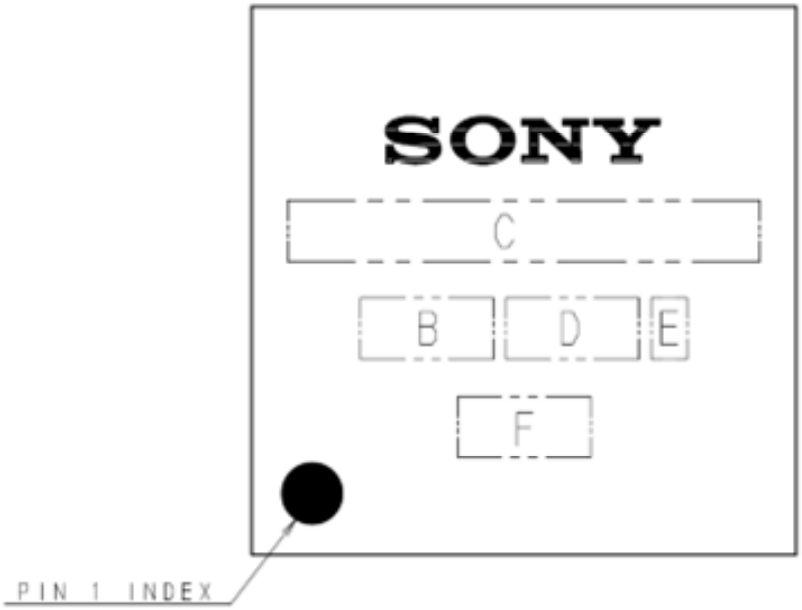

MARKING C: **D4984ER-W**

注1) C部は製品名(Max10文字)を配置する。
(10文字を超える場合は製品名省略標示規定に従う。)
2) B部は年コード(1文字)、週コード(2文字)を配置する。
3) D部は通し番号(3文字)を配置する。
4) E部は組立場所記号(1文字)を配置する。
5) F部はトレースコード(3文字)を配置する。

< INSTRUCTIONS >
1) TYPE NO. (MAX 10 CHARACTERS) IN SECTION C.
(FOR MORE THAN 10 CHARACTERS FOLLOW RULES FOR ABBREVIATIONS.)
2) YEAR CODE (1 CHARACTER), WEEK CODE (2 CHARACTERS) IN SECTION B.
3) SERIAL CODE (3 CHARACTERS) IN SECTION D.
4) ASSEMBLY LOCATION CODE (1 CHARACTER) IN SECTION E.
5) TRACE CODE (3 CHARACTERS) IN SECTION F.

Notice

Purpose of Use of the Products:

Customer shall use the Products with the utmost concern for safety, and shall not use the Products for any purpose that may endanger life or physical wellbeing, or cause serious damage to property or the environment, either through normal use or malfunction.

Use of the Products for purposes other than those stipulated in this specification is strictly prohibited.

Furthermore, usage of the Products for military purposes is strictly prohibited at all times.

Safe Design:

- Customer is responsible for taking due care to ensure the product safety design of its products in which the Products are incorporated, such as by incorporating redundancy, anti-conflagration features, and features to prevent mis-operation, in order to prevent accidents resulting in injury, death, fire, or other social damage as a result of failure.

Product Information:

- The product specifications, circuit examples, and any and all other technical information and content contained in this specification, as well as any other information and materials provided to Customer in connection with the Products (collectively, "Product Information") have been provided to Customer for reference purpose only, and the availability and disclosure of such Product Information and its usage by Customer shall not be construed as giving any indication that Sony, its subsidiaries and/or its licensors will license any right, including intellectual property rights in such Product Information by any implication or otherwise.
- Furthermore, even if circuit examples are included in this specification, they are provided only for reference purpose only, and are merely examples of application. Sony, its Subsidiaries and/or their authorized representatives shall not be liable for any damage arising out of their usage.

EXCLUSION OF WARRANTY ON THE PRODUCTS:

- UNLESS OTHERWISE NOTIFIED BY US IN WRITING, OTHERWISE AGREED BETWEEN THE CUSTOMER AND SONY, ITS SUBSIDIARIES OR ANY OF THEIR AUTHORIZED REPRESENTATIVES IN WRITING, OR TO THE EXTENT PERMITTED BY LAW, THE FOLLOWING TEMS AND CONDITIONS SHALL APPLY TO THE USAGE OF THE PRODUCTS AND THE PRODUCT INFORMATION:

  THE PRODUCTS AND THE PRODUCT INFORMATION ARE PROVIDED BY SONY, ITS SUBSIDIARIES AND/OR THEIR AUTHORIZED REPRESENTATIVES "AS IS" AND WITHOUT WARRANTY OF ANY KIND AND SONY, ITS SUBSIDIARIES AND/OR THEIR AUTHORIZED REPRESENTATIVES MAKE OR HAVE MADE NO REPRESENTATION OR WARRANTY, EXPRESS OR IMPLIED, STATUTORY OR OTHERWISE, AND EXPRESSLY DISCLAIMS ANY REPRESENTATION OR WARRANTY (I) WITH RESPECT TO ACCURACY, RELIABILITY, VALUE, UTILITY OR SAFETY OF THE PRODUCTS AND THE PRODUCT INFORMATION, OR THE ABILITY OF CUSTOMER TO MAKE USE THEREOF, (II) WITH RESPECT TO ANY IMPLEMENTATION OF THE PRODUCTS AND THE TECHNICAL INFORMATION; (III) WITH RESPECT TO MERCHANTABILITY OR FITNESS FOR A PARTICULAR PURPOSE; OR (IV) THAT THE PRODUCTS AND THE PRODUCT INFORMATION OR ANY IMPLEMENTATION THEREOF IS OR WILL BE FREE FROM INFRINGEMENT, MISAPPROPRIATION OR VIOLATION OF ANY INTELLECTUAL PROPERTY RIGHT OR ANY OTHER RIGHT OF ANY THIRD PARTY, AND ANY EQUIVALENTS OF ANY OF THE FOREGOING UNDER THE LAWS OF ANY JURISDICTION.

  CUSTOMER HEREBY ACKNOWLEDGES AND AGREES THAT USE OF THE PRODUCTS AND THE PRODUCT INFORMATION IS AT CUSTOMER'S SOLE RISK AND THAT CUSTOMER IS RESPONSIBLE FOR THE USE OF THE PRODUCTS AND THE PRODUCT INFORMATION, INCLUDING DEFENDING ANY INFRINGEMENT CLAIM MADE AGAINST THE CUSTOMER IN RELATION WITH CUSOMTER'S USAGE OF THE PRODUCTS AND TECHNICAL INFORMATION.

  NO ORAL OR WRITTEN INFORMATION OR ADVICE GIVEN BY SONY, ITS SUBSIDIARIES OR THEIR AUTHORIZED REPRESENTATIVES SHALL CREATE A WARRANTY, DUTY OR CONDITION OR IN ANY WAY INCREASE THE SCOPE OF THIS WARRANTY.

For Desay

LIMITATION OF LIABILITY:

- TO THE EXTENT PERMITTED BY LAW, SONY, ITS SUBSIDIARIES AND/OR THEIR AUTHORIZED REPRESENTATIVES SHALL NOT BE LIABLE FOR ANY INCIDENTAL OR CONSEQUENTIAL DAMAGES FOR BREACH OF ANY EXPRESS OR IMPLIED WARRANTY, BREACH OF CONTRACT, NEGLIGENCE, STRICT LIABILITY OR UNDER ANY OTHER LEGAL THEORY RELATED TO THE PRODUCTS AND PRODUCT INFORMATION, INCLUDING, BUT NOT LIMITED TO, ANY DAMAGES ARISING OUT OF LOSS OF PROFITS, LOSS OF REVENUE, LOSS OF DATA, LOSS OF USE OF THE PRODUCTS OR ANY ASSOCIATED HARDWARE, DOWN TIME AND USER'S TIME, EVEN IF ANY OF THEM HAVE BEEN ADVISED OF THE POSSIBILITY OF SUCH DAMAGES.

Compliance with Laws:

- Customer shall comply with all applicable laws, ordinances, rules and regulations in connection with the usage of the Products, including the export control laws or regulations of various countries and shall be fully responsible for obtaining approvals in connection with the export of the Products in accordance with such said laws, ordinances, rules and/or regulations.

Governing Law:

- This specification and the terms and conditions contained herein shall be governed by and construed in accordance with the laws of Japan, without reference to principles of conflict of laws or choice of laws. All controversies and disputes arising out of or relating to this specification and the terms and conditions contained herein shall be submitted to the exclusive jurisdiction of the Tokyo District Court in Japan as the court of first instance.

Notes:

- The product specifications, circuit examples, technical information and any and all other information and content relating to the Products contained in this specification may be revised or updated by Sony at Sony's sole discretion without prior notice to the Customer and Customer shall abide by their latest versions. Such revisions or updates will be made available to Customer in a way as Sony deems appropriate.
- Ensure that you have read and reviewed the notices contained in our delivery specification as well as this specification when purchasing and using the Products.

For Desay

Preliminary Revision History

Rev. No.	Date	Description
Rev.A0.0	2024/01/22	Initial release.
Rev.A0.1	2024/03/29	Updated the followings. - Electrical Characteristics: DC Characteristics (MIPI C-PHY CSI-2 Interface) - Electrical Characteristics: AC Characteristics (MIPI C-PHY CSI-2 Interface) - Description of Functions and Operation 2: Video Port (MIPI C-PHY CSI-2 Interface) - Description of Functions and Operation 2: Video Port (MIPI C-PHY Global Operation Timing Parameter Setup) - Description of Functions and Operation 2: Video Transmission (MIPITX Extra Virtual Channel ID Override Mode) - Description of Functions and Operation 2: Video Transmission (MIPITX Clock Fixed Mode) - Detailed Description of Registers: MIPI C-PHY Transmitter 0 Setup - Detailed Description of Registers: MIPI C-PHY Transmitter 1 Setup - Detailed Description of Registers: Unloader * Setup
Rev.A0.2	2024/04/16	Updated the followings. - Description of Functions and Operation 2: Video Port (MIPI C-PHY CSI-2 Interface) table - Description of Functions and Operation 2: Video Port (MIPI C-PHY Global Operation Timing Parameter Setup) table

For Desay