FPD-Link™ Overview

June 2025

Santa Clara, CA

TI Information – NDA Restrictions

Texas Instruments

FPD-Link in every car and industrial system

FPD-Link IVI
Business lead: Trang Nguyen

Product families
- High Performance Display SerDes (>6Gbps)
- Entry-Level Display SerDes (≤6Gbps)

Applications
- Automotive Infotainment HU & Displays
- Digital Clusters
- Cockpit Displays

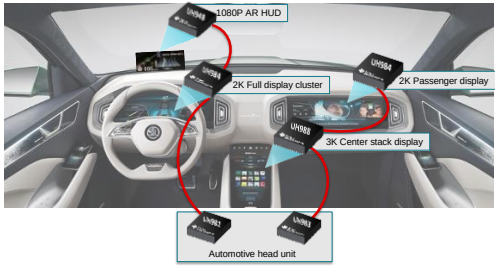

FPD-Link ADAS
Business lead: Ryan Chen

Product families
- High Performance Camera SerDes (>4Gbps)
- Entry-Level Camera SerDes (≤4Gbps)

Applications
- Automotive ADAS Cameras (RVC, SVS, CMS)
- Highly assisted driving (HAD) platforms
- Autonomous vehicles (AV)

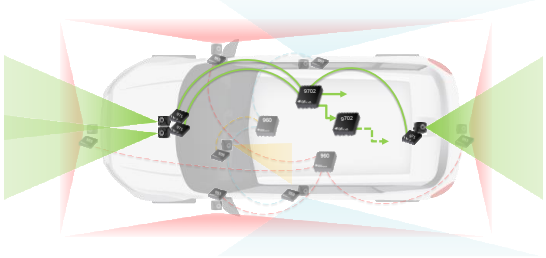

V³Link Industrial
Business lead: Aida Damanpak Rizi

Product families
- General Purpose Display SerDes
- High Performance Camera SerDes (>4Gbps)
- Entry-Level Camera SerDes (≤4Gbps)

Applications
- Building Automation, IPNC
- Medical endoscopes
- Appliances
- Smart stores, Industrial robots

TI Information – NDA Restrictions

FPD-Link Display SerDes

FPD-Link™ Product Line

Santa Clara, CA, USA

Texas Instruments

FPD-Link III

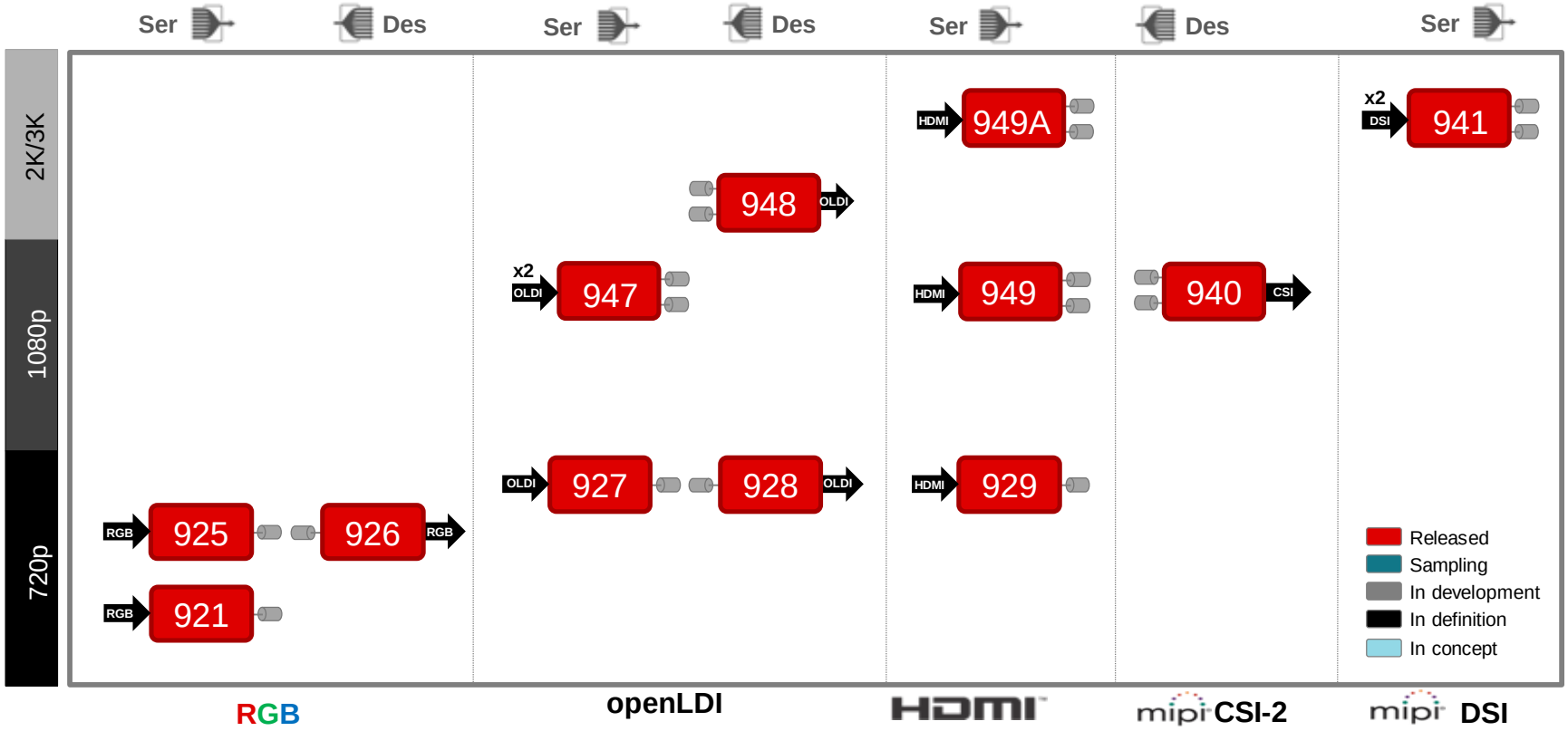
Ser
Des
Ser
Des
Ser
Des
Ser
2K/3K
1080p
720p
x2
DSI
941
HDMI
949A
948
OLDI
x2
OLDI
947
HDMI
949
940
CSI
OLDI
927
928
OLDI
HDMI
929
RGB
925
926
RGB
RGB
921
Released
Sampling
In development
In definition
In concept
RGB
openLDI
HDMI
mipi CSI-2
mipi DSI

FPD-Link IV DSI & oLDI

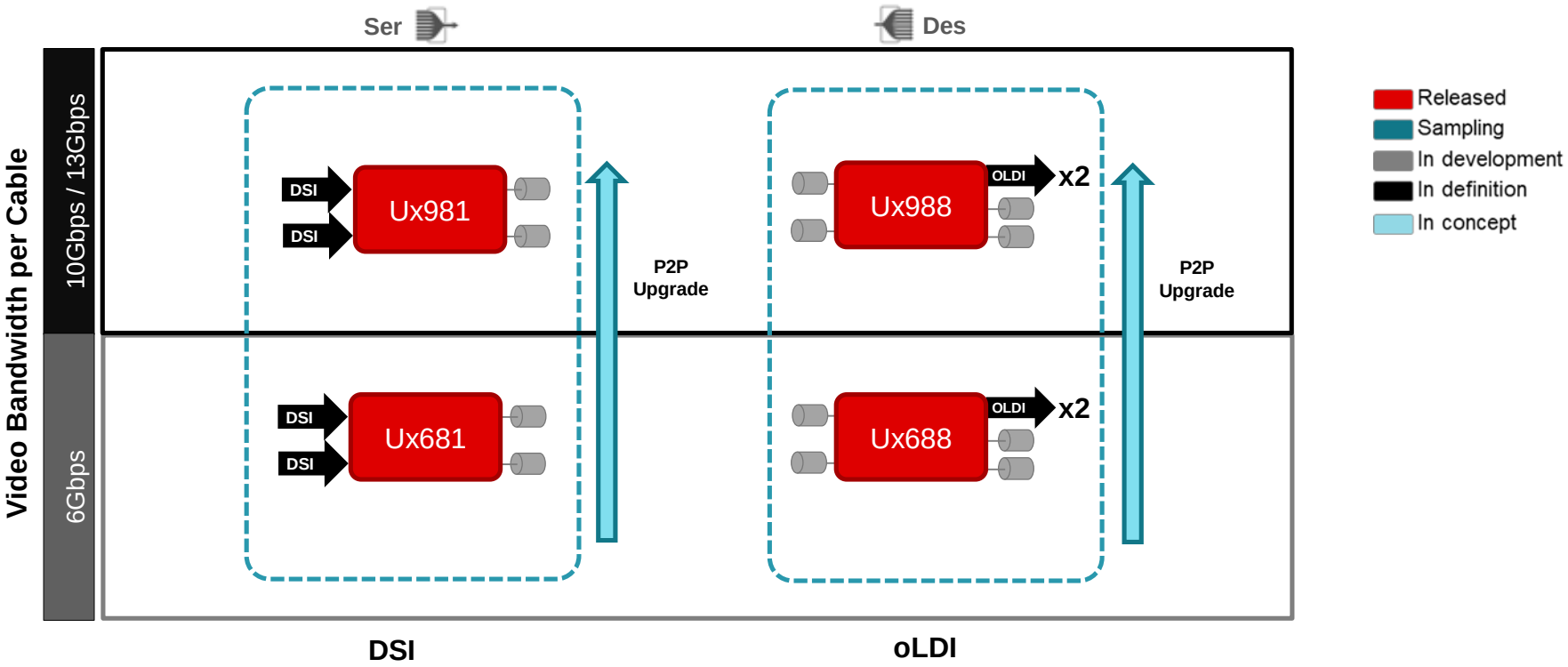

TI Information – NDA Restrictions

FPD-Link IV/V DisplayPort

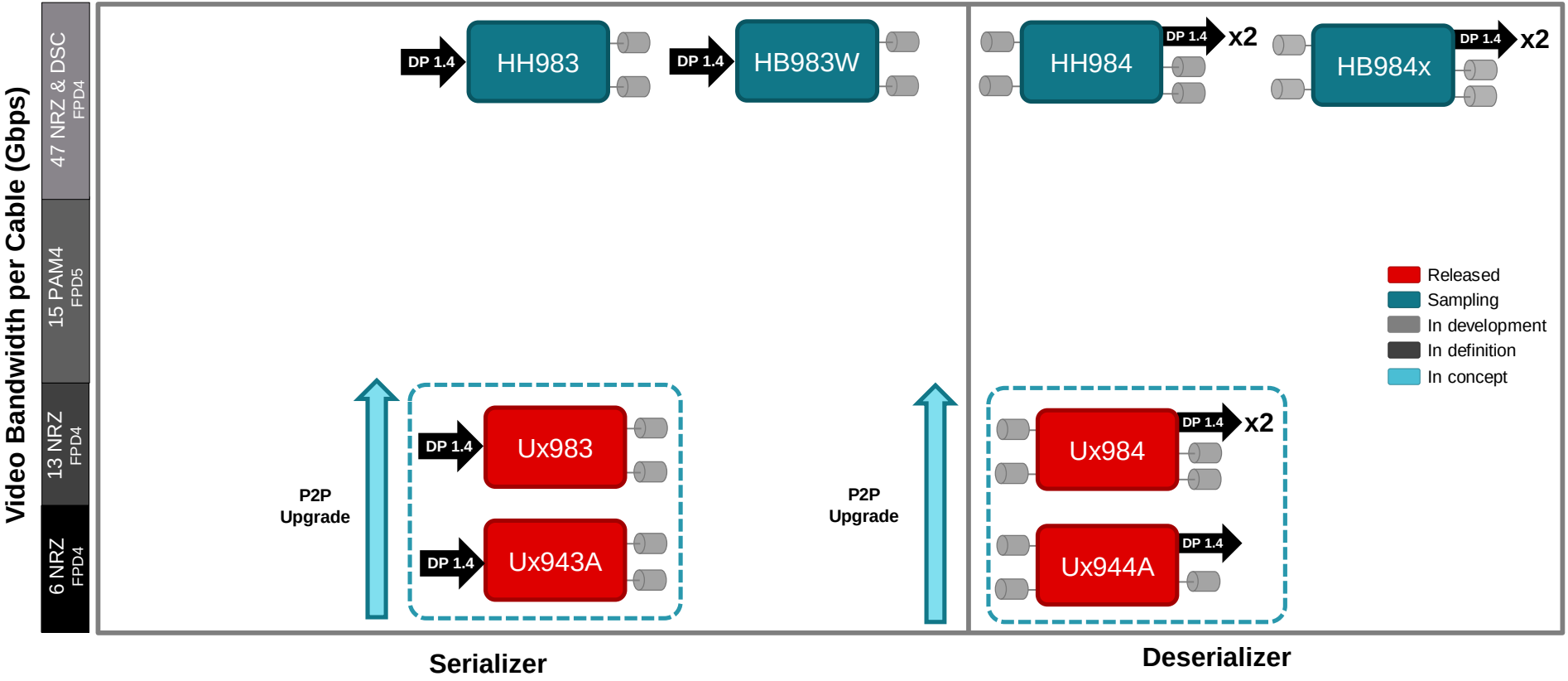

Texas Instruments

DP Display Evolution

Uncompressed Video

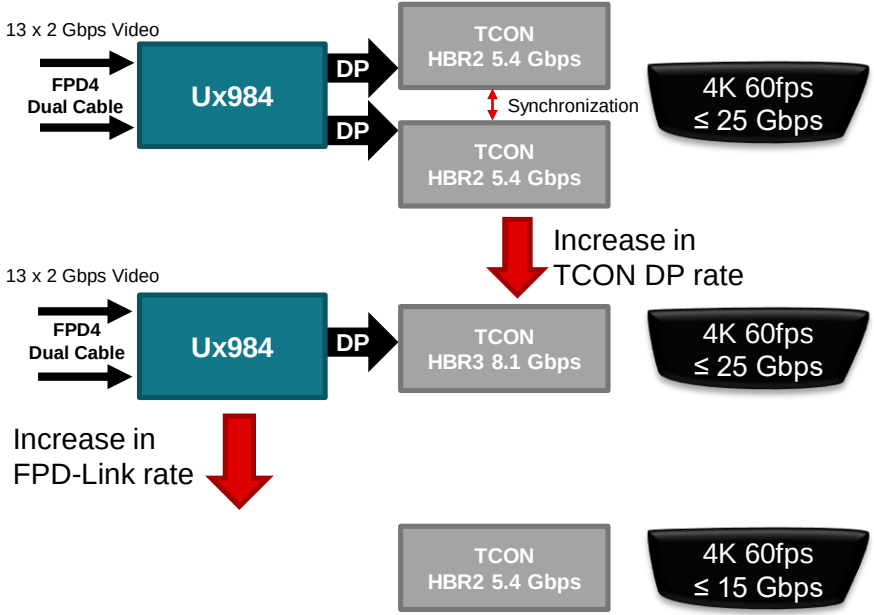

Compressed Video

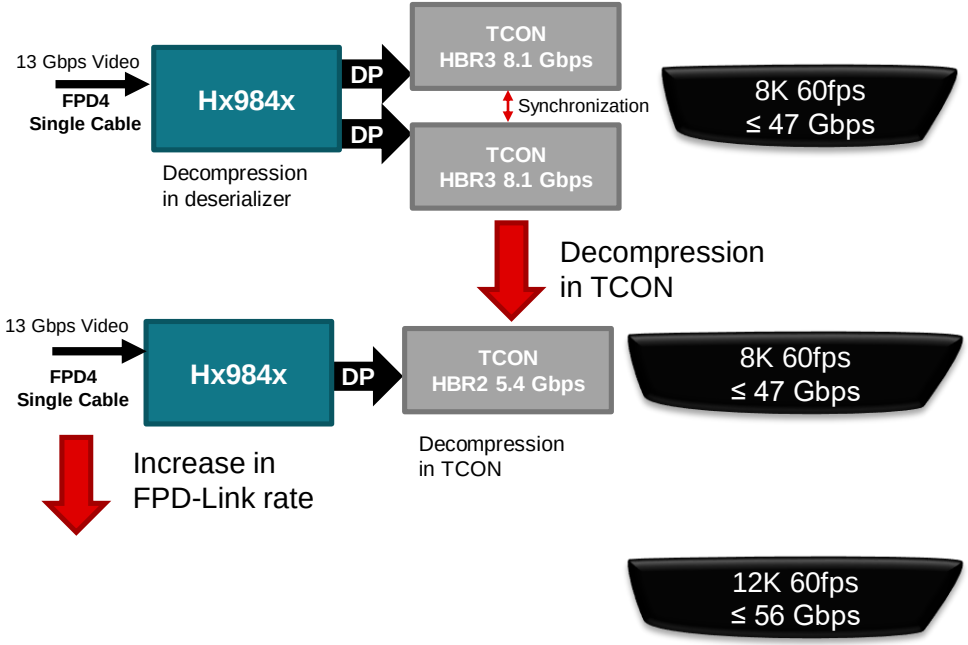

TI Information – NDA Restrictions

HH983 and HH984 Use Cases

Ultra-High Resolution Displays

- Video bandwidth up to 100 Gbps

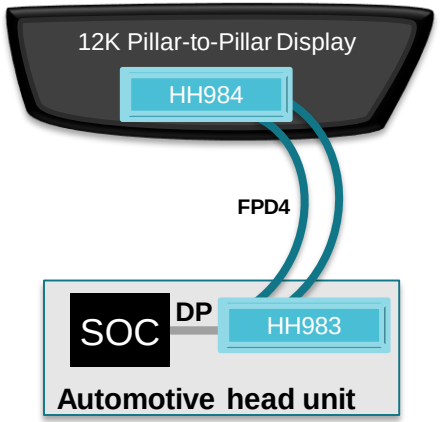

More Bandwidth Across Multiple Displays

- 4K 60Hz 30 bpp over single cable
- Increased cable length or cable cost by reducing bandwidth

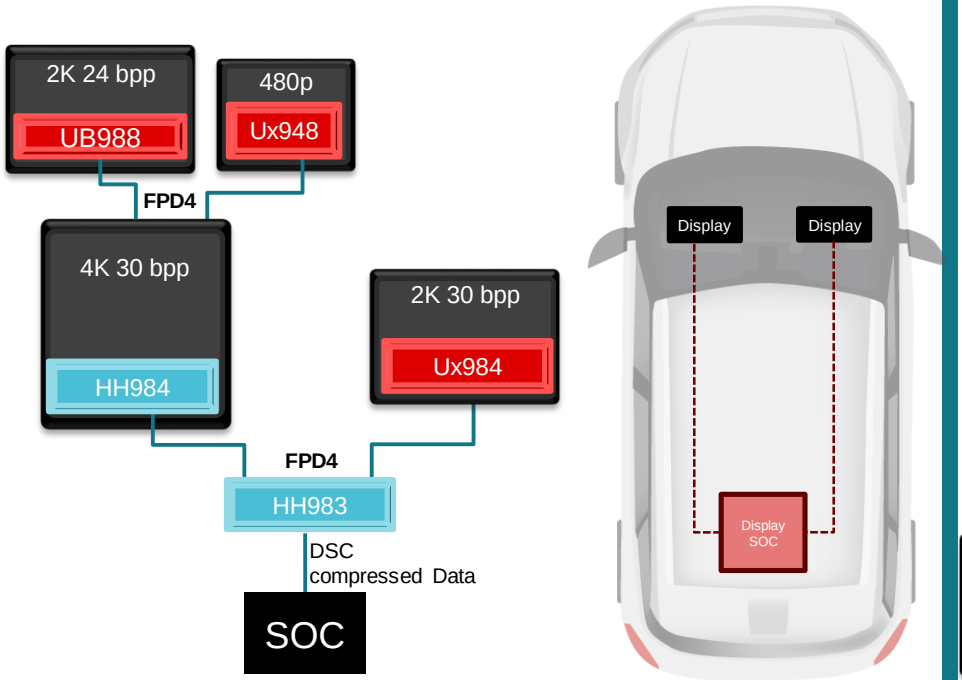

Consumer Input

- HDCP 2.3 and EDID support for consumer input devices like iPhone, Switch, etc.

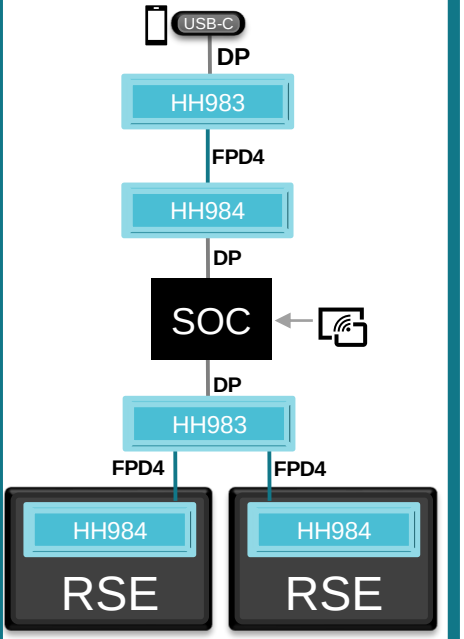

PB4983 and PB1984 Use Cases

More Direct Connection Displays

- 52 Gbps uncompressed video through single serializer
- Longer cable length through PAM4
- Up to 4 direct connect displays for simplicity of design and functional safety analysis

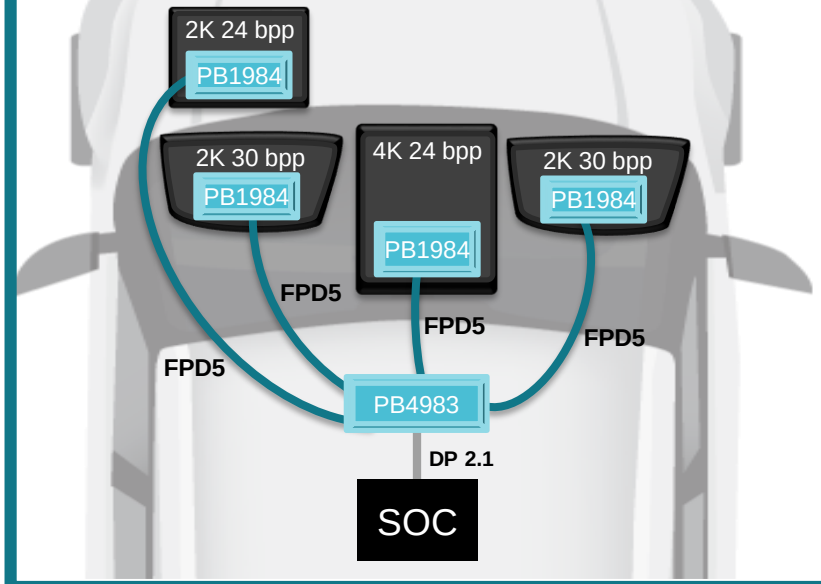

Scalable Support for Displays of all Resolutions through FPD4 & FPD5

- Lower cost and lower power DP displays with 28nm FPD5 devices
- Support for ultra-high resolution 4K to 8K+ with FPD4 devices

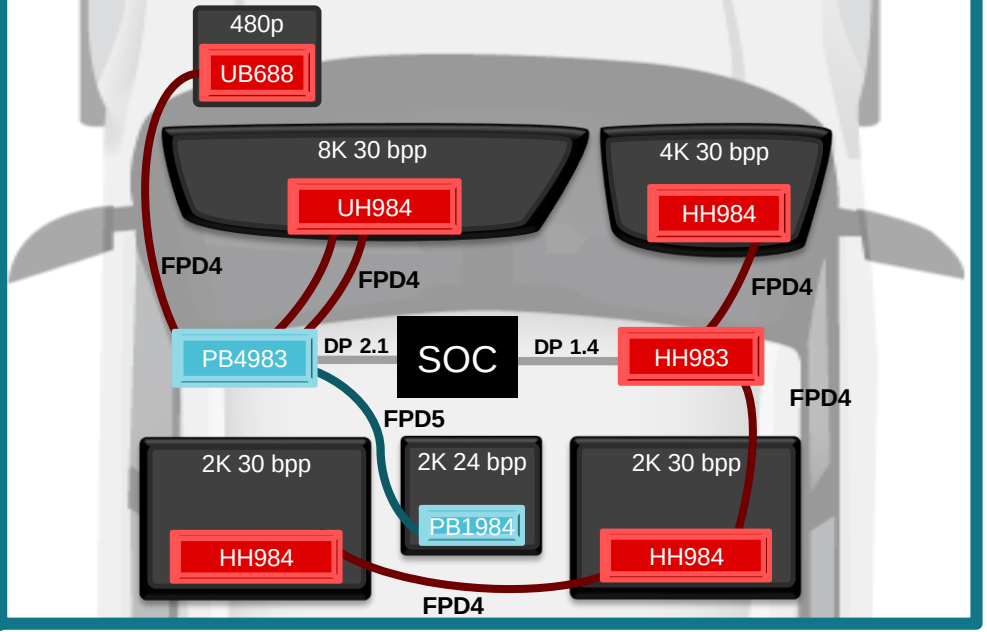

DS90HH983 – 8K eDP/DP → FPD-Link Serializer

Features

8K DP → FPD-Link serializer

- Supports DisplayPort v1.4a up to HBR3 @ 8.1Gbps/lane
- 94 Gbps dual video throughput with 30bit color
- VESA DSC support for 3:1/3.75:1 compressed streams
- 13Gbps uncompressed video per cable
- 47Gbps compressed video throughput per cable
- HDCP v2.3 support when paired with HH984 deserializer
- EDID Support

Daisy-chaining and Splitter configurations

Video networking supported by:

- 4 MST Multi-stream transportation support
- Daisy-chaining support with 98x, 688 or 944A deserializers

Diagnostic functions

- CRC and ECC support
- Embedded voltage and temperature sensors
- Support for ASIL-B at system level

Applications

Automotive Displays

- Central Information Display (CID)
- Rear Seat Entertainment (RSE)
- Digital Instrument Clusters
- Head Units and HMI Modules
- Head Up Display (HUD)
- Rear View & Side Mirror Displays

Sample Availability

- Now

PACKAGE 88-pin QFN

Texas Instruments

DS90HH984 – 8K FPD-Link → eDP/DP Deserializer

Features

8K FPD-Link → eDP/DP deserializer

- Supports Embedded DisplayPort v1.4b up to HBR3 @ 8.1 Gbps/lane
- 2 x eDP/DP local outputs with selectable 1, 2 or 4 lanes each
- 50Gbps uncompressed max DP output throughput
- VESA DSC support for on-chip decompression
- 13Gbps uncompressed video per cable
- 47Gbps compressed video throughput per cable
- HDCP v2.3 support when paired with HH983 serializer

Daisy-chaining and Splitter configurations

Video networking supported by:

- MST Multi-stream transportation support
- Daisy-chaining support when paired with 98x serializers

Diagnostic functions

- CRC and ECC support
- Embedded voltage and temperature sensors
- Support for ASIL-B at system level

Applications

Automotive Displays

- Central Information Display (CID)
- Rear Seat Entertainment (RSE)
- Digital Instrument Clusters
- Head Units and HMI Modules
- Head Up Display (HUD)
- Rear View & Side Mirror Displays

Sample Availability

- Now

PACKAGE 88-pin QFN

Texas Instruments

DS90HB983W – 8K eDP/DP → FPD-Link Serializer

Features

8K DP → FPD-Link serializer

- Supports DisplayPort v1.4a up to HBR3 @ 8.1Gbps/lane
- 94 Gbps dual video throughput with 30bit color
- VESA DSC support for 3:1/3.75:1 compressed streams
- 13Gbps uncompressed video per cable
- 47Gbps compressed video throughput per cable
- DisplayPort and FPD-Link FEC
- EDID Support

Daisy-chaining and Splitter configurations

Video networking supported by:

- 4 MST Multi-stream transportation support
- Daisy-chaining support with Hx98x

Diagnostic functions

- CRC and ECC support
- Embedded voltage and temperature sensors

Applications

Automotive Displays

- Central Information Display (CID)
- Rear Seat Entertainment (RSE)
- Digital Instrument Clusters
- Head Units and HMI Modules
- Head Up Display (HUD)
- Rear View & Side Mirror Displays

Sample Availability

- 2Q25

PACKAGE 88-pin QFN

Texas Instruments

DS90HB984W – 8K FPD-Link → eDP/DP Deserializer

Features

8K FPD-Link → eDP/DP deserializer

- Supports Embedded DisplayPort v1.4b up to HBR3 @ 8.1 Gbps/lane
- 2 x eDP/DP local outputs with selectable 1, 2 or 4 lanes each
- 49Gbps uncompressed max DP output throughput
- VESA DSC
- 13Gbps uncompressed video per cable
- 47Gbps compressed video throughput per cable
- FEC over FPD-Link

Daisy-chaining and Splitter configurations

Video networking supported by:

- MST Multi-stream transportation support
- Daisy-chaining support when paired with Hx98x

Diagnostic functions

- CRC and ECC support
- Embedded voltage and temperature sensors

Applications

Automotive Displays

- Central Information Display (CID)
- Rear Seat Entertainment (RSE)
- Digital Instrument Clusters
- Head Units and HMI Modules
- Head Up Display (HUD)
- Rear View & Side Mirror Displays

Sample Availability

- 1Q25

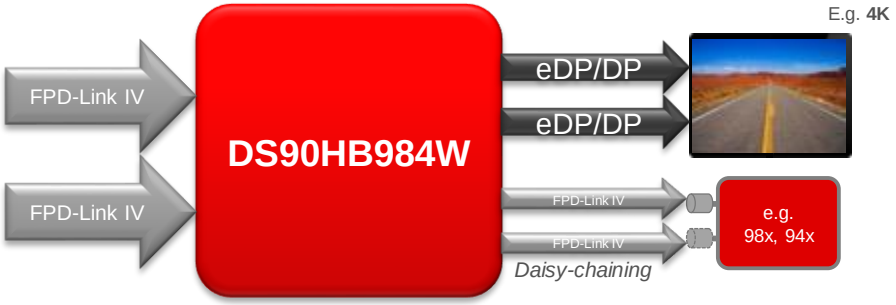

PACKAGE 88-pin QFN

Texas Instruments

FPD-Link IV Roadmap

Use cases

Daisy-chained displays

Point-to-point connection

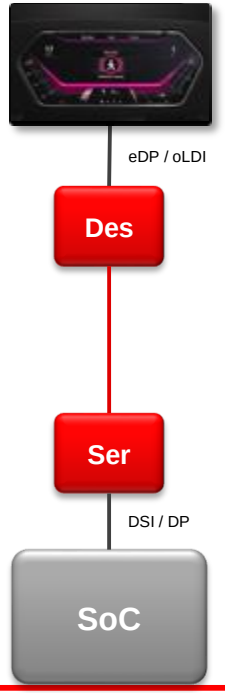

Content duplication

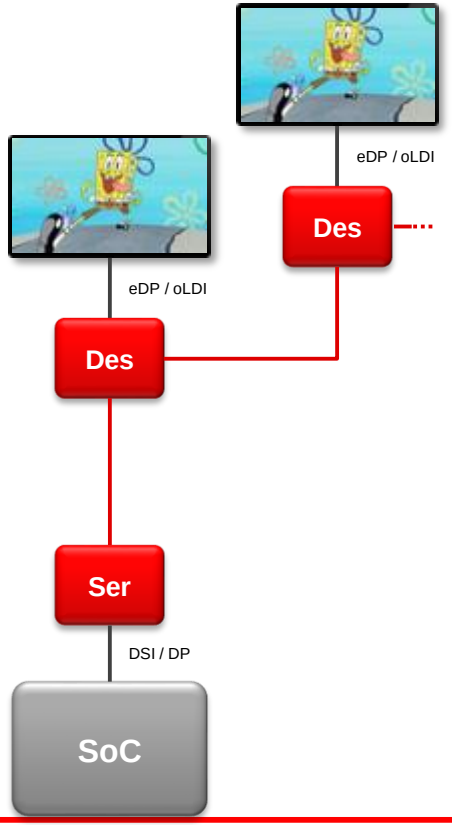

Different content & same resolution

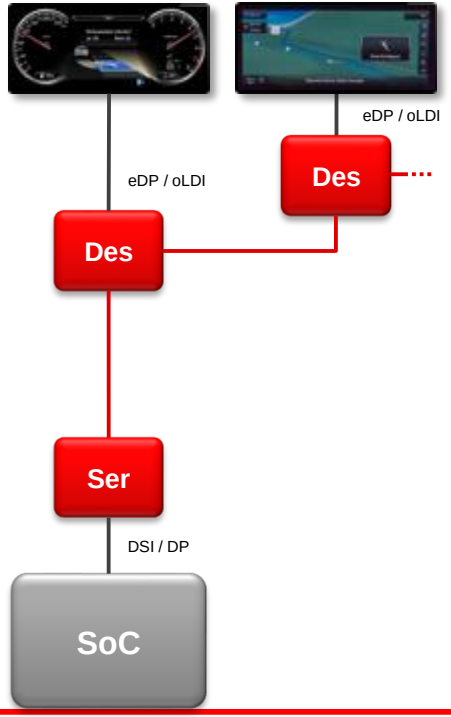

Different content & resolution

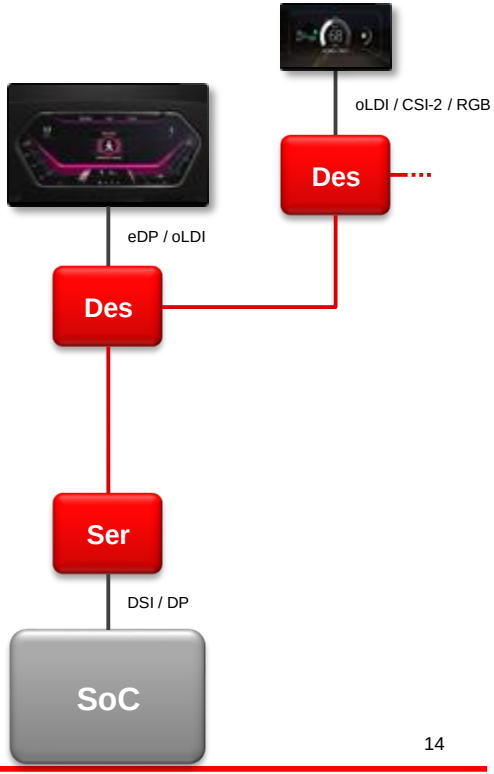

TI Information – NDA Restrictions

Re-architecting the cockpit

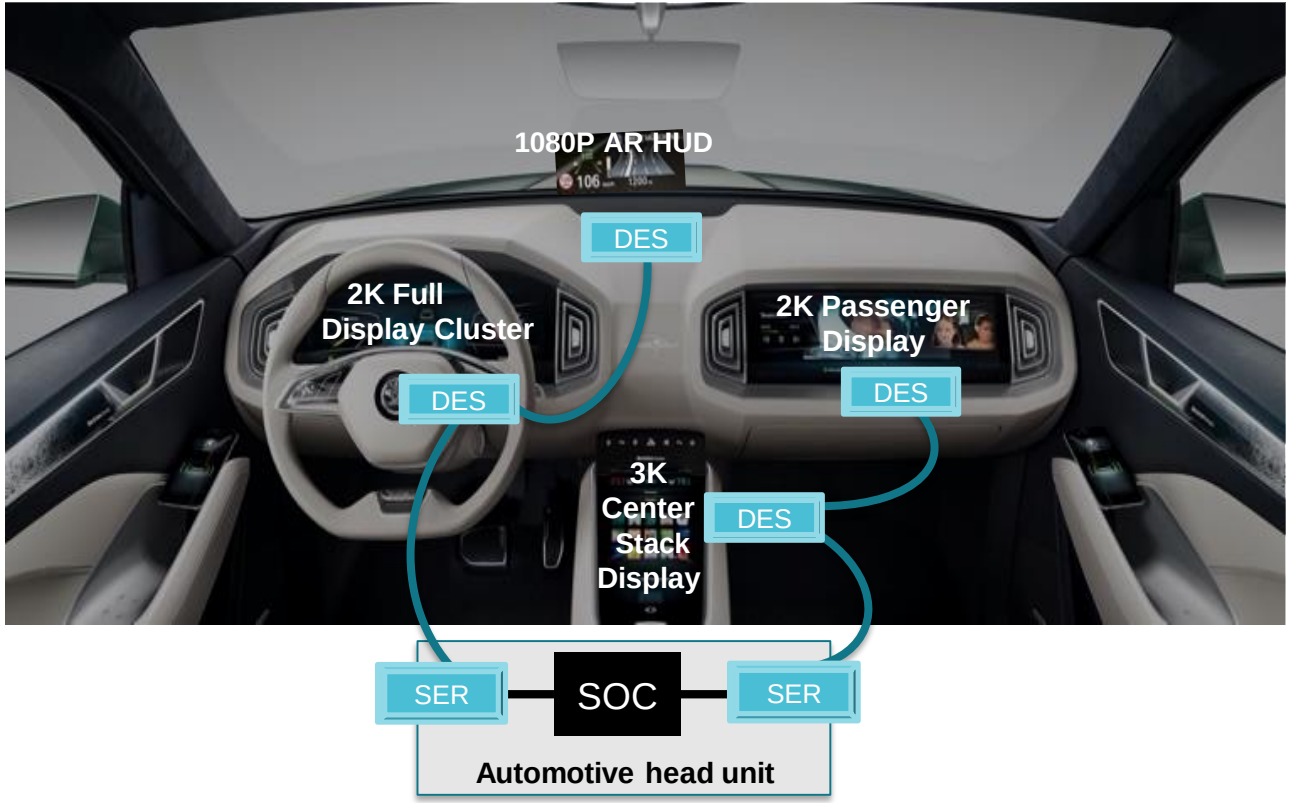

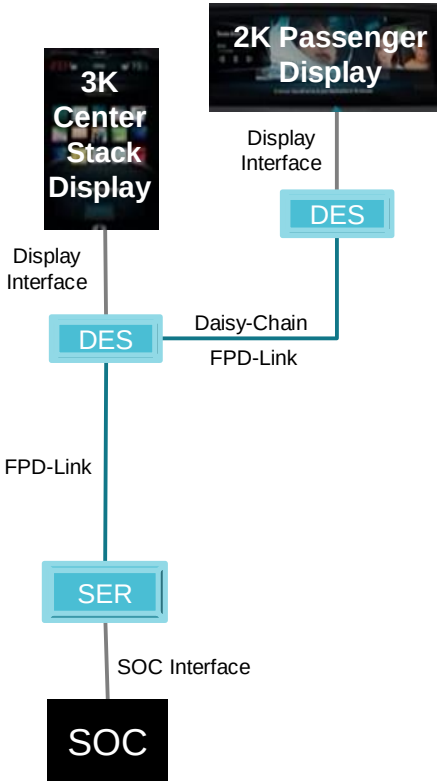

DS90UH981 – 4K DSI → FPD-Link Serializer

Features

4K DSI → FPD-Link serializer

- Supports D-Phy v1.2 @ 2.5 Gbps/lane
- 20Gbps of Video throughput with 24/30 bit color support
- Up to 10.8Gbps NRZ per port (STP or Coax support)

Port Aggregation and Switching

2 x DSI input can be configured as:

- 2 individual video inputs → Aggregator
- 2 individual video inputs → Dual Serializer (cross-point)

Daisy-chaining and Splitter configurations

Video networking supported by:

- Super-frame support for symmetric and asymmetric splitting
- DSI Virtual channel support
- With 98x De-serializer, can support Daisy-chaining

Multi protocol compatibility

- Backwards compatibility with FPD-Link III deserializers
- Same pin-out as 941AS; provides easy upgrade path to 4K
- Enables bridging function from DSI to oLDI/MIPI-CSI/DP/eDP when paired with FPD-Link III/IV deserializers

Applications

Automotive Displays

- Central Information Display (CID)
- Rear Seat Entertainment (RSE)
- Digital Instrument Clusters
- Head Units and HMI Modules
- Head Up Display (HUD)
- Rear View & Side Mirror Displays

PACKAGE 64-pin QFN

Texas Instruments

DS90UH983 – 5K DP → FPD-Link Serializer

Features

5K DP → FPD-Link serializer

- Supports Display Port1.4b HBR3 @ 8.1 Gbps/lane
- Supports DP/eDP
- 25.9Gbps of Video throughput with 24/30 bit color support per DP
- HDCP1.4b support when paired with FPD-Link 3 de-serializer
- Up to 13.5Gbps NRZ per port (STP or Coax support)

Daisy-chaining and Splitter configurations

Video networking supported by:

- Super-frame support for symmetric and asymmetric splitting
- 2 MST Multi-stream transportation support
- With 98x deserializer, can support Daisy-chaining

Multi protocol compatibility

- Backwards compatibility with FPD-Link III deserializers
- Enables bridging function from DP/eDP to oLDI/MIPI-CSI/DP/eDP when paired with FPD-Link III/IV deserializers

Diagnostic functions

- CRC and ECC support
- Embedded voltage and temperature sensors
- Support for ASIL-B at system level

Applications

Automotive Displays

- Central Information Display (CID)
- Rear Seat Entertainment (RSE)
- Digital Instrument Clusters
- Head Units and HMI Modules
- Head Up Display (HUD)
- Rear View & Side Mirror Displays

PACKAGE 64-pin QFN

Texas Instruments

DS90UH984 – 5K FPD-Link → eDP/DP Deserializer

Features

5K FPD-Link → eDP/DP deserializer

- Supports Display Port1.4b HBR3/HBR2/HBR/RBR up to 8.1 Gbps/lane
- 2 x eDP/DP main link with selectable 1, 2 or 4 lanes each
- 25.9Gbps of Video throughput with 24/30 bit color support per DP
- Up to 13.5Gbps NRZ per FPD IV port (STP or Coax support)
- HDCP1.4b support when paired with FPD-Link III deserializer

Daisy-chaining and Splitter configurations

Video networking supported by:

- Super-frame support for symmetric and asymmetric splitting
- 2 MST Multi-stream transportation support
- Daisy-chaining support

Multi protocol compatibility

- Backwards compatibility with FPD-Link III serializers
- Backwards compatibility with FPD Link III deserializers

Diagnostic functions

- CRC and ECC support
- Embedded voltage and temperature sensors
- Support for ASIL-B at system level

Applications

Automotive Displays

- Central Information Display (CID)
- Rear Seat Entertainment (RSE)
- Digital Instrument Clusters
- Head Units and HMI Modules
- Head Up Display (HUD)
- Rear View & Side Mirror Displays

PACKAGE 88-pin QFN

Texas Instruments

DS90UH988 – 5K FPD-Link → oLDI Deserializer

Features

5K FPD-Link → oLDI deserializer

- Supports 2x oLDI at 210MHz PCLK
- oLDI/RGB protocol support (Strap selectable)
- 25.9Gbps of Video throughput with 24/30 bit color support
- Upto 13.5Gbps NRZ per port (STP or Coax support)
- HDCP1.4b support when paired with FPD-Link III serializer

Daisy-chaining and Splitter configurations

Video networking supported by:

- Super-frame support for symmetric and asymmetric splitting
- 2 MST Multi-stream transportation support
- Daisy-chaining support

Multi protocol compatibility

- Backwards compatibility with FPD-Link III serializers
- Backwards compatibility with FPD Link III deserializers

Diagnostic functions

- CRC and ECC support
- Embedded voltage and temperature sensors
- Support for ASIL-B at system level

Applications

Automotive Displays

- Central Information Display (CID)
- Rear Seat Entertainment (RSE)
- Digital Instrument Clusters
- Head Units and HMI Modules
- Head Up Display (HUD)
- Rear View & Side Mirror Displays

PACKAGE 88-pin QFN

Texas Instruments

DS90UB681 – 2K DSI → FPD-Link Serializer

Features

2K DSI → FPD-Link serializer

- Supports DPHY @ 1.5 Gbps/lane
- 6.75 Gbps NRZ data rate on a single cable
- 6 Gbps video throughput/port
- Coax or STP cable support

Networking

Video networking supported by:

- Super-frame support
- DSI Virtual channel support

Compatibility

- Full compatibility with FPD-Link III up to 3.675 Gbps
- Compatibility with FPD-Link IV up to 6.75 Gbps
- Pin-Pin compatible to 941AS and 981
- Allows easy upgrade path to 4K
- Enables bridging function from DSI to oLDI/MIPI-CSI/DP/eDP when paired with FPD-Link deserializers

Applications

Automotive Infotainment:

- Central Information Display (CID)
- Rear Seat Entertainment (RSE)
- Digital Instrument Clusters
- Head Units and HMI Modules
- Head Up Display (HUD)

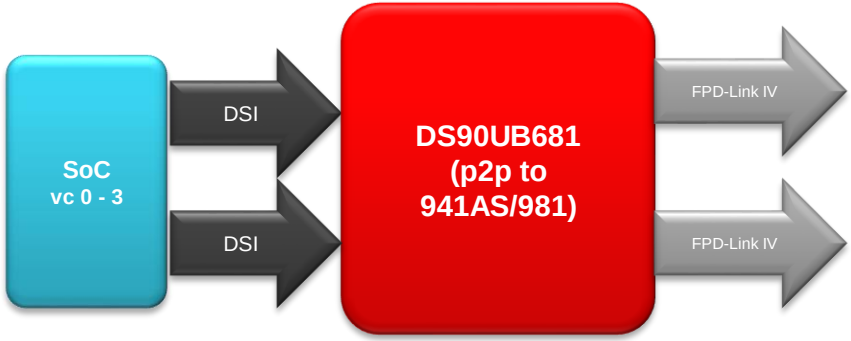

Texas Instruments

DS90UB688 – 2K FPD-Link → oLDI Deserializer

Features

2K FPD-Link → oLDI deserializer

- Supports 2x oLDI at 105 MHz PCLK
- RGB Support
- 6.75 Gbps NRZ data rate per cable
- Daisy-chain output at 3.375Gbps per cable
- STP or Coax cable support

Compatibility

- Full compatibility with FPD-Link III up to 3.675 Gbps
- Compatibility with FPD-Link IV up to 6.75 Gbps
- Pin-Pin compatible to 988
- Allows easy upgrade path to 4K
- Enables bridging function from RGB/MIPI-DSI/DP/eDP when paired with FPD-Link serializers

Diagnostic functions

- CRC support
- Embedded voltage and temperature sensors
- Cable fault detection

Applications

Automotive Infotainment:

- Central Information Display (CID)
- Rear Seat Entertainment (RSE)
- Digital Instrument Clusters
- Head Units and HMI Modules
- Head Up Display (HUD)

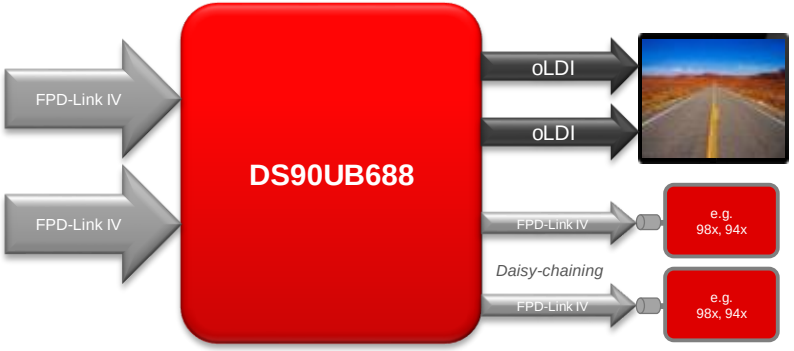

Texas Instruments

FPD-Link™ Camera SerDes

FPD-Link™ Product Line

Santa Clara, CA, USA

DS90UB971 – 7.55Gbps FPD-Link Serializer

Features

7.55Gbps FPD-Link serializer

- Supports D-PHY v2.1 @ 1.5 Gbps/lane
- 6Gbps of video throughput
- FPD-Link IV output up to 7.55Gbps NRZ (STP or Coax support)
- I2C control channel

Diagnostic functions

- CRC and ECC support
- Embedded voltage and temperature sensors
- Cable fault detection
- Unique Die-ID for counterfeit protection
- Developed to ISO 26262 spec, targeting ASIL-B

Compatibility

- Full backwards compatibility with 936, 954, 962 and 960 products
- Pin-to-pin compatible to 935, 953, 953A and 951
- Grand master clock synchronization – Sensor synchronization

AEC-Q Grade Automotive Qualified

- Rated to 115degC ambient
- AEC-Q Grade 2 qualified

Applications

Automotive Sensors:

- Surround View Systems (SVS)
- Forward Vision Cameras (FC)
- Time-of-Flight (ToF) Sensors
- Auto RADAR/LIDAR
- Side Mirror Displays

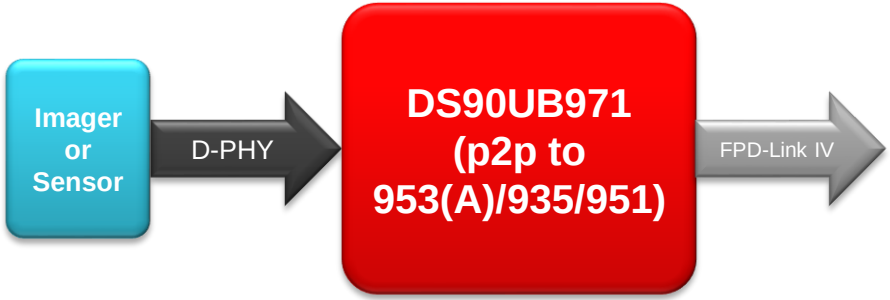

PACKAGE 32-pin QFN

Texas Instruments

DS90UB9702 – 7.55Gbps FPD-Link Deserializer Hub

Features

7.55Gbps FPD-Link deserializer hub

- 4x FPD IV inputs up to 7.55Gbps NRZ (STP or Coax support)
- Supports D-PHY v2.1 @ 2.5 Gbps/lane
- 2x Independent D-PHY ports and one replicate-only port
- 20Gbps of aggregated video throughput
- 30Gbps of video throughput using replication
- 4x CML outputs for off-board processing

Diagnostic functions

- CRC and ECC support
- Embedded voltage and temperature sensors
- Cable fault detection
- Unique Die-ID for counterfeit protection
- Support for ASIL-B at system level

Compatibility

- Full backwards compatibility with FPD-Link III product family
- Cross-compatible with FPD-Link IV 981 serializer
- Grand master clock synchronization – Sensor synchronization

AEC-Q Grade Automotive Qualified

- Rated to 105degC ambient
- AEC-Q Grade 2 qualified

Applications

Automotive Sensors:

- Surround View Systems (SVS)
- Forward Vision Cameras (FC)
- Time-of-Flight (ToF) Sensors
- Auto RADAR/LIDAR
- Side Mirror Displays

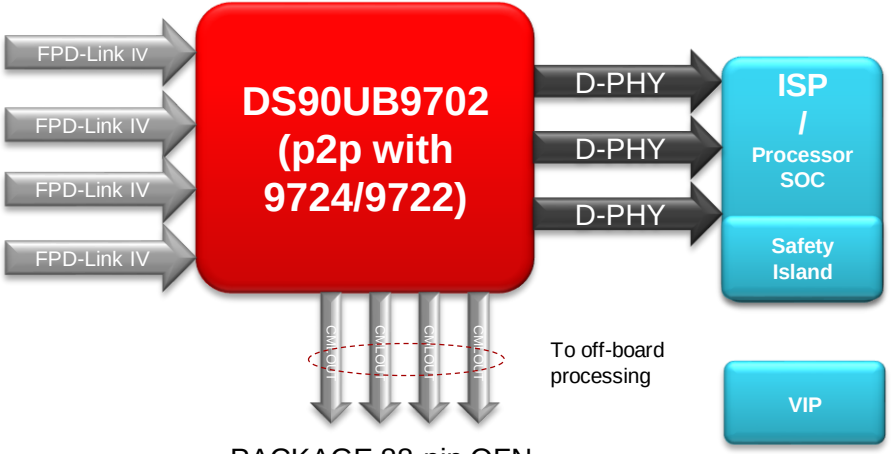

PACKAGE 88-pin QFN

Texas Instruments

DS90UB9722 – 7.55Gbps FPD-Link Dual Deserializer

Features

7.55Gbps FPD-Link dual deserializer

- 2x FPD IV inputs up to 7.55Gbps NRZ (STP or Coax support)
- Supports D-PHY v2.1 @ 2.5 Gbps/lane
- 2x Independent D-PHY ports
- 20Gbps of aggregated video throughput
- 2x CML outputs for off-board processing

Diagnostic functions

- CRC and ECC support
- Embedded voltage and temperature sensors
- Cable fault detection
- Unique Die-ID for counterfeit protection
- Support for ASIL-B at system level

Compatibility

- Full backwards compatibility with FPD-Link III product family
- Grand master clock synchronization – Sensor synchronization
- Cross-compatible with FPD-Link IV 981 serializer
- 9722 is pin-to-pin compatible with 9702/9724

AEC-Q Grade Automotive Qualified

- Rated to 105degC ambient
- AEC-Q Grade 2 qualified

Applications

Automotive Sensors:

- Surround View Systems (SVS)
- Forward Vision Cameras (FC)
- Time-of-Flight (ToF) Sensors
- Auto RADAR/LIDAR
- Side Mirror Displays

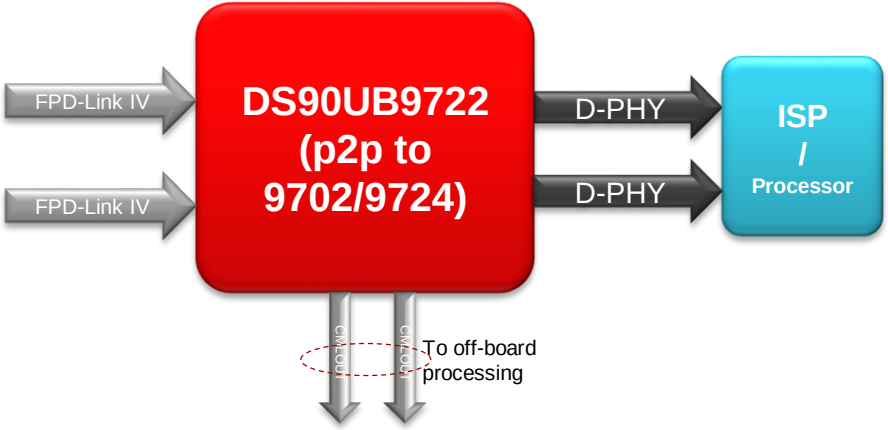

PACKAGE 88-pin QFN

Texas Instruments

DS90UB9724 – 7.55Gbps FPD-Link Quad Deserializer

Features

7.55Gbps FPD-Link deserializer hub

- 4x FPD IV inputs up to 7.55Gbps (STP or Coax support)
- Supports D-PHY v2.1 @ 2.5 Gbps/lane (10 Gbps/port)
- **Supports C-PHY v1.1 @ 5.7 Gbps/trio (22.8 Gbps/port)**
- 2x Independent C-PHY/D-PHY ports + 1x Replicate port
- 4x CMLOUTs for off-board processing
- Each CSI-2 port supports 2x2 lanes/trios replication mode

Diagnostic functions

- CRC and ECC support
- Embedded voltage and temperature sensors
- Cable fault detection
- Unique Die-ID for counterfeit protection
- System level ASIL-B support

Compatibility

- Backwards compatible with FPD-Link III product family
- Cross-compatible with FPD-Link IV 981 serializer
- Grand master clock synchronization – Sensor synchronization

AEC-Q Grade Automotive Qualified

- Rated to 105degC ambient
- AEC-Q Grade 2 qualified

Applications

Automotive Sensors:

- Highly Assisted Driving (HAD) systems
- Surround View Systems (SVS)
- Forward Vision Cameras (FC)
- Time-of-Flight (ToF) Sensors
- Auto RADAR/LIDAR
- Side Mirror Displays

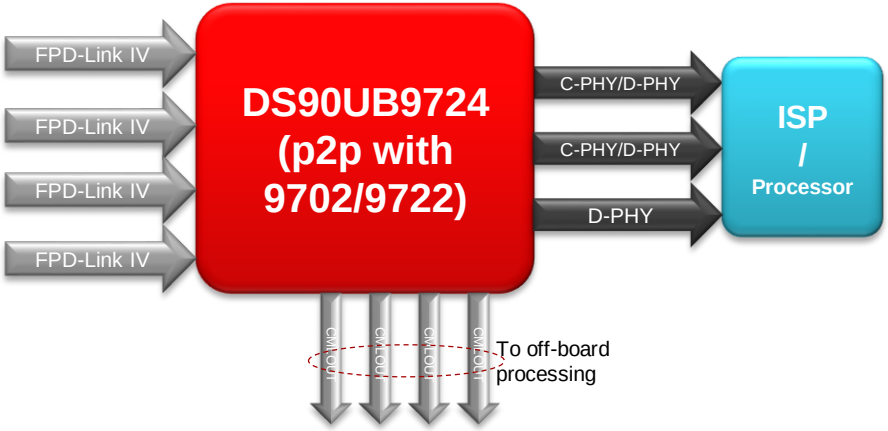

PACKAGE 88-pin QFN

Texas Instruments

DS90UB9742 – 7.55Gbps FPD-Link Dual Deserializer

Features

7.55Gbps FPD-Link Dual Deserializer hub

- 2x FPD IV inputs up to 7.55Gbps (STP or Coax support)
- Supports D-PHY v2.1 @ 2.5 Gbps/lane (10 Gbps/port)
- **Supports C-PHY v1.1 @ 5.7 Gbps/trio (22.8 Gbps/port)**
- 2x Independent C-PHY/D-PHY ports
- 2x CMLOUTs for off-board processing
- Each CSI-2 port supports 2x2 lanes/trios replication mode

Diagnostic functions

- CRC and ECC support
- Embedded voltage and temperature sensors
- Cable fault detection
- Unique Die-ID for counterfeit protection
- System level ASIL-B support

Compatibility

- Backwards compatible with FPD-Link III product family
- Cross-compatible with FPD-Link IV 981 serializer
- Grand master clock synchronization – Sensor synchronization

AEC-Q Grade Automotive Qualified

- Rated to 105degC ambient
- AEC-Q Grade 2 qualified

Applications

Automotive Sensors:

- Highly Assisted Driving (HAD) systems
- Surround View Systems (SVS)
- Forward Vision Cameras (FC)
- Time-of-Flight (ToF) Sensors
- Auto RADAR/LIDAR
- Side Mirror Displays

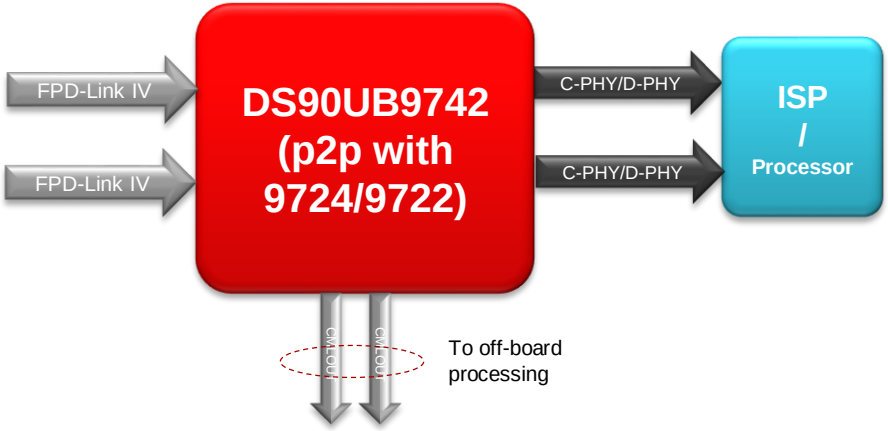

PACKAGE 88-pin QFN

Texas Instruments

FPD-Link III Low-cost Roadmap

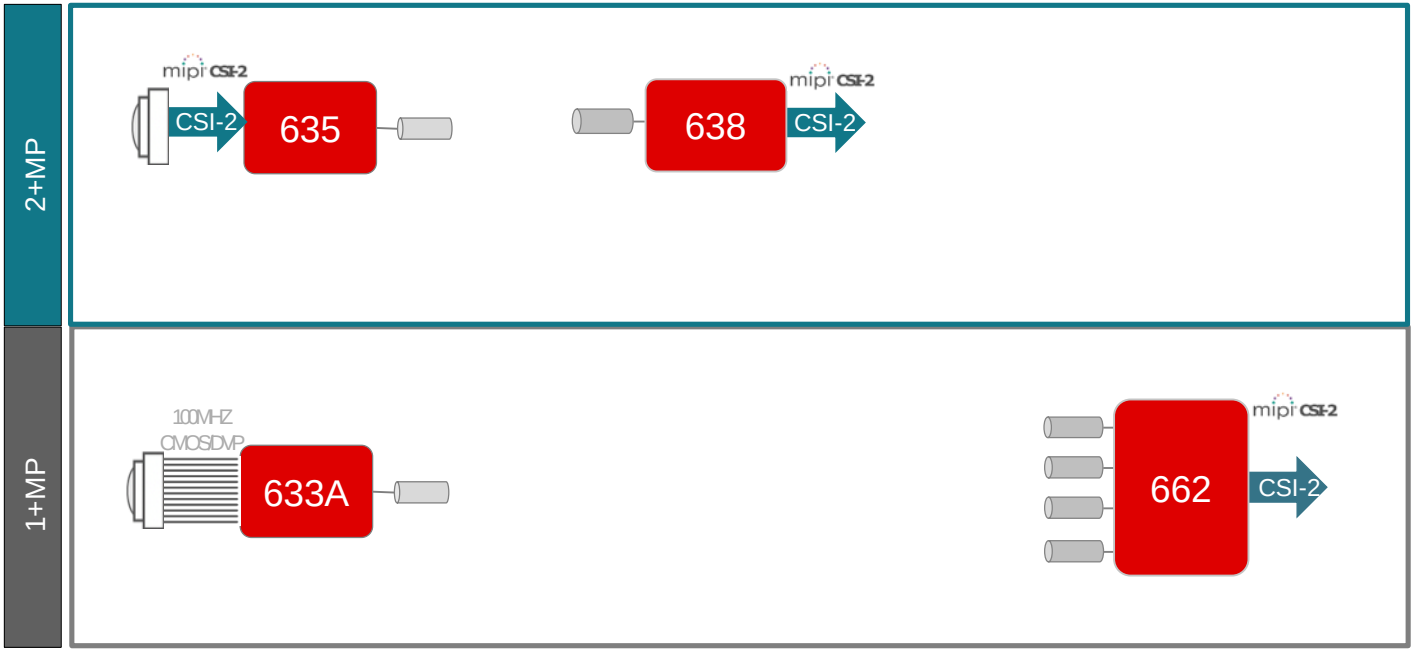

Released
Sampling
In development
In definition
In concept

** 6xx devices are Inter-operable only with each other

TI Information – NDA Restrictions

DS90UB633A – 1Mpix FPD-Link Serializer

Features

56.25-100MHz PCLK with Coax and STP

- Supports 8 bit/10 bit video from 75-100MHz
- Supports 12 bit video from 56.25-100MHz
- Low latency Bi-directional control channel with GPIO and I2C support
- PoC support

Diagnostic functions

- CRC and Parity support
- Built-in Self Test (BIST)
- Cable fault detection

Compatibility

- Foot-print & P2P compatible to DS90UB913A and DS90UB933
- Inter-operable only with 662 deserializer devices

AEC-Q Grade Automotive Qualified

- Rated to 105degC ambient
- AEC-Q Grade 2 qualified

Applications

Automotive Sensors:

- Surround View Systems (SVS)
- Forward Vision Cameras (FC)
- Time-of-Flight (ToF) Sensors
- Auto RADAR/LIDAR
- Side Mirror Displays

PACKAGE 32-pin QFN

Texas Instruments

DS90UB662 – 1Mpix FPD-Link Quad Hub

Features

1MP FPD-Link Deserializer Hub with Single CSI-2 Output Port

- Supports 1Mpix Sensors at 30Hz/60Hz frame rate
- Supports D-PHY v1.2 @ 1.6 Gbps/lane
- Low latency Bi-directional control channel with GPIO and I2C support
- PoC support

Diagnostic functions

- CRC and Parity support
- Built-in Self Test (BIST)
- Cable fault detection

Compatibility

- Foot-print & P2P compatible to DS90UB960 , DS90UB962 and DS90UB964
- Inter-operable only with 633A serializer devices

AEC-Q Grade Automotive Qualified

- Rated to 105degC ambient
- AEC-Q Grade 2 qualified

Applications

- **Automotive:**
  - Surround View Systems (SVS)
  - Rear and Front View Camera
  - Driver Monitor Cameras (DMS)
  - Remote Satellite RADAR Sensors
- **Security and Surveillance**
- **Industrial Machine Vision**

PACKAGE 64-pin QFN

Texas Instruments

DS90UB635 – 4.16Gbps FPD-Link Serializer

Features

4.16Gbps FPD-Link serializer

- Supports D-PHYv1.2 (from 600Mbps – 832Mbps/lane)
- 2.4Gbps to 3.328Gbps of video throughput
- FPD-Link III output up to 4.16Gbps NRZ (STP or Coax support)
- I2C control channel

Diagnostic functions

- CRC and ECC support
- Embedded voltage and temperature sensors
- BIST and Pattern Generation support
- Unique Die-ID for counterfeit protection
- Support for ASIL-B at system level

Compatibility

- Compatible with DS90UB638 Deserializer and DS90UB662 Hub
- Pin-to-pin compatible to 935, 953, 953A and 951
- Grand master clock synchronization – Sensor synchronization

AEC-Q Grade Automotive Qualified

- Rated to 105degC ambient
- AEC-Q Grade 2 qualified

Applications

Automotive Sensors:

- Surround View Systems (SVS)
- Forward Vision Cameras (FC)
- Driver-Monitoring Systems (DMS)
- Auto RADAR/LIDAR
- Side Mirror Displays

PACKAGE 32-pin QFN (5x5)

Texas Instruments

DS90UB638 – 4.16Gbps FPD-Link Deserializer

Features

4.16Gbps FPD-Link deserializer

- Supports D-PHYv1.2 (up to 1.6Gbps/lane)
- Supports up to 3.328Gbps of video throughput
- Single FPD-Link III input up to 4.16Gbps NRZ (STP or Coax support)
- I2C control channel

Diagnostic functions

- CRC and ECC support
- Embedded voltage and temperature sensors
- BIST and Pattern Generation Support
- Unique Die-ID for counterfeit protection
- Support for ASIL-B at system level

Compatibility

- Compatible with DS90UB635 and DS90UB633A Serializers
- Pin-to-pin compatible to 936, 954, and 958
- Grand master clock synchronization – Sensor synchronization

AEC-Q Grade Automotive Qualified

- Rated to 105degC ambient
- AEC-Q Grade 2 qualified

Applications

Automotive Sensors:

- Surround View Systems (SVS)
- Forward Vision Cameras (FC)
- Driver-Monitoring Systems (DMS)
- Auto RADAR/LIDAR
- Side Mirror Displays

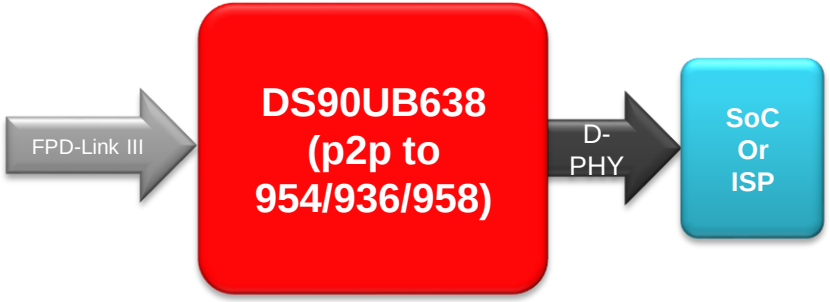

PACKAGE 48-pin QFN (7x7)

Texas Instruments

FPD-Link IV & V ADAS

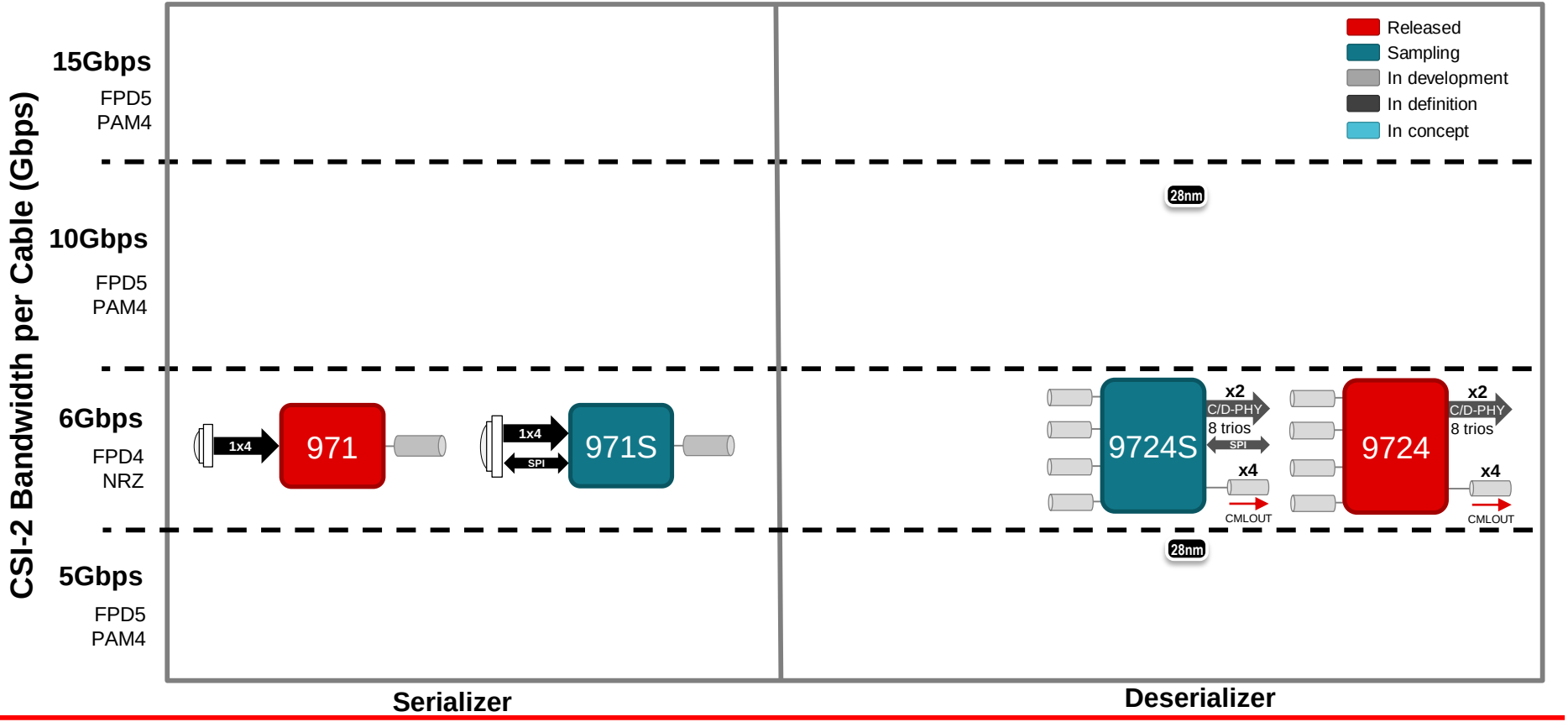

Texas Instruments

ADAS FPD-Link IV & V Use Cases

Flexible Applications:

- 10Gbps link with FPD-Link V for module-to-module forwarding and 12MP+ cameras
- Mixed C/D-PHY output on 6724

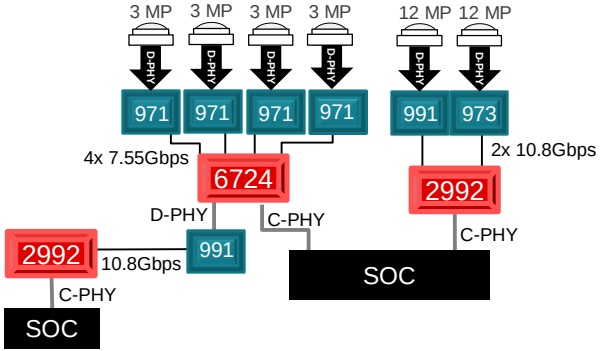

FPD-Link IV Enhancements:

- 971/9724S enable SPI and extra GPIO

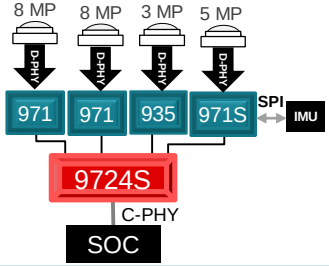

Zonal Aggregation:

- Lower cost and power from 28nm
- Scalable serializer from 1 MP to 12 MP
- Longer cable lengths with PAM4
- Aggregating ser for multi-sensor modules
- SPI support

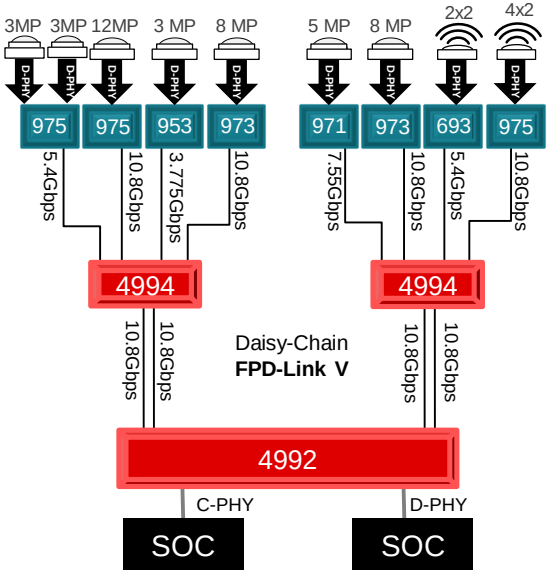

High Bandwidth:

- 15Gbps link for 12MP+ cameras and high bandwidth module-to-module forwarding
- Reduce cables through multi-sensor modules
- C-PHY serializer for higher bandwidth per pin

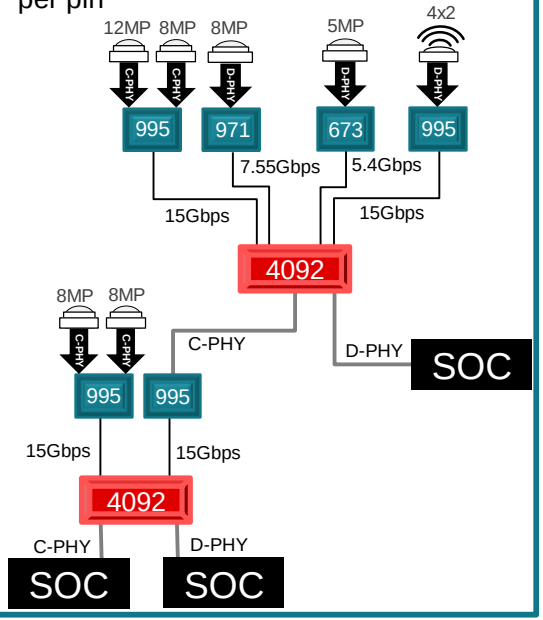

FPD-Link III

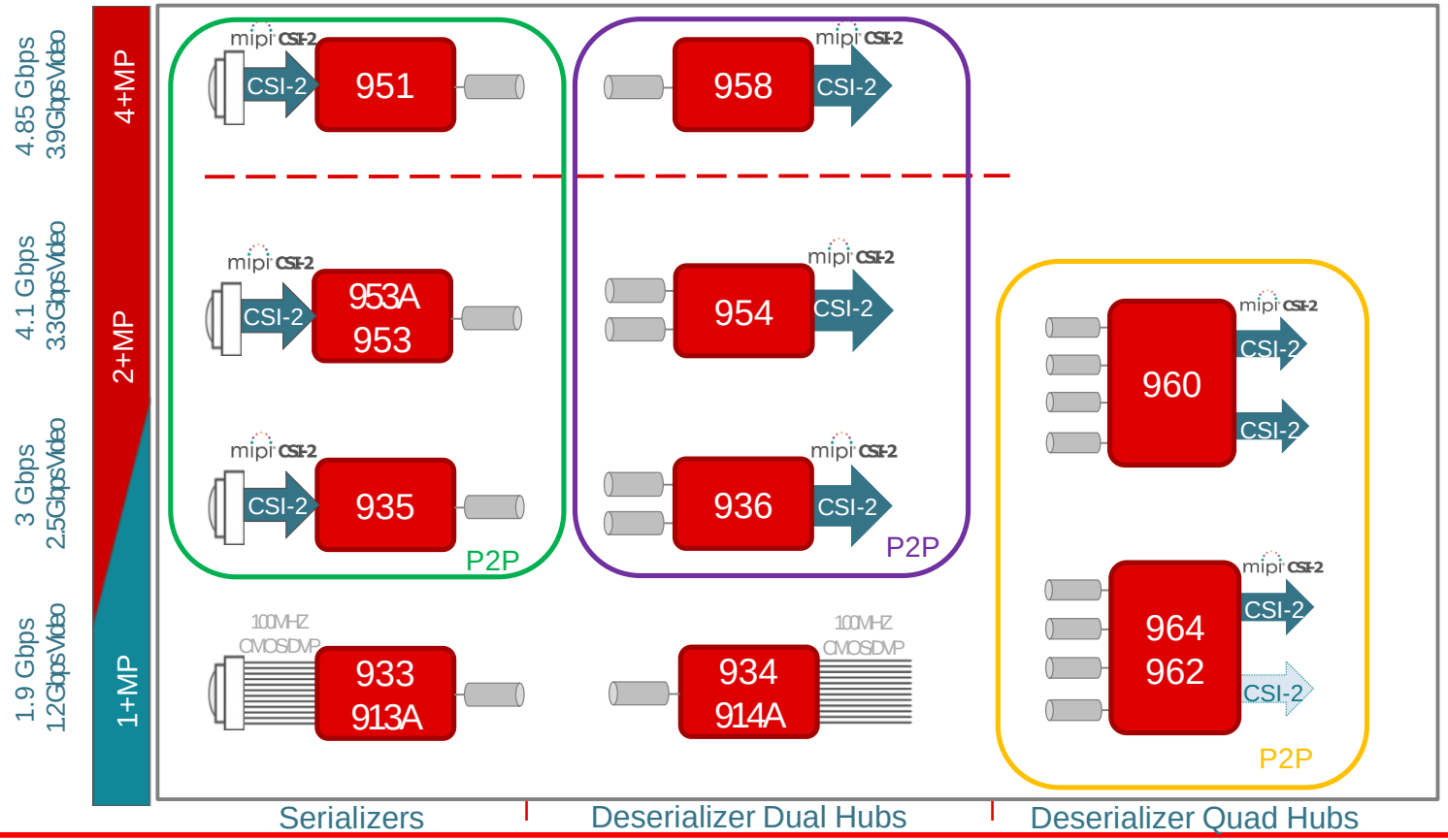

- Released
- Sampling
- In development
- In definition
- In concept

TI Information – NDA Restrictions

FPD-Link IV

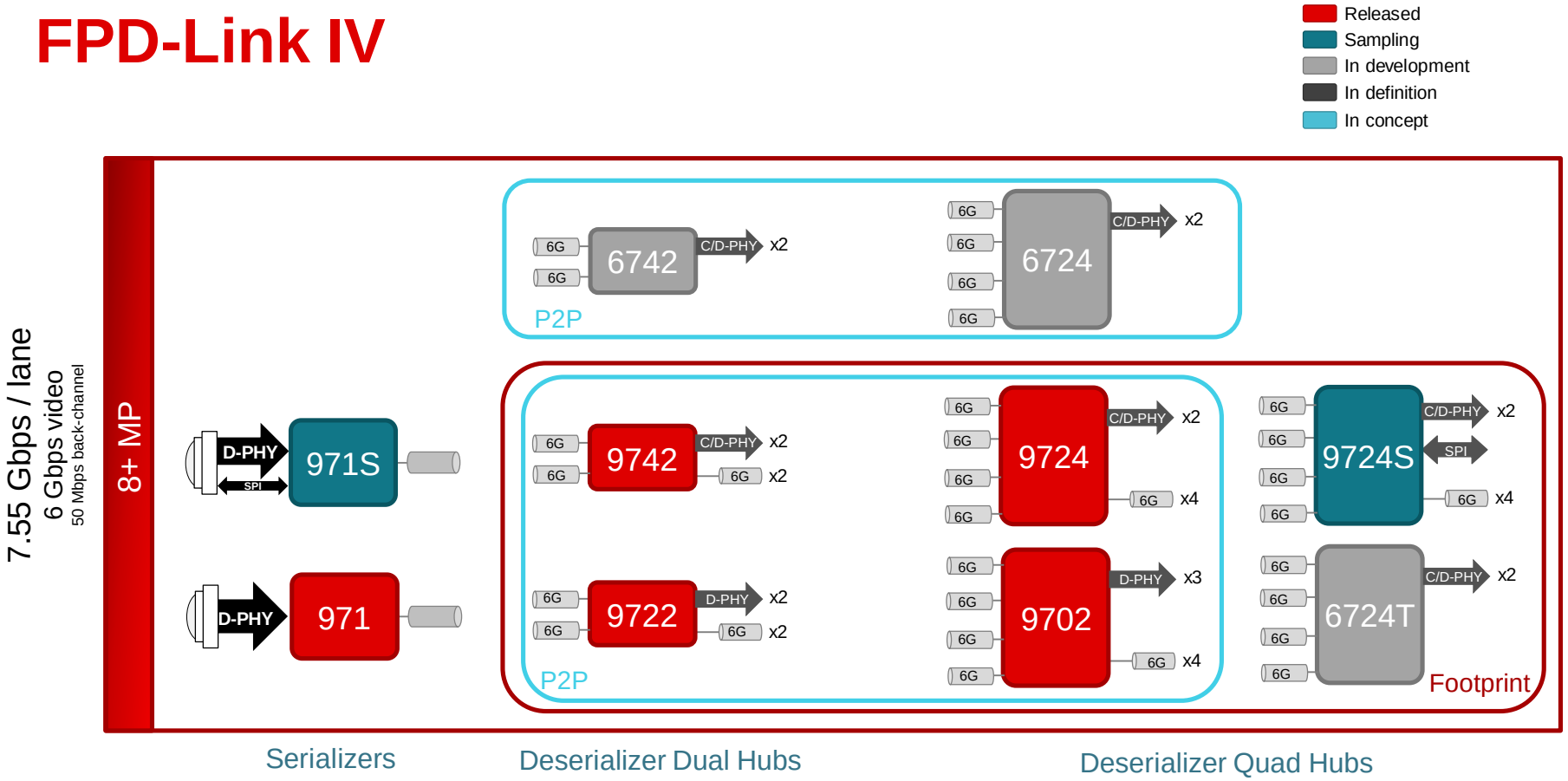

TI Confidential – NDA Restrictions

Texas Instruments

FPD-Link IV Value Proposition

Texas Instruments

Why FPD-Link for IVI? *(Display portfolio)*

Highest bandwidth

- Up to 13.5Gbps per lane, 27Gbps total for 4K60 support
- Only 3% encoding overhead
- Uncompressed 4K UHD 60 Hz over single coax
- Enable full DP v1.4 bandwidth (25.9 Gbps uncompressed, 94 Gbps compressed)

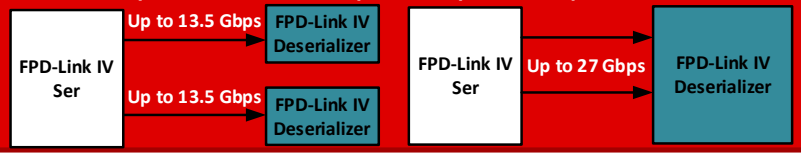

Flexibility

- Flexible link rates: 13.5, 12.528, 10.8, 6.75, 3.375 Gbps to maximize cable length for different video bandwidth
- Up to 4 different displays connected via daisy-chain

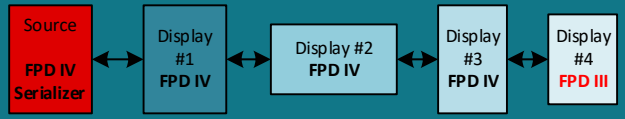

Single Source, 4 different daisy-chained displays

Robust Link

- Advanced AEQ with CTLE and DFE
  - Adapts with frequency >10Hz (every few ms)
- Industry leading analog performance for NRZ transmission
  - High SNR without reliance on FEC (no extra overhead to maintain BER)
  - FEC available for links with DSC
- Powerful eye diagram monitoring available

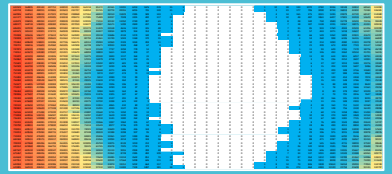

FPD-Link™ are internally produced

- DMOS6 (Dallas) today, LFAB (Utah) in the future
- LFAB 2023 ramp-up will free up resources
- Gives TI control over pricing, availability and longevity

← DMOS6

LFAB →

Why FPD-Link for ADAS? *(Camera portfolio)*

High bandwidth & Efficiency

- Up to 10.8 Gbps per lane, <u>only 3% encoding overhead</u>
- Advanced synchronized forwarding enables efficient data transport
  - Increase aggregated bandwidth > 5 Gbps, more improvement than enabling LRTE on C/D-PHY
  - Line-concatenated forwarding eliminates encoding overhead between video lines

Flexibility

- Mix CSI-2 datatypes, support any combination of CSI-2 data types without extra configuration
- Backward compatibility & video aggregation:
  - Mix & match 1MP to 12 MP cameras combine up to 16 cameras onto single CSI-2 port or daisy-chain
- Flexible FPD-Link IV+ rates:
  - 10.8, 6.75, 3.375 Gbps

Robust Link

- Advanced AEQ with CTLE and DFE
  - Adapts with frequency >10Hz (every few ms)
- Industry leading analog performance for NRZ transmission
  - High SNR without reliance on FEC (no extra overhead to maintain BER)
- Powerful eye diagram monitoring available

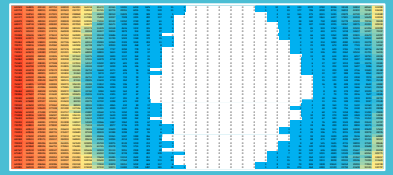

FPD-Link™ are internally produced

- DMOS6 (Dallas) today, LFAB (Utah) in the future
- LFAB 2023 ramp-up will free up resources
- <u>Gives TI control over pricing, availability and longevity</u>

← DMOS6

LFAB →

Texas Instruments