NS6012 Datasheet

Automotive HSMT Serializer

Revision 0.13

Apr 19, 2023

Norelsys Confidential

Norelsys

© Copyright 2021-2023 Norel Systems Limited

All rights reserved.

No part of this document may be reproduced, stored, or transmitted, in any form or by any means without the prior written permission of Norel Systems.

Data contained in this document is subject to change without notice. Norel Systems makes no warranties of any kind, of functionality or suitability. Norel Systems assumes no responsibility for any errors that may appear in this document.

Norel Systems assumes no responsibility or liability for any use of the information contained herein.

Norelsys Confidential

Table of Contents

1. Introduction 6
   1.1. Applications 6
   1.2. Features 8
2. Pin Locations and Descriptions 9
   2.1. Package Diagram with Pin Locations 9
   2.2. Pin Definitions 10
   2.3. Multifunction Pin Assignments 12
   2.4. MODE_SEL Input Map 13
3. Specifications 14
   3.1. Absolute Maximum Ratings 14
   3.2. Recommended Operating Conditions 14
   3.3. Thermal Information 14
4. DC Electrical Characteristics 15
   4.1. Reference Clock Requirement 15
   4.2. Forward-Channel Serial Output 15
   4.3. D-PHY HS Receiver 15
   4.4. D-PHY LP Receiver 16
   4.5. DC Characteristics for Digital IO 16
   4.6. Power Consumption Characteristics 16
   4.7. Power Up and Reset Timing 17
5. AC Electrical Characteristics 18
   5.1. Forward Channel Switching Characteristics 18
   5.2. D-PHY HS Receiver 18
   5.3. D-PHY LP Receiver 18
   5.4. D-PHY Data Clock Timing 19
   5.5. I2C Master Timing 19
   5.6. I2C Slave Timing 20
   5.7. SPI Master Timing 21
   5.8. SPI Slave Timing 21
   5.9. ESD Protection 21
6. Package Information 22
   6.1. 32 Pin QFN (5x5mm) Package 22
7. Ordering Information 23
   7.1. Orderable Part Number Table 23
   7.2. Top Marking 23

Norelsys Confidential

List of Figures

Figure 1. Application Example 6
Figure 2. Functional Block Diagram 7
Figure 3. NS6012 Pinout 9
Figure 4. Power Up and Reset Timing 17
Figure 5. 32 Pin QFN Package Outline 22
Figure 6. NS6012 Top Marking 23

Norelsys Confidential

List of Tables

Table 1. Pin Type Description 10
Table 2. Pin Description 10
Table 3. GPIO Function Map 12
Table 4. MODE_SEL0 Input Map 13
Table 5. MODE_SEL1 Input Map 13
Table 6. Absolute Maximum Ratings 14
Table 7. Recommended Operating Conditions 14
Table 8. Thermal Information 14
Table 9. Reference Clock Requirement 15
Table 10. Forward-Channel Serial Output 15
Table 11. D-PHY HS Receiver 15
Table 12. D-PHY LP Receiver 16
Table 13.DC Characteristics for Digital IO 16
Table 14. Power Consumption Characteristics 16
Table 15. Power Up and Reset Timing Requirement 17
Table 16. Forward Channel Switching Characteristics 18
Table 17. D-PHY HS Receiver (Note 1, 2) 18
Table 18. D-PHY LP Receiver (Note 1, 2) 18
Table 19. D-PHY Data Clock Timing (Note 1, 2) 19
Table 20. I2C Master Timing (Note 1) 19
Table 21. I2C Slave Timing (Note 1) 20
Table 22. SPI Master (Note 1) 21
Table 23. SPI Slave (Note 1) 21
Table 24. ESD Protection 21
Table 25. 32 Pin QFN Package Mechanical Data 22
Table 26. Ordering Information 23

Norelsys Confidential

1. Introduction

The NS6012 Serializer chip is compliant to Automotive Wired High-Speed Media Transmission (HSMT) standard. The NS6012 converts MIPI CSI-2 to one HSMT link output for transmission of video and bi-directional control data. HSMT link operates at a data rate up to 6.4Gbps in the forward direction, and 100Mbps in the backward direction. The NS6012 supports Power-over-Cable (PoC) operation over 16 meters Coaxial cable or 10 meters Shielded Twisted Pair (STP) cable, with multiple inline connectors. The NS6012 is ISO 26262 ASIL-B and AEC-Q100 Grade 2 certified with automotive temperature range of -40 ℃ to +105 ℃.

The NS6012 includes ISO 26262 ASIL-B certified I2C and SPI control ports, flexible GPIO with trigger mode, constant latency mode and oversample mode, tunneled UART, forward and backward audio channels, a built-in ADC, temperature sensor, and an extensive set of diagnostics for functional safety.

1.1. Applications

- High-Definition 12MP Camera Systems
- Advanced Driver Assistance Systems (ADAS)
- Front Vision Camera Systems (FVC)
- Surround View Systems (SVS)
- Driver Monitor Systems (DMS)
- Automatic Parking Assist (APA)

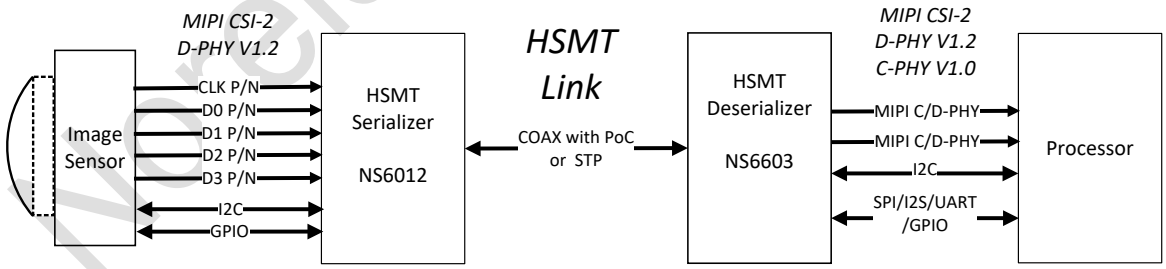

Figure 1. Application Example

Norelsys Confidential

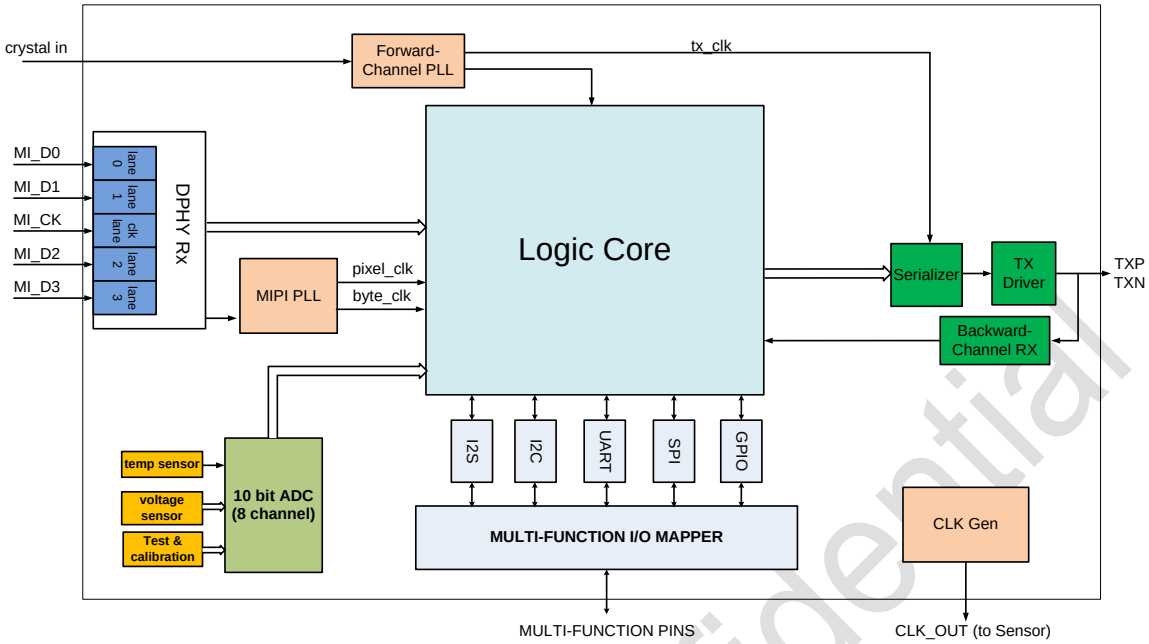

Figure 2. Functional Block Diagram

Norelsys Confidential

1.2. Features

- Multiple data rates for system and power flexibility
  - 2.0, 3.2, 4.0, or 6.4Gbps forward-link rates
  - 100Mbps backward link rate allows small Power-over-Cable inductor
- Robust communication in automotive environement
  - RS-FEC for protection of forward video and control-channel data
  - Physical layer retransmission
- High performance backward receiver
  - Backward channel adaptive equalization
  - Backward channel eye timing margin monitor for continuous link margin diagnosis
  - RS-FEC for protection of backward control-channel data
- Four-lane MIPI CSI-2 input
  - RAW8/10/12/14/16/20/24, RGB888, YUV422 8/10-bit
  - 16 virtual channels
  - 80Mbps-2.5Gbps/lane DPHY v1.2
- Supports 12MP sensors
- Supports bulk and tunneling modes I2C(master up to 833Kbps, slave up to 1Mbps)
- Supports SPI(master/slave up to 50Mbps), GPIO, UART(Tx/Rx), I2S(Tx/Rx up to 48k sample rate)
- Supports data transfers I2C<->I2C, I2C<->SPI, UART<->UART, I2C->UART, SPI->UART
- Supports transfer from GPIO to GPIO with trigger mode, constant latency mode and oversample mode
- Functional safety
  - ISO 26262 ASIL-B certified
  - CRC protection of control-channel data (I2C, SPI)
  - Video data error correction and retransmission
- Video watermark insertion and detection
- Video test pattern generation
- Advanced diagnostics
  - Line fault detection
  - Supply voltage monitor
- Generates reference clock for image sensor synchronizing to back channel clock
- Generates frame sync singal to image sensor
- Programmable spread spectrum for EMI reduction
- 5mm x 5mm QFN package

Norelsys Confidential

2. Pin Locations and Descriptions

2.1. Package Diagram with Pin Locations

Figure 3 shows the NS6012 pinout from the top of the package.

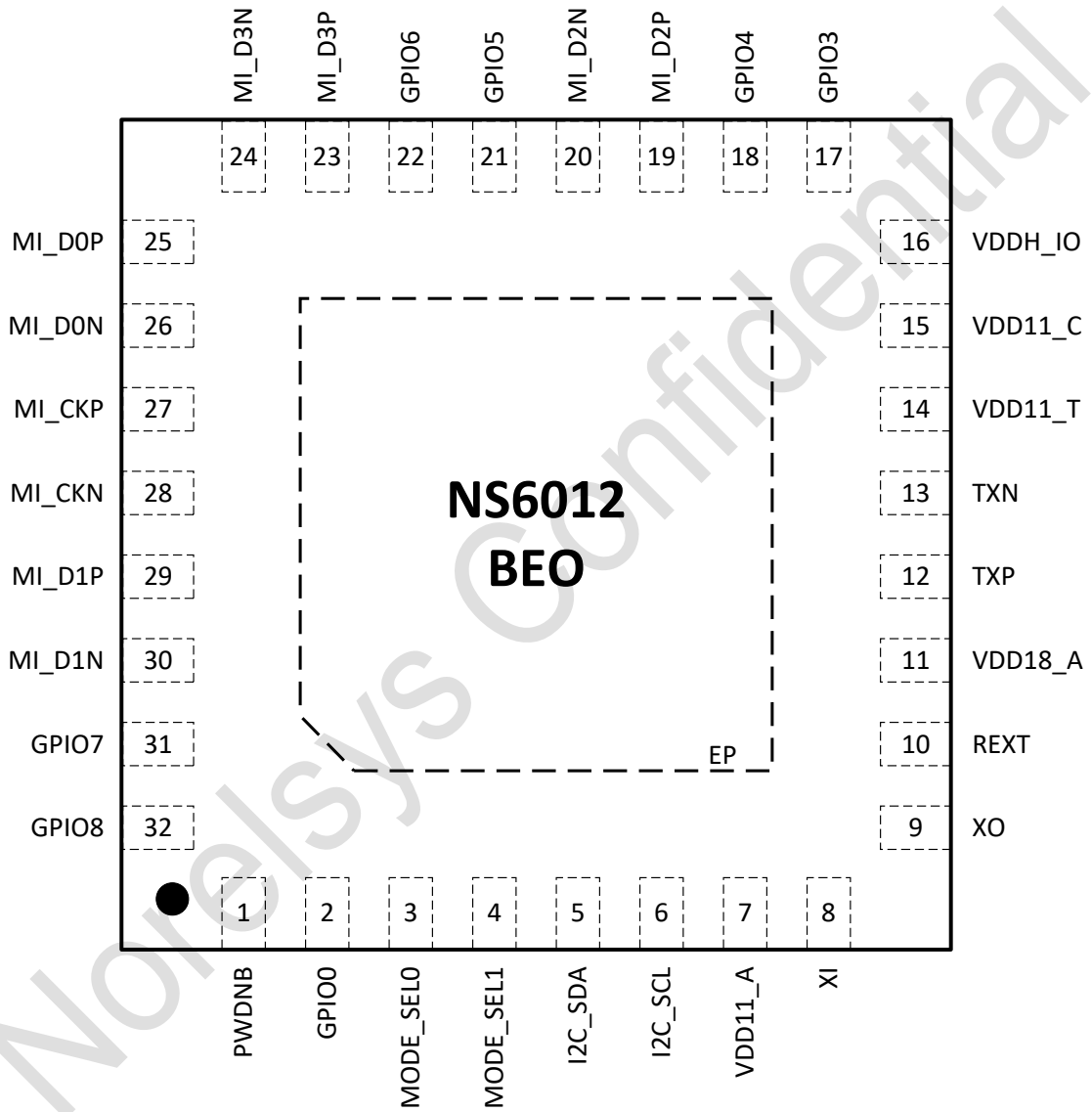

Figure 3. NS6012 Pinout

Norelsys Confidential

2.2. Pin Definitions

This section provides a detailed description of each signal. Table 1 is used to describe the signal type. Table 2 is used to describe the detailed pin description.

Table 1. Pin Type Description

Type	Description
I	Input
O	Output
I/O	Input/Output
PH	Pull high resistor
PL	Pull low resistor
P	Power supply
G	Ground

Table 2. Pin Description

Signal Name	Pin NO.	Type	Description
Serial Interface			
TXP	12	I/O	Positive Coax/STP Serial-Data Input/Output.
TXN	13	I/O	Negative STP Serial-Data Input/Output.
MIPI DPHY Interface			
MI_D0P	25	I	Data Lane 0 Positive D-PHY Input.
MI_D0N	26	I	Data Lane 0 Negative D-PHY Input.
MI_CKP	27	I	Clock Lane Positive D-PHY Input.
MI_CKN	28	I	Clock Lane Negative D-PHY Input.
MI_D1P	29	I	Data Lane 1 Positive D-PHY Input.
MI_D1N	30	I	Data Lane 1 Negative D-PHY Input.
MI_D2P	19	I	Data Lane 2 Positive D-PHY Input.
MI_D2N	20	I	Data Lane 2 Negative D-PHY Input.
MI_D3P	23	I	Data Lane 3 Positive D-PHY Input.
MI_D3N	24	I	Data Lane 3 Negative D-PHY Input.
I2C Interface			
I2C_SDA	5	I/O, OD	I2C data.
I2C_SCL	6	I/O, OD	I2C clock.

Norelsys Confidential

Pin Description (continued)

Signal Name	Pin NO.	Type	Description
Crystal Interface			
XI	8	I	Crystal Input/Oscillator Input. This pin should be connected to a 25MHz crystal or crystal oscillator.
XO	9	O	Crystal Output. If a crystal oscillator connected to XI, XO must be left open.
Control and GPIO Interface			
PWDNB	1	I	Active-Low Power-Down Input with a 200kΩ Pulldown to Ground. Set PWDNB low to enter power-down mode.
GPIO0	2	I/O, PL	GPIO0 Pin. Internal 100kΩ pulldown to ground. ● SPI_CK ● UART_RX
MODE_SEL0	3	I	Mode select 0. Refer to Configuration Table 4.
MODE_SEL1	4	I	Mode select 1. Refer to Configuration Table 5.
GPIO3	17	I/O, PL	GPIO3 Pin. Internal 100kΩ pulldown to ground. ● SPI_CS ● ERROR IN ● ERROR OUT
GPIO4	18	I/O, PL	GPIO4 Pin. Internal 100kΩ pulldown to ground. ● CLK_OUT
GPIO5	21	I/O, PL	GPIO5 Pin. Internal 100kΩ pulldown to ground. ● ERROR OUT ● ERROR IN
GPIO6	22	I/O, PH	GPIO6 Pin. Internal 100KΩ pullup to V_{DDH_IO}. ● UART_TX
GPIO7	31	I/O, PL	GPIO7 Pin. Internal 100kΩ pulldown to ground. ● MOSI ● LOCK ● WRN_IN
GPIO8	32	I/O, PL	GPIO8 Pin. Internal 100kΩ pulldown to ground. ● MISO ● Fsync
REXT	10	I	5.1kΩ±1% external reference resistor connected between this pin and GND.
Power and Ground			
VDD11_A	7	P	1.1V Analog Power Supply.
VDD18_A	11	P	1.8V Analog Power Supply.

Norelsys Confidential

Pin Description (continued)

Signal Name	Pin NO.	Type	Description
VDD11_T	14	P	1.1V Serial I/O Power Supply.
VDD11_C	15	P	1.1V Core Logic Power Supply.
VDDH_IO	16	P	1.8V, 2.5V or 3.3V I/O Power Supply.
EP		G	Exposed Pad. EP is internally connected to device ground. EP must be connected to the PCB ground plane through an array of vias for proper thermal and electrical performance.

2.3. Multifunction Pin Assignments

NS6012 internally supports one I2C master, two I2C slaves, one SPI master, one SPI slave, 9x GPIO, 2x UART Tx, 2x UART Rx, one I2S Tx and one I2S Rx. Table 3 lists typical GPIO function map. More multifunction pin assignments are available via register configurations.

Table 3. GPIO Function Map

Pin	Function	SPI	LOCK	ERR	Fsync	UART
GPIO0	GPIO	SPI_CK				UART_RX
GPIO3		SPI_CS		ERR_IN/ ERR_OUT		
GPIO4	CLK_OUT					
GPIO5				ERR_OUT/ ERR_IN		
GPIO6	GPIO					UART_TX
GPIO7		MOSI	LOCK	WRN_IN		
GPIO8		MISO			Fsync	

Norelsys Confidential

2.4. MODE_SEL Input Map

Table 4. MODE_SEL0 Input Map

MODE_SEL0 Input Voltage (percentage of V_{DD18_A})(1)(2)			Suggested Resistor (±1% tolerance)(2)		Configuration
Min	Typ	Max	R1(k-ohms)	R2(k-ohms)	Device Address
0.0%	0.0%	7.8%	open	10	0x80
11.8%	14.8%	17.9%	84.5	14.7	0x84
21.9%	24.9%	27.9%	75	24.9	0xC0
33.9%	34.9%	37.9%	64.9	34.8	0xC4
41.9%	44.9%	48.1%	57.6	47	reserved
52.1%	55.1%	58.1%	47	57.6	reserved
62.1%	65.1%	68.1%	34.8	64.9	reserved
72.1%	75.1%	78.1%	24.9	75	reserved
82.1%	85.2%	88.2%	14.7	84.5	reserved
92.2%	100.0%	100.0%	10	open	reserved

Table 5. MODE_SEL1 Input Map

MODE_SEL1 Input Voltage (percentage of V_{DD18_A})(1)(2)			Suggested Resistor (±1% tolerance)(2)		Configuration	
Min	Typ	Max	R1(k-ohms)	R2(k-ohms)	Cable	Data rate
0.0%	0.0%	7.8%	open	10	COAX	6.4Gbps
11.8%	14.8%	17.9%	84.5	14.7		4.0Gbps
21.9%	24.9%	27.9%	75	24.9	STP	6.4Gbps
33.9%	34.9%	37.9%	64.9	34.8		4.0Gbps
41.9%	44.9%	48.1%	57.6	47	reserved	
52.1%	55.1%	58.1%	47	57.6		
62.1%	65.1%	68.1%	34.8	64.9	STP	3.2Gbps
72.1%	75.1%	78.1%	24.9	75		2.0Gbps
82.1%	85.2%	88.2%	14.7	84.5	COAX	3.2Gbps
92.2%	100.0%	100.0%	10	open		2.0Gbps

1) Voltage-divider resistor tolerance and V_{DD18_A} supply ripple must not cause the MODE_SEL0 or MODE_SEL1 input voltage to exceed the maximum or minimum limits.

2) Each resistor in the voltage divider must be ≤ 100kΩ. R1 connects to V_{DD18_A}, R2 connects to GND

Norelsys Confidential

3. Specifications

3.1. Absolute Maximum Ratings

Table 6. Absolute Maximum Ratings

Symbol	Parameter	Value	Unit
VDD11_C, VDD11_A, VDD11_T	1.1V supply voltage	-0.3 to 1.25	V
VDD18_A	1.8Vsupply voltage	-0.3 to 2.0	V
VDDH_IO	1.8V-3.3V supply voltage	-0.3 to 3.9	V
Storage temperature	$T_{STORAGE}$	-40 to 150	℃

3.2. Recommended Operating Conditions

Table 7. Recommended Operating Conditions

Symbol	Parameter	Min	Typ	Max	Unit
VDD11_C, VDD11_A, VDD11_T	1.1V supply voltage	1.045	1.1	1.155	V
VDD18_A	1.8V supply voltage	1.71	1.8	1.89	V
VDDH_IO	1.8V-3.3V supply voltage	1.71	1.8/2.5/3.3	3.6	V
T_J	Operating junction temperature	-40	-	125	℃

3.3. Thermal Information

Table 8. Thermal Information

Thermal Metric (Four-Layer Board)		Value	Unit
θ_{JA}	Junction-to-ambient thermal resistance	27.6	℃/W
θ_{JB}	Junction-to-board thermal resistance	8.4	℃/W
$\theta_{JC\text{-}Top}$	Junction-to-case(top) thermal resistance	10.1	℃/W
$\theta_{JC\text{-}Btm}$	Junction-to-case(bottom) thermal resistance	1.1	℃/W
Ψ_{JT}	Junction-to-top thermal characterization parameter	0.1	℃/W
Ψ_{JB}	Junction-to-board thermal characterization parameter	7.7	℃/W

Norelsys Confidential

4. DC Electrical Characteristics

4.1. Reference Clock Requirement

Table 9. Reference Clock Requirement

Parameter	Min	Typ	Max	Unit
Crystal frequency	-	25	-	MHz
Crystal frequency stability including aging	-100	-	100	ppm

4.2. Forward-Channel Serial Output

Table 10. Forward-Channel Serial Output

Parameter	Symbol	Conditions	Min	Typ	Max	Unit
Output Voltage Swing (Single-ended)	V_O	Data rate ≤ 4Gbps	300	400	500	mV
		Data rate > 4Gbps	400	500	600	
Output Voltage Swing (Differential)	V_{ODT}	Data rate ≤ 4Gbps	600	800	1000	mV
		Data rate > 4Gbps	800	1000	1200	
Termination Resistance (Internal)	R_T	TXP/TXN on chip termination	45	50	55	Ω

4.3. D-PHY HS Receiver

Table 11. D-PHY HS Receiver

Parameter	Symbol	Conditions	Min	Typ	Max	Unit
Common-Mode Voltage HS Receive Mode	$V_{CMRX(DC)}$		70	-	330	mV
Differential Input High Threshold	V_{IDTH}		-	-	40	mV
Differential Input Low Threshold	V_{IDTL}		-40	-	-	mV
Single-Ended Input High Voltage	V_{IHHS}		-	-	460	mV
Single-Ended Input Low Voltage	V_{ILHS}		-40	-	-	mV
Differential Input Impedance	Z_{ID}		80	100	125	Ω

Norelsys Confidential

4.4. D-PHY LP Receiver

Table 12. D-PHY LP Receiver

Parameter	Symbol	Conditions	Min	Typ	Max	Unit
Logic 1 Input Voltage	V_{IH}		740	-	-	mV
Logic 0 Input Voltage, Not in ULP State	V_{IL}		-	-	550	mV

4.5. DC Characteristics for Digital IO

Table 13.DC Characteristics for Digital IO

Parameter	Symbol	Conditions	Min	Typ	Max	Unit
High-Level Input Voltage	V_{IH}	V_{DDH_IO}=1.8/2.5/3.3V	0.7 x V_{DDH_IO}			V
Low-Level Input Voltage	V_{IL}	V_{DDH_IO}=1.8V	-	-	0.5	V
		V_{DDH_IO}=2.5V			0.6	
		V_{DDH_IO}=3.3V			0.7	
High-Level Output Voltage	V_{OH}	V_{DDH_IO}=1.8V I_{OH} = -4mA	V_{DDH_IO} -0.45			V
		V_{DDH_IO}=2.5V I_{OH} = -4mA	V_{DDH_IO} -0.65			
		V_{DDH_IO}=3.3V I_{OH} = -4mA	V_{DDH_IO} -0.85			
Low-Level Output Voltage	V_{OL}	V_{DDH_IO}=1.8V I_{OL} = 4mA	-	-	0.45	V
		V_{DDH_IO}=2.5V I_{OL} = 4mA			0.5	
		V_{DDH_IO}=3.3V I_{OL} = 4mA			0.55	

4.6. Power Consumption Characteristics

Table 14. Power Consumption Characteristics

Typical values are at V_{DD18_A}=V_{DDH_IO}=1.8V, V_{DD11_A}=V_{DD11_T}=V_{DD11_C}=1.1V, T_A=25 ℃.

Parameter	Symbol	Conditions	Min	Typ	Max	Unit
Supply Current	1x 4-lane input 1600Mbps/lane D-PHY 1x 6.4Gbps output	1V1		240	TBD	mA
		1V8		15	TBD	

Norelsys Confidential

4.7. Power Up and Reset Timing

The Power Up and Reset Timing rules are defined in this section. Designers should follow all the rules for external power designs. Detailed explanations are listed as Figure 4.

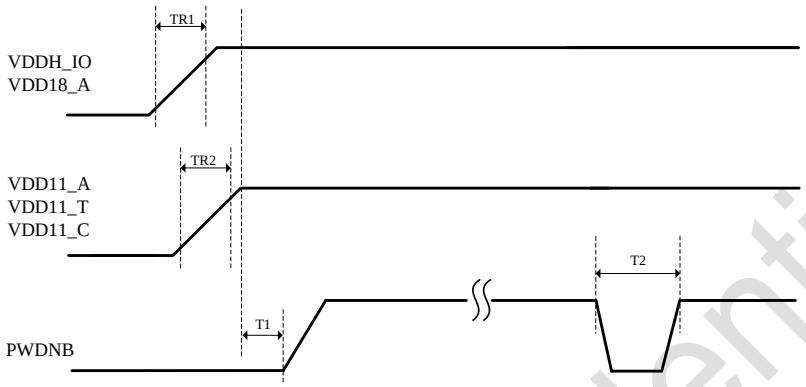

Figure 4. Power Up and Reset Timing

The recommended power sequence and timing requirements are listed as Table 15.

Table 15. Power Up and Reset Timing Requirement

Parameter	Min	Typ	Max	Unit
TR1: V_{DDH_IO}/V_{DD18_A} rise time	0.1	-	-	ms
TR2: $V_{DD11_A}/V_{DD11_T}/V_{DD11_C}$ rise time	0.1	-	-	ms
T1: all power supplies ready to PWDNB	0	-	-	ms
T2: PWDNB hard reset pulse width	100	-	-	us
T3: all power supplies stable to I2C ready	TBD	30		ms
T4: PWDNB to I2C ready	TBD	10		ms

Norelsys Confidential

5. AC Electrical Characteristics

5.1. Forward Channel Switching Characteristics

Table 16. Forward Channel Switching Characteristics

Parameter	Symbol	Conditions	Min	Typ	Max	Unit
Total Serial-Output Jitter	t_{TSOJ}	Differential clock pattern			0.2	UI (p-p)

5.2. D-PHY HS Receiver

Table 17. D-PHY HS Receiver (Note 1, 2)

Parameter	Symbol	Conditions	Min	Typ	Max	Unit
Common-Mode Interference Beyond 450MHz	$\Delta V_{CMRX(HF)}$	Data rate ≤ 1.5Gbps			100	mV
		Data rate > 1.5Gbps			50	
Common-Mode Interference 50MHz–450MHz	$\Delta V_{CMRX(LF)}$	Data rate ≤ 1.5Gbps	-50		50	mV
		Data rate > 1.5Gbps	-25		25	

5.3. D-PHY LP Receiver

Table 18. D-PHY LP Receiver (Note 1, 2)

Parameter	Symbol	Conditions	Min	Typ	Max	Unit
Input Pulse Rejection	e_{SPIKE}				300	V*ps
Minimum Pulse Width Response	T_{MIN-RX}		20			ns
Peak Interference Amplitude	V_{INT}				200	mV
Interference Frequency	f_{INT}		450			MHz

Norelsys Confidential

5.4. D-PHY Data Clock Timing

Table 19. D-PHY Data Clock Timing (Note 1, 2)

Parameter	Symbol	Conditions	Min	Typ	Max	Unit
UI Instantaneous	U_{IINST}		0.4		12.5	ns
Data to Clock Setup Time	$T_{SETUP[RX]}$	≤ 1.0Gbps	0.15			UI_{INST}
		> 1.0Gbps and ≤ 1.5Gbps	0.2			
Data to Clock Hold Time	$T_{HOLD[RX]}$	≤ 1.0Gbps	0.15			UI_{INST}
		> 1.0Gbps and ≤ 1.5Gbps	0.2			

5.5. I2C Master Timing

Table 20. I2C Master Timing (Note 1)

Parameter	Symbol	Conditions	Min	Type	Max	Unit
SCL Clock Frequency	f_{SCL}	Low f_{SCL}		100		kHz
		Mid f_{SCL}		400		
		High f_{SCL}		833		
SCL Clock Period	t_{SCL}			$1/f_{SCL}$		ns
Low Period of SCL Clock	t_{LOW}		0.5			t_{SCL}
High Period of SCL Clock	t_{HIGH}		0.5			t_{SCL}
Data Hold Time	$t_{HD:DAT}$	Low f_{SCL}	0			ns
		Mid f_{SCL}	0			
		High f_{SCL}	0			
Data Setup Time	$t_{SU:DAT}$	Low f_{SCL}	250			ns
		Mid f_{SCL}	100			
		High f_{SCL}	50			

Norelsys Confidential

5.6. I2C Slave Timing

Table 21. I2C Slave Timing (Note 1)

Parameter	Symbol	Conditions	Min	Type	Max	Unit
SCL Clock Frequency	f_{SCL}	Low f_{SCL}		100		kHz
		Mid f_{SCL}		400		
		High f_{SCL}		1000		
SCL Clock Period	t_{SCL}			$1/f_{SCL}$		ns
Low Period of SCL Clock	t_{LOW}	Low f_{SCL}	4.7			us
		Mid f_{SCL}	1.3			
		High f_{SCL}	0.52			
High Period of SCL Clock	t_{HIGH}	Low f_{SCL}	4			us
		Mid f_{SCL}	0.6			
		High f_{SCL}	0.3			
Data Hold Time	$t_{HD:DAT}$	Low f_{SCL}	0			ns
		Mid f_{SCL}	0			
		High f_{SCL}	0			
Data Setup Time	$t_{SU:DAT}$	Low f_{SCL}	250			ns
		Mid f_{SCL}	100			
		High f_{SCL}	40			
Rise time of both SDA and SCL	t_r	Low f_{SCL}			1000	ns
		Mid f_{SCL}	20		300	
		High f_{SCL}	10		120	
Fall time of both SDA and SCL	t_f	Low f_{SCL}			300	ns
		Mid f_{SCL}	20		300	
		High f_{SCL}	10		120	

Norelsys Confidential

5.7. SPI Master Timing

Table 22. SPI Master (Note 1)

Parameter	Symbol	Conditions	Min	Typ	Max	Unit
Programmable Operating Frequency Range	f_{MCK}				50	MHz
SCLK Period	t_{MCK}			$1/f_{MCK}$		ns
SCLK Output Pulse-Width High/Low	t_{MCH}, t_{MCL}			$t_{MCK}/2$		ns
MOSI Data Output Delay	t_{MOD}	After SCLK falling edge	TBD		TBD	ns
MISO Input Setup Time	t_{MIS}	Before programmed sampling edge	TBD			ns
MISO Input Hold Time	t_{MIH}	After programmed sampling edge	TBD			ns

5.8. SPI Slave Timing

Table 23. SPI Slave (Note 1)

Parameter	Symbol	Conditions	Min	Typ	Max	Unit
Operating Frequency	f_{SCK}				50	MHz
SCLK Period	t_{SCK}			$1/f_{SCK}$		ns
MISO Data Output Delay	t_{SOD}	After SCLK falling edge	TBD		TBD	ns
MOSI Input Setup Time	t_{SIS}	Before SCLK rising edge	TBD			ns
MOSI Input Hold Time	t_{SIH}	After SCLK rising edge	TBD			ns

5.9. ESD Protection

Table 24. ESD Protection

Standards	Items	Typ
AEC Q100-002 HBM	Human-body model (HBM) on all high-speed I/O	+/- 4kV
	Human-body model (HBM) on other pins	+/- 4kV
AEC Q100-011 CDM	Charged-device model (CDM)	+/- 750V
IEC 61000-4-2 RD = 330, Cs=150pF	Contact Discharge (all high-speed I/O)	+/- 8kV
	Air Discharge (all high-speed I/O)	+/- 15kV
ISO10605 RD=330, Cs=150/330pF, RD=2k,Cs=150/330pF	Contact Discharge (all high-speed I/O)	+/- 8kV
	Air Discharge (all high-speed I/O)	+/- 15kV

Note 1: Not production tested.

Note 2: Refer to D-PHY Specification v1.2

Norelsys Confidential

6. Package Information

6.1. 32 Pin QFN (5x5mm) Package

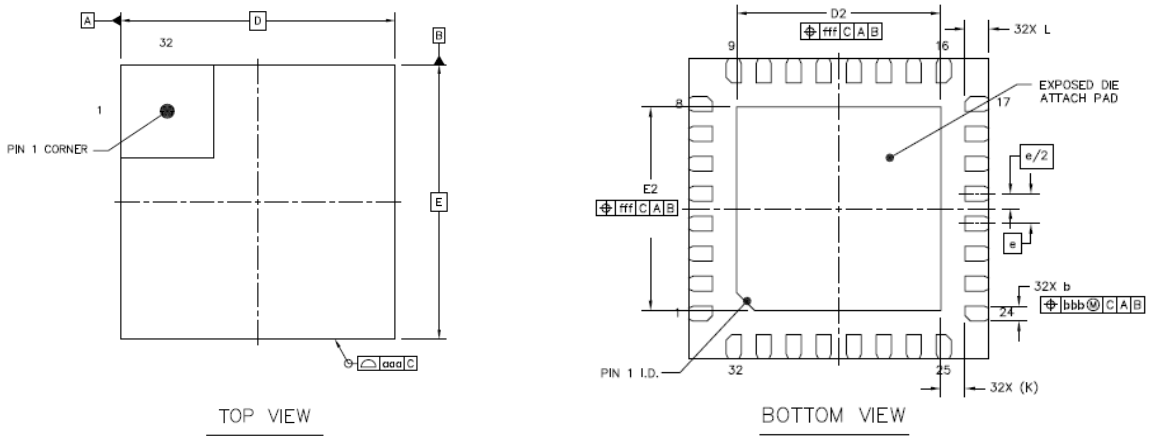

Figure 5. 32 Pin QFN Package Outline

Table 25. 32 Pin QFN Package Mechanical Data

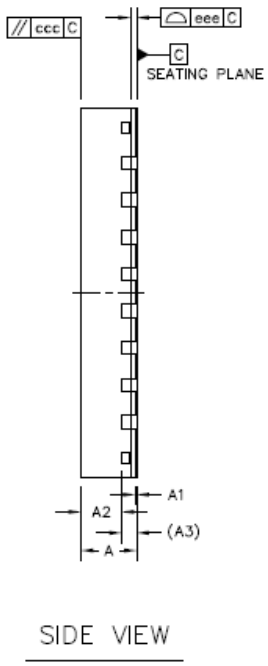

		SYMBOL	MIN	NOM	MAX
TOTAL THICKNESS		A	0.7	0.75	0.8
STAND OFF		A1	0	0.02	0.05
MOLD THICKNESS		A2	---	0.55	---
L/F THICKNESS		A3		0.203 REF	
LEAD WIDTH		b	0.2	0.25	0.3
BODY SIZE	X	D		5 BSC	
	Y	E		5 BSC	
LEAD PITCH		e		0.5 BSC	
EP SIZE	X	D2	3.3	3.4	3.5
	Y	E2	3.3	3.4	3.5
LEAD LENGTH		L	0.35	0.4	0.45
LEAD TIP TO EXPOSED PAD EDGE		K		0.4 REF	
PACKAGE EDGE TOLERANCE		aaa		0.1	
MOLD FLATNESS		ccc		0.1	
COPLANARITY		eee		0.08	
LEAD OFFSET		bbb		0.1	
EXPOSED PAD OFFSET		fff		0.1	

7. Ordering Information

7.1. Orderable Part Number Table

Table 26. Ordering Information

Ordering Number	Package Type	Pins	Side-Wettable	Quantity
NS6012BEO	QFN 5x5mm	32	No	3000

7.2. Top Marking

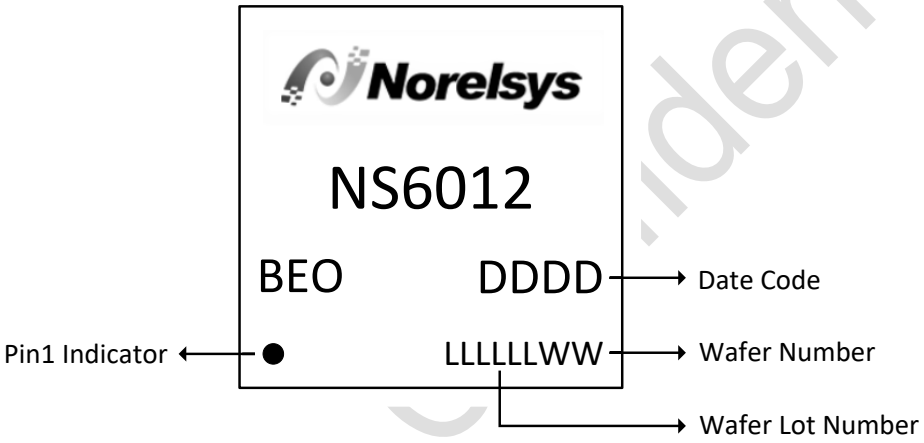

Figure 6. NS6012 Top Marking

Norelsys Confidential