NS6603 Datasheet

Automotive HSMT Deserializer

Revision 0.13

Apr 19, 2023

Norelsys Confidential

Norelsys

© Copyright 2021-2023 Norel Systems Limited

All rights reserved.

No part of this document may be reproduced, stored, or transmitted, in any form or by any means without the prior written permission of Norel Systems.

Data contained in this document is subject to change without notice. Norel Systems makes no warranties of any kind, of functionality or suitability. Norel Systems assumes no responsibility for any errors that may appear in this document.

Norel Systems assumes no responsibility or liability for any use of the information contained herein.

Norelsys Confidential

Table of Contents

1. Introduction 6
   1.1. Applications 6
   1.2. Features 8
2. Pin Locations and Descriptions 9
   2.1. Package Diagram with Pin Locations 9
   2.2. Pin Definitions 10
   2.3. Multifunction Pin Assignments 15
   2.4. MODE_SEL Input Map 16
3. Specifications 17
   3.1. Absolute Maximum Ratings 17
   3.2. Recommended Operating Conditions 17
   3.3. Thermal Information 17
4. DC Electrical Characteristics 18
   4.1. Reference Clock Requirement 18
   4.2. HSMT Backward Channel Serial Outputs 18
   4.3. C-PHY and D-PHY LP Transmitter 18
   4.4. D-PHY HS Transmitter 19
   4.5. C-PHY HS Transmitter 19
   4.6. DC Characteristics for Digital IO 20
   4.7. Power Consumption Characteristics 20
   4.8. Power Up and Reset Timing 21
5. AC Electrical Characteristics 22
   5.1. C-PHY and D-PHY LP Transmitter 22
   5.2. D-PHY HS Transmitter 22
   5.3. D-PHY Data-Clock Timing 22
   5.4. D-PHY Global Operation Timing 23
   5.5. C-PHY HS Transmitter 24
   5.6. C-PHY Global Operation Timing 24
   5.7. I2C Master Timing 24
   5.8. I2C Slave Timing 25
   5.9. SPI Master Timing 26
   5.10. SPI Slave Timing 26
   5.11. ESD Protection 26
6. Package Information 27
   6.1. 76 Pin QFN (9x9mm) Package 27
7. Ordering Information 28
   7.1. Orderable Part Number Table 28
   7.2. Top Marking 28

Norelsys Confidential

List of Figures

Figure 1. Application Example 7
Figure 2. Functional Block Diagram 7
Figure 3. NS6603 Pinout 9
Figure 4. Power Up and Reset Timing 21
Figure 5. 76 Pin QFN Package Outline 27
Figure 6. NS6603 Top Marking 28

Norelsys Confidential

List of Tables

Table 1. Typical Maximum Cable Length vs. Attenuation 6
Table 2. Pin Type Description 10
Table 3. Pin Description 10
Table 4. GPIO Function Map 15
Table 5. MODE_SEL0 Input Map 16
Table 6. MODE_SEL1 Input Map 16
Table 7. Absolute Maximum Ratings 17
Table 8. Recommended Operating Conditions 17
Table 9. Recommended Operating Conditions 17
Table 10. Reference Clock Requirement 18
Table 11. HSMT Backward Channel Serial Outputs 18
Table 12. C-PHY and D-PHY LP Transmitter 18
Table 13. D-PHY HS Transmitter 19
Table 14. C-PHY HS Transmitter 19
Table 15. DC Characteristics for Digital IO 20
Table 16. Power Consumption Characteristics 20
Table 17. Power Up and Reset Timing Requirement 21
Table 18. C-PHY and D-PHY LP Transmitter (Note 1, 2, 3) 22
Table 19. D-PHY HS Transmitter (Note 1, 2) 22
Table 20. D-PHY Data-Clock Timing (Note 1, 2) 22
Table 21. D-PHY Global Operation Timing (Note 1, 2) 23
Table 22. C-PHY HS Transmitter (Note 1, 3) 24
Table 23. C-PHY Global Operation Timing (Note 1, 3) 24
Table 24. I2C Master Timing (Note 1) 24
Table 25. I2C Slave Timing (Note 1) 25
Table 26. SPI Master (Note 1) 26
Table 27. SPI Slave (Note 1) 26
Table 28. ESD Protection 26
Table 29. 76 Pin QFN Package Mechanical Data 27
Table 30. Ordering Information 28

Norelsys Confidential

1. Introduction

The NS6603 Deserializer chip is compliant to Automotive Wired High-Speed Media Transmission (HSMT) standard. The NS6603 converts HSMT input to MIPI CSI-2 D-PHY or C-PHY formatted output. The NS6603 is a quad-receiving chip to accommodate as many as 4 remotely located sensors. HSMT link operates at a data rate up to 6.4Gbps in the forward direction, and 100Mbps in the backward direction. The NS6603 supports 16 meters Coaxial cable or 10 meters Shielded Twisted Pair (STP) cable, with multiple inline connectors. The NS6603 is ISO 26262 ASIL-B and AEC-Q100 Grade 2 certified with automotive temperature range of -40 ℃ to +105 ℃.

The NS6603 includes ISO 26262 ASIL-B certified I2C and SPI control ports, flexible GPIO with trigger mode, constant latency mode and oversample mode, tunneled UART, forward and backward audio channels, a built-in ADC, temperature sensor, and an extensive set of diagnostics for functional safety.

Table 1. Typical Maximum Cable Length vs. Attenuation

	Dacar 302-3 50Ω Coax	RG174 50Ω Coax	100Ω STP
Attenuation at 3GHz (Typ, Room Temp)	0.9dB/m	1.5dB/m	1.8dB/m
Attenuation at 3GHz (Max, Aged, 105 ℃)	1.1dB/m	1.8dB/m	2.2dB/m
HSMT Forward/ Backward Data Rate	Typical Maximum Cable Length at 105 ℃		
3.2Gbps/100Mbps	22m	12m	12m
6.4Gbps/100Mbps	16m	10m	10m

1.1. Applications

- High-Definition 12MP Camera Systems
- Advanced Driver Assistance Systems (ADAS)
- Front Vision Camera Systems (FVC)
- Surround View Systems (SVS)
- Driver Monitor Systems (DMS)
- Automatic Parking Assist (APA)

Norelsys Confidential

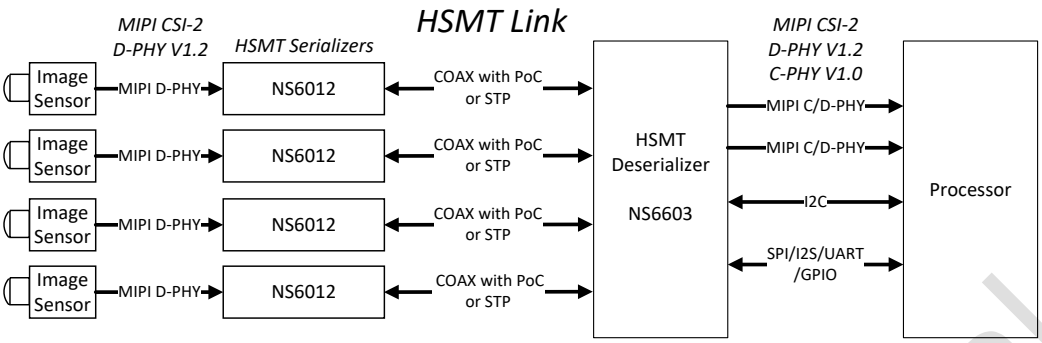

Figure 1. Application Example

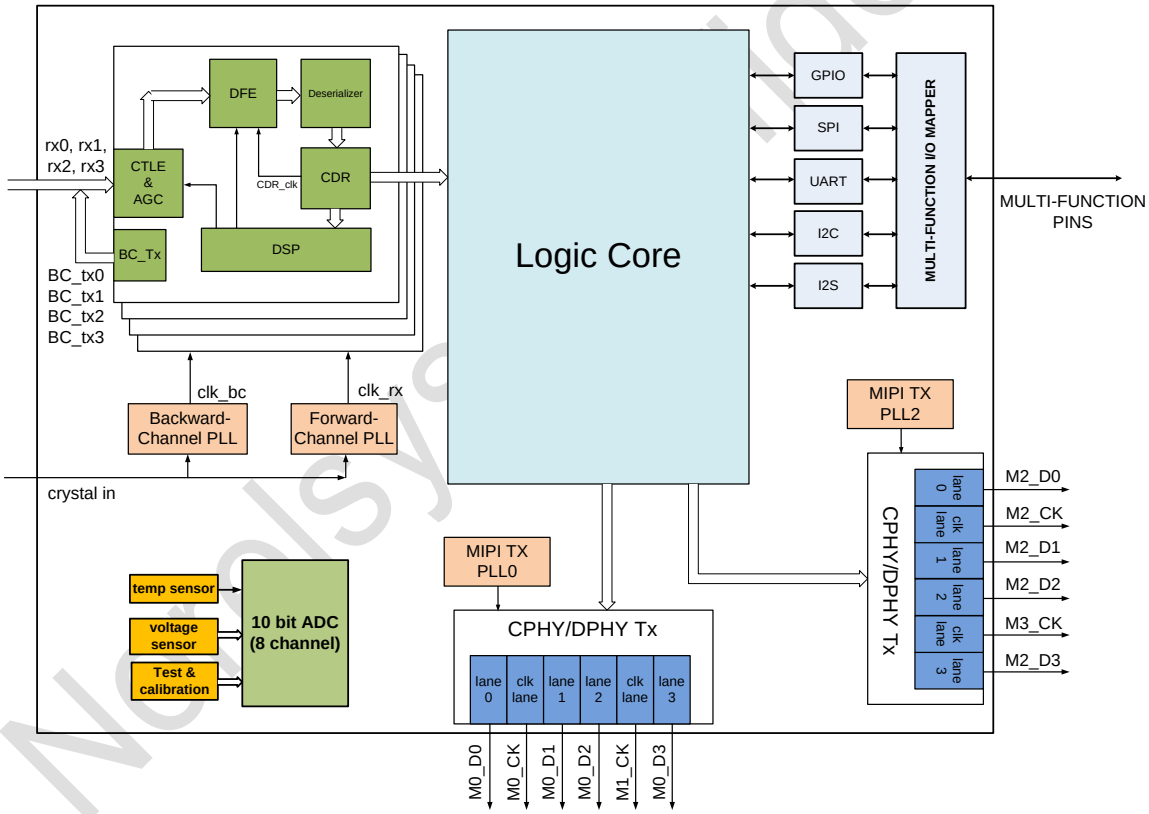

Figure 2. Functional Block Diagram

Norelsys Confidential

1.2. Features

- Multiple data rates for system and power flexibility
  - 2.0, 3.2, 4.0, or 6.4Gbps forward-link rates
  - 100Mbps backward link rate allows small Power-over-Cable inductor
- Robust communication in automotive environement
  - Forward channel adaptive equalization
  - RS-FEC for protection of forward video and control-channel data
  - Retransmission
  - Advanced DSP continuously tracking changes in cable, connector, PCB and other channel characteristics over time and temperature
- MIPI CSI-2 output configurable as D-PHY and/or C-PHY
  - RAW8/10/12/14/16/20/24, RGB888, YUV422 8/10-bit
  - D-PHY v1.2 up to 2.5Gbps/lane, 2x4-lane, 1x4-lane + 2x2-lane, 4x2-lane
  - C-PHY v1.0 up to 5.7Gbps/trio, 2x4-trio, 1x4-trio + 2x2-trio, 4x2-trio
  - 16-channel virtual channel support (D-PHY)
  - 32-channel virtual channel support (C-PHY)
  - Supports aggregation and replication of video data
  - Supports superframe with frame concatenation
- Functional safety
  - ISO 26262 ASIL-B certified
  - CRC protection of control-channel data (I2C, SPI)
  - Video data error correction and retransmission
- Video watermark insertion and detection
- Line fault detection
- Supports bulk and tunneling modes I2C (master up to 833Kbps, slave up to 1Mbps)
- Supports SPI (master/slave up to 50Mbps), GPIO, UART (Tx/Rx), I2S (Tx/Rx up to 48k sample rate)
- Supports data transfers I2C<->I2C, I2C<->SPI, UART<->UART, I2C->UART, SPI->UART
- Supports simultaneously data transfer to up to 4 destinations from I2C, SPI and UART
- Supports simultaneously transfer from GPIO to up to 4 destination GPIOs with trigger mode, constant latency mode and oversample mode
- Supports eight hardware-selectable device addresses
- 9mm x 9mm QFN package

Norelsys Confidential

2. Pin Locations and Descriptions

2.1. Package Diagram with Pin Locations

Figure 3 shows the NS6603 pinout from the top of the package.

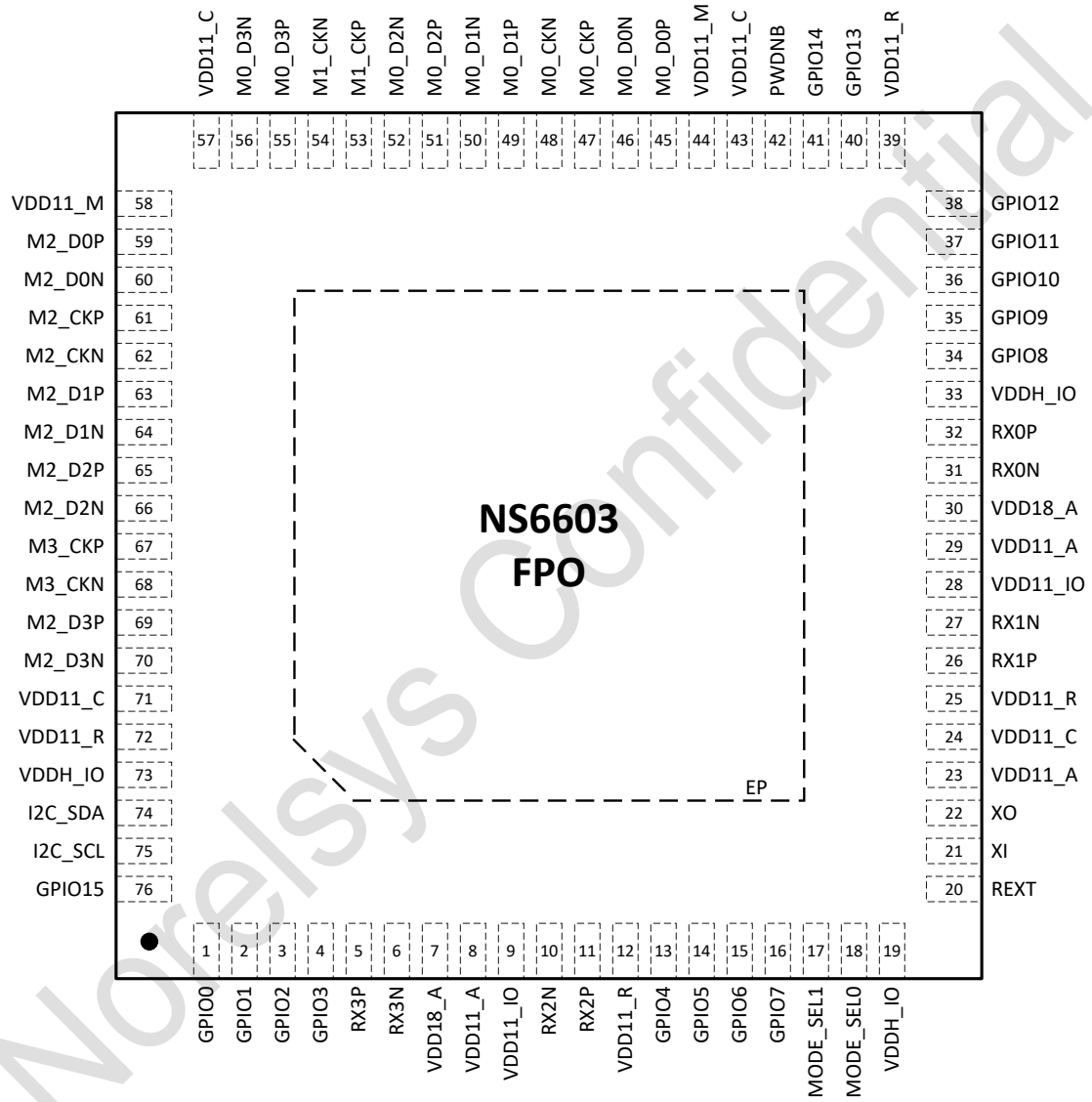

Figure 3. NS6603 Pinout

Norelsys Confidential

2.2. Pin Definitions

This section provides a detailed description of each signal. Table 2 is used to describe the signal type. Table 3 is used to describe the detailed pin description.

Table 2. Pin Type Description

Type	Description
I	Input
O	Output
I/O	Input/Output
PH	Pull high resistor
PL	Pull low resistor
P	Power supply
G	Ground

Table 3. Pin Description

Signal Name	Pin NO.	Type	Description
Serial Interface			
RX0P	32	I/O	Positive Coax/Twisted-Pair Serial-Data Input/Output 0.
RX0N	31	I/O	Negative Twisted-Pair Serial-Data Input/Output 0.
RX1P	26	I/O	Positive Coax/Twisted-Pair Serial-Data Input/Output 1.
RX1N	27	I/O	Negative Twisted-Pair Serial-Data Input/Output 1.
RX2P	11	I/O	Positive Coax/Twisted-Pair Serial-Data Input/Output 2.
RX2N	10	I/O	Negative Twisted-Pair Serial-Data Input/Output 2.
RX3P	5	I/O	Positive Coax/Twisted-Pair Serial-Data Input/Output 3.
RX3N	6	I/O	Negative Twisted-Pair Serial-Data Input/Output 3.
MIPI DPHY Interface			
M0_D0P	45	O	M0_D0P: D-PHY Port 0 Data Lane 0 Positive Output. (4-Lane Mode). M0_D0P: D-PHY Port 0 Data Lane 0 Positive Output. (2-Lane Mode). M0_C0A: C-PHY Port 0 Trio 0 Output A (4-Trio Mode). M0_C0A: C-PHY Port 0 Trio 0 Output A (2-Trio Mode).
M0_D0N	46	O	M0_D0N: D-PHY Port 0 Data Lane 0 Negative Output. (4-Lane Mode). M0_D0N: D-PHY Port 0 Data Lane 0 Negative Output. (2-Lane Mode). M0_C0B: C-PHY Port 0 Trio 0 Output B (4-Trio Mode). M0_C0B: C-PHY Port 0 Trio 0 Output B (2-Trio Mode).

Norelsys Confidential

Pin Description (continued)

Signal Name	Pin NO.	Type	Description
M0_CKP	47	O	M0_CKP: D-PHY Port 0 Clock Lane Positive Output. (4-Lane Mode). M0_CKP: D-PHY Port 0 Clock Lane Positive Output. (2-Lane Mode). M0_C0C: C-PHY Port 0 Trio 0 Output C (4-Trio Mode). M0_C0C: C-PHY Port 0 Trio 0 Output C (2-Trio Mode).
M0_CKN	48	O	M0_CKN: D-PHY Port 0 Clock Lane Negative Output. (4-Lane Mode). M0_CKN: D-PHY Port 0 Clock Lane Negative Output. (2-Lane Mode). M0_C1A: C-PHY Port 0 Trio 1 Output A (4-Trio Mode). M0_C1A: C-PHY Port 0 Trio 1 Output A (2-Trio Mode).
M0_D1P	49	O	M0_D1P: D-PHY Port 0 Data Lane 1 Positive Output. (4-Lane Mode). M0_D1P: D-PHY Port 0 Data Lane 1 Positive Output. (2-Lane Mode). M0_C1B: C-PHY Port 0 Trio 1 Output B (4-Trio Mode). M0_C1B: C-PHY Port 0 Trio 1 Output B (2-Trio Mode).
M0_D1N	50	O	M0_D1N: D-PHY Port 0 Data Lane 1 Negative Output. (4-Lane Mode). M0_D1N: D-PHY Port 0 Data Lane 1 Negative Output. (2-Lane Mode). M0_C1C: C-PHY Port 0 Trio 1 Output C (4-Trio Mode). M0_C1C: C-PHY Port 0 Trio 1 Output C (2-Trio Mode).
M0_D2P	51	O	M0_D2P: D-PHY Port 0 Data Lane 2 Positive Output. (4-Lane Mode). M1_D0P: D-PHY Port 1 Data Lane 0 Positive Output. (2-Lane Mode). M0_C2A: C-PHY Port 0 Trio 2 Output A (4-Trio Mode). M1_C0A: C-PHY Port 1 Trio 0 Output A (2-Trio Mode).
M0_D2N	52	O	M0_D2N: D-PHY Port 0 Data Lane 2 Negative Output. (4-Lane Mode). M1_D0N: D-PHY Port 1 Data Lane 0 Negative Output. (2-Lane Mode). M0_C2B: C-PHY Port 0 Trio 2 Output B (4-Trio Mode). M1_C0B: C-PHY Port 1 Trio 0 Output B (2-Trio Mode).
M1_CKP	53	O	NC in D-PHY 4-Lane Mode. M1_CKP: D-PHY Port 1 Clock Lane Positive Output. (2-Lane Mode). M0_C2C: C-PHY Port 0 Trio 2 Output C (4-Trio Mode). M1_C0C: C-PHY Port 1 Trio 0 Output C (2-Trio Mode).
M1_CKN	54	O	NC in D-PHY 4-Lane Mode. M1_CKN: D-PHY Port 1 Clock Lane Negative Output. (2-Lane Mode). M0_C3A: C-PHY Port 0 Trio 3 Output A (4-Trio Mode). M1_C1A: C-PHY Port 1 Trio 1 Output A (2-Trio Mode).
M0_D3P	55	O	M0_D3P: D-PHY Port 0 Data Lane 3 Positive Output. (4-Lane Mode). M1_D1P: D-PHY Port 1 Data Lane1 Positive Output. (2-Lane Mode). M0_C3B: C-PHY Port 0 Trio 3 Output B (4-Trio Mode). M1_C1B: C-PHY Port 1 Trio 1 Output B (2-Trio Mode).

Norelsys Confidential

Pin Description (continued)

Signal Name	Pin NO.	Type	Description
M0_D3N	56	O	M0_D3N: D-PHY Port 0 Data Lane 3 Negative Output. (4-Lane Mode). M1_D1N: D-PHY Port 1 Data Lane 1 Negative Output. (2-Lane Mode). M0_C3C: C-PHY Port 0 Trio 3 Output C (4-Trio Mode). M1_C1C: C-PHY Port 1 Trio 1 Output C (2-Trio Mode).
M2_D0P	59	O	M2_D0P: D-PHY Port 2 Data Lane 0 Positive Output. (4-Lane Mode). M2_D0P: D-PHY Port 2 Data Lane 0 Positive Output. (2-Lane Mode). M2_C0A: C-PHY Port 2 Trio 0 Output A (4-Trio Mode). M2_C0A: C-PHY Port 2 Trio 0 Output A (2-Trio Mode).
M2_D0N	60	O	M2_D0N: DPHY Port 2 Data Lane 0 Negative Output. (4-Lane Mode). M2_D0N: D-PHY Port 2 Data Lane 0 Negative Output. (2-Lane Mode). M2_C0B: C-PHY Port 2 Trio 0 Output B (4-Trio Mode). M2_C0B: C-PHY Port 2 Trio 0 Output B (2-Trio Mode).
M2_CKP	61	O	M2_CKP: D-PHY Port 2 Clock Lane Positive Output. (4-Lane Mode). M2_CKP: D-PHY Port 2 Clock Lane Positive Output. (2-Lane Mode). M2_C0C: C-PHY Port 2 Trio 0 Output C (4-Trio Mode). M2_C0C: C-PHY Port 2 Trio 0 Output C (2-Trio Mode).
M2_CKN	62	O	M2_CKN: D-PHY Port 2 Clock Lane Negative Output. (4-Lane Mode). M2_CKN: D-PHY Port 2 Clock Lane Negative Output. (2-Lane Mode). M2_C1A: C-PHY Port 2 Trio 1 Output A (4-Trio Mode). M2_C1A: C-PHY Port 2 Trio 1 Output A (2-Trio Mode).
M2_D1P	63	O	M2_D1P: D-PHY Port 2 Data Lane 1 Positive Output. (4-Lane Mode). M2_D1P: D-PHY Port 2 Data Lane 1 Positive Output. (2-Lane Mode). M2_C1B: C-PHY Port 2 Trio 1 Output B (4-Trio Mode). M2_C1B: C-PHY Port 2 Trio 1 Output B (2-Trio Mode).
M2_D1N	64	O	M2_D1N: D-PHY Port 2 Data Lane 1 Negative Output. (4-Lane Mode). M2_D1N: D-PHY Port 2 Data Lane 1 Negative Output. (2-Lane Mode). M2_C1C: C-PHY Port 2 Trio 1 Output C (4-Trio Mode). M2_C1C: C-PHY Port 2 Trio 1 Output C (2-Trio Mode).
M2_D2P	65	O	M2_D2P: D-PHY Port 2 Data Lane 2 Positive Output. (4-Lane Mode). M3_D0P: D-PHY Port 3 Data Lane 0 Positive Output. (2-Lane Mode). M2_C2A: C-PHY Port 2 Trio 2 Output A (4-Trio Mode). M3_C0A: C-PHY Port 3 Trio 0 Output A (2-Trio Mode).
M2_D2N	66	O	M2_D2N: D-PHY Port 2 Data Lane 2 Negative Output. (4-Lane Mode). M3_D0N: D-PHY Port 3 Data Lane 0 Negative Output. (2-Lane Mode). M2_C2B: C-PHY Port 2 Trio 2 Output B (4-Trio Mode). M3_C0B: C-PHY Port 3 Trio 0 Output B (2-Trio Mode).

Norelsys Confidential

Pin Description (continued)

Signal Name	Pin NO.	Type	Description
M3_CKP	67	O	NC in D-PHY 4-Lane Mode. M3_CKP: D-PHY Port 3 Clock Lane Positive Output. (2-Lane Mode). M2_C2C: C-PHY Port 2 Trio 2 Output C (4-Trio Mode). M3_C0C: C-PHY Port 3 Trio 0 Output C (2-Trio Mode).
M3_CKN	68	O	NC in D-PHY 4-Lane Mode. M3_CKN: D-PHY Port 3 Clock Lane Negative Output. (2-Lane Mode). M2_C3A: C-PHY Port 2 Trio 3 Output A (4-Trio Mode). M3_C1A: C-PHY Port 3 Trio 1 Output A (2-Trio Mode).
M2_D3P	69	O	M2_D3P: D-PHY Port 2 Data Lane 3 Positive Output. (4-Lane Mode). M3_D1P: D-PHY Port 3 Data Lane 1 Positive Output. (2-Lane Mode). M2_C3B: C-PHY Port 2 Trio 3 Output B (4-Trio Mode). M3_C1B: C-PHY Port 3 Trio 1 Output B (2-Trio Mode).
M2_D3N	70	O	M2_D3N: D-PHY Port 2 Data Lane 3 Negative Output. (4-Lane Mode). M3_D1N: D-PHY Port 3 Data Lane 1 Negative Output. (2-Lane Mode). M2_C3C: C-PHY Port 2 Trio 3 Output C (4-Trio Mode). M3_C1C: C-PHY Port 3 Trio 1 Output C (2-Trio Mode).
Analog Signal Interface			
MODE_SEL0	18	I	Mode select 0. Refer to Configuration Table 5.
MODE_SEL1	17	I	Mode select 1. Refer to Configuration Table 6.
REXT	20	I	5.1kΩ ±1% external reference resistor connected between this pin and GND.
XI	21	I	Crystal Input/Oscillator Input. This pin should be connected to a 25MHz crystal or crystal oscillator.
XO	22	O	Crystal Output. If a crystal oscillator connected to XI, XO must be left open.
Multifunctional GPIO Interface			
PWDNB	42	I	Active-Low Power-Down Input with a 200kΩ Pulldown to Ground. Set PWDNB low to enter power-down mode.
GPIO0	1	I/O, PL	GPIO0 Pin. Internal 100kΩ pulldown to ground. ● SPI_CK
GPIO1	2	I/O, PL	GPIO1 Pin. Internal 100kΩ pulldown to ground. ● LOCK
GPIO2	3	I/O, PL	GPIO2 Pin. Internal 100kΩ pulldown to ground. ● Fsync0

Norelsys Confidential

Pin Description (continued)

Signal Name	Pin NO.	Type	Description
GPIO3	4	I/O, PH	GPIO3 Pin. Internal 100kΩ pullup to V_{DDH_IO}. ● MOSI ● ERRORB ● UART_TX
GPIO4	13	I/O, PH	GPIO4 Pin. Internal 100kΩ pullup to V_{DDH_IO}. ● MISO ● UART_RX
GPIO5	14	I/O, PL	GPIO5 Pin. Internal 100kΩ pulldown to ground. ● ERROR0
GPIO6	15	I/O, PL	GPIO6 Pin. Internal 100kΩ pulldown to ground. ● ERROR1
GPIO7	16	I/O, PL	GPIO7 Pin. Internal 100kΩ pulldown to ground. ● ERROR2
GPIO8	34	I/O, PL	GPIO8 Pin. Internal 100kΩ pulldown to ground. ● ERROR3
GPIO9	35	I/O, PH	GPIO9 Pin. Internal 100kΩ pullup to $V_{DDH_IO.}$ ● SPI_CS
GPIO10	36	I/O, PL	GPIO10 Pin. Internal 100kΩ pulldown to ground. ● Fsync1
GPIO11	37	I/O, PH	GPIO11 Pin. Internal 100kΩ pullup to $V_{DDH_IO.}$ ● I2C2_SDA
GPIO12	38	I/O, PH	GPIO12 Pin. Internal 100kΩ pullup to V_{DDH_IO}. ● I2C2_SCL
GPIO13	40	I/O, PL	GPIO13 Pin. Internal 100kΩ pulldown to ground. ● Fsync2
GPIO14	41	I/O, PL	GPIO14 Pin. Internal 100kΩ pulldown to ground. ● Fsync3
GPIO15	76	I/O, PH	GPIO15 Pin. Internal 100kΩ pullup to $V_{DDH_IO.}$ ● SPI_CS
I2C_SDA	74	I/O, OD	I2C data.
I2C_SCL	75	I/O, OD	I2C clock.
Power and Ground			
VDD11_C	24, 43, 57, 71	P	1.1V Core logic power supply.
VDD11_R	12, 25, 39, 72	P	1.1V High speed circuit power supply.
VDD11_IO	9, 28	P	1.1V I/O Power supply.
VDD11_A	8, 23, 29	P	1.1V Analog power supply.
VDD11_M	44, 58	P	1.1V MIPI power supply.
VDD18_A	7, 30	P	1.8V Analog power supply.

Norelsys Confidential

Pin Description (continued)

Signal Name	Pin NO.	Type	Description
VDDH_IO	19, 33, 73	P	1.8V, 2.5V or 3.3V I/O power supply.
EP		G	Exposed Pad. EP is internally connected to device ground. EP must be connected to the PCB ground plane through an array of vias for proper thermal and electrical performance.

2.3. Multifunction Pin Assignments

NS6603 internally supports one I2C master, two I2C slaves, one SPI master, one SPI slave, 18x GPIO, 2x UART Tx, 2x UART Rx, one I2S Tx and one I2S Rx. Table 4 lists typical GPIO function map. More multifunction pin assignments are available via register configurations.

Table 4. GPIO Function Map

Pin	Function	SPI	LOCK	ERR	Fsync	I2C	UART
GPIO0	GPIO	SPI_CK					
GPIO1			LOCK				
GPIO2					Fsync0		
GPIO3	GPIO	MOSI		ERRB			UART_TX
GPIO4	GPIO	MISO					UART_RX
GPIO5				ERR0			
GPIO6				ERR1			
GPIO7				ERR2			
GPIO8				ERR3			
GPIO9	GPIO	SPI_CS					
GPIO10					Fsync1		
GPIO11						I2C2_SDA	
GPIO12						I2C2_SCL	
GPIO13					Fsync2		
GPIO14					Fsync3		
GPIO15	GPIO	SPI_CS					

Norelsys Confidential

2.4. MODE_SEL Input Map

Table 5. MODE_SEL0 Input Map

MODE_SEL0 Input Voltage (percentage of V_{DD18_A})(1)(2)			Suggested Resistor (±1% tolerance)(2)		Configuration
MIN	TYP	MAX	R1(k-ohms)	R2(k-ohms)	Device Address
0.0%	0.0%	11.7%	open	10	0x52
16.9%	20.2%	23.6%	80.6	20.5	0x54
28.8%	32.1%	35.5%	68.1	32.4	0x5A
40.7%	44.0%	47.4%	56.2	44.2	0x92
52.6%	56.0%	59.3%	44.2	56.2	0x96
64.5%	67.9%	71.2%	32.4	68.1	0x9A
76.4%	79.8%	83.1%	20.5	80.6	0xD2
88.3%	100%	100%	10	open	0xD6

Table 6. MODE_SEL1 Input Map

MODE_SEL1 Input Voltage (percentage of V_{DD18_A})(1)(2)			Suggested Resistor (±1% tolerance)(3)		Configuration
MIN	TYP	MAX	R1(k-ohms)	R2(k-ohms)	Cable
0.0%	0.0%	11.7%	open	10	COAX
16.9%	20.2%	23.6%	80.6	20.5	reserved
28.8%	32.1%	35.5%	68.1	32.4	reserved
40.7%	44.0%	47.4%	56.2	44.2	STP
52.6%	56.0%	59.3%	44.2	56.2	reserved
64.5%	67.9%	71.2%	32.4	68.1	reserved
76.4%	79.8%	83.1%	20.5	80.6	reserved
88.3%	100%	100%	10	open	reserved

1) Voltage-divider resistor tolerance and V_{DD18_A} supply ripple must not cause the MODE_SEL0 or MODE_SEL1 input voltage to exceed the maximum or minimum limits.

2) Each resistor in the voltage divider must be ≤ 100kΩ. R1 connects to V_{DD18_A}, R2 connects to GND

Norelsys Confidential

3. Specifications

3.1. Absolute Maximum Ratings

Table 7. Absolute Maximum Ratings

Symbol	Parameter	Value	Unit
VDD11_C, VDD11_A, VDD11_R,VDD11_IO,VDD11_M	1.1V supply voltage	-0.3 to 1.25	V
VDD18_A	1.8Vsupply voltage	-0.3 to 2.0	V
VDDH_IO	1.8V-3.3V supply voltage	-0.3 to 3.9	V
Storage temperature	$T_{STORAGE}$	-40 to 150	℃

3.2. Recommended Operating Conditions

Table 8. Recommended Operating Conditions

Symbol	Parameter	Min	Typ	Max	Unit
VDD11_C, VDD11_A, VDD11_R,VDD11_IO,VDD11_M	1.1V supply voltage	1.045	1.1	1.155	V
VDD18_A	1.8V supply voltage	1.71	1.8	1.89	V
VDDH_IO	1.8V-3.3V supply voltage	1.71	1.8/2.5/ 3.3	3.6	V
T_J	Operating junction temperature	-40	-	125	℃

3.3. Thermal Information

Table 9. Recommended Operating Conditions

Thermal Metric (Four-Layer Board)		Value	Unit
θ_{JA}	Junction-to-ambient thermal resistance	17.8	℃/W
θ_{JB}	Junction-to-board thermal resistance	5.1	℃/W
$\theta_{JC\text{-}Top}$	Junction-to-case(top) thermal resistance	6.2	℃/W
$\theta_{JC\text{-}Btm}$	Junction-to-case(bottom) thermal resistance	0.4	℃/W
Ψ_{JT}	Junction-to-top thermal characterization parameter	0.2	℃/W
Ψ_{JB}	Junction-to-board thermal characterization parameter	4.4	℃/W

Norelsys Confidential

4. DC Electrical Characteristics

4.1. Reference Clock Requirement

Table 10. Reference Clock Requirement

Parameter	Min	Typ	Max	Unit
Crystal frequency	-	25	-	MHz
Crystal frequency stability including aging	-100	-	100	ppm

4.2. HSMT Backward Channel Serial Outputs

Table 11. HSMT Backward Channel Serial Outputs

Parameter	Symbol	Conditions	Min	Typ	Max	Unit
Output Voltage Swing (Single-ended)	V_O	Peak-to-peak single-ended voltage	150	200	250	mV
Output Voltage Swing (Differential)	V_{ODT}	Peak-to-peak differential voltage	300	400	500	mV
Termination Resistance (Internal)	R_T			50		Ω

4.3. C-PHY and D-PHY LP Transmitter

Table 12. C-PHY and D-PHY LP Transmitter

Parameter	Symbol	Conditions	Min	Typ	Max	Unit
High-Level Output Voltage	V_{OH}		0.95	V_{DD11_M}	1.3	V
Low-Level Output Voltage	V_{OL}		-50	-	50	mV
Output Impedance	Z_{OLP}		110	-	-	Ω

Norelsys Confidential

4.4. D-PHY HS Transmitter

Table 13. D-PHY HS Transmitter

Parameter	Symbol	Conditions	Min	Typ	Max	Unit
HS Transmit Static Common-Mode Voltage	V_{CMTX}		150	200	250	mV
HS Transmit Differential Voltage	$\|V_{OD}\|$		140	200	270	mV
V_{OD} Mismatch when Output is Differential-1 or Differential-0	$\|\Delta V_{OD}\|$		-	-	14	mV
HS Output High Voltage	V_{OHHS}		-	-	360	mV
Single-Ended Output Impedance	Z_{OS}		40	50	62.5	Ω
Single-Ended Output Impedance Mismatch	ΔZ_{OS}		-	-	20	%

4.5. C-PHY HS Transmitter

Table 14. C-PHY HS Transmitter

Parameter	Symbol	Conditions	Min	Typ	Max	Unit
HS Transmit Static Common-Point Voltage	V_{CPTX}	Z_{ID} = 100Ω	175	-	310	mV
HS Transmit Differential Voltage of the Differential Strong 1 and Strong 0	$\|V_{OD}\|$ strong	Z_{ID} = 100Ω	-	-	300	mV
HS Transmit Differential Voltage of the Differential Weak 1 and Weak 0	$\|V_{OD}\|$ weak	Z_{ID} = 100Ω	90	-	-	mV
V_{OD} Mismatch Between the Absolute Values of the Differential Strong 1 and Strong 0 Output Voltages in any of the Six Possible High-Speed States	$\|\Delta V_{OD}\|$		-	-	17	mV
HS Output High Voltage	V_{OHHS}	Z_{ID} = 100Ω	-	-	425	mV
Single-Ended Output Impedance	Z_{OS}		40	50	60	Ω
Single-Ended Output Impedance Mismatch	ΔZ_{OS}		-	-	10	%

Norelsys Confidential

4.6. DC Characteristics for Digital IO

Table 15. DC Characteristics for Digital IO

Parameter	Symbol	Conditions	Min	Typ	Max	Unit
High-Level Input Voltage	V_{IH}	V_{DDH_IO}=1.8/2.5/3.3V	0.7 x V_{DDH_IO}			V
Low-Level Input Voltage	V_{IL}	V_{DDH_IO}=1.8V	-	-	0.5	V
		V_{DDH_IO}=2.5V			0.6	
		V_{DDH_IO}=3.3V			0.7	
High-Level Output Voltage	V_{OH}	V_{DDH_IO}=1.8V I_{OH} = -4mA	V_{DDH_IO} -0.45			V
		V_{DDH_IO}=2.5V I_{OH} = -4mA	V_{DDH_IO} -0.65			
		V_{DDH_IO}=3.3V I_{OH} = -4mA	V_{DDH_IO} -0.85			
Low-Level Output Voltage	V_{OL}	V_{DDH_IO}=1.8V I_{OL} = 4mA	-	-	0.45	V
		V_{DDH_IO}=2.5V I_{OL} = 4mA			0.5	
		V_{DDH_IO}=3.3V I_{OL} = 4mA			0.55	

4.7. Power Consumption Characteristics

Table 16. Power Consumption Characteristics

Typical values are at V_{DD18_A}=V_{DDH_IO}=1.8V, V_{DD11_A}=V_{DD11_R}=V_{DD11_C}=V_{DD11_M}=V_{DD11_IO}=1.1V, T_A=25 ℃.

Parameter	Symbol	Conditions	Min	Typ	Max	Unit
Supply Current	4x 6.4Gbps input 2x 4-lane output 2500Mbps/lane D-PHY	1V1		1140	TBD	mA
		1V8		75	TBD	
	4x 3.2Gbps input 2x 4-lane output 1500Mbps/lane D-PHY	1V1		TBD	TBD	mA
		1V8		TBD	TBD	

Norelsys Confidential

4.8. Power Up and Reset Timing

The Power Up and Reset Timing rules are defined in this section. Designers should follow all the rules for external power designs. Detailed explanations are listed as Figure 4.

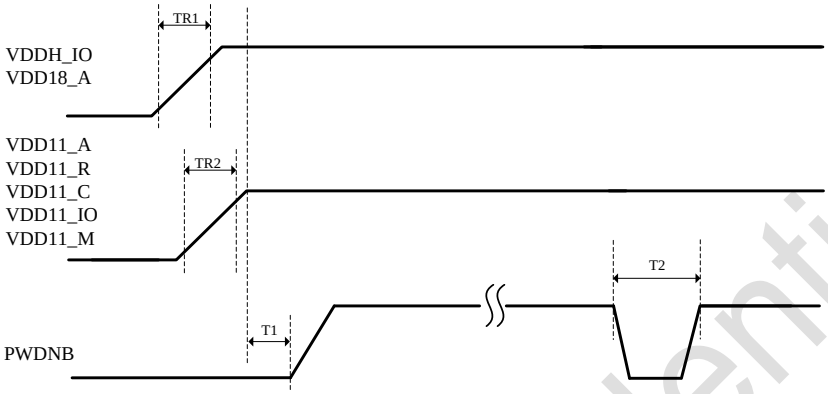

Figure 4. Power Up and Reset Timing

The recommended power sequence and timing requirements are listed as Table 17.

Table 17. Power Up and Reset Timing Requirement

Parameter	Min	Typ	Max	Unit
TR1: V_{DDH_IO}/ V_{DD18_A} rise time	0.1	-	-	ms
TR2: V_{DD11_A}/V_{DD11_R}/V_{DD11_C}/V_{DD11_IO}/V_{DD11_M} rise time	0.1	-	-	ms
T1: all power supplies stable to PWDNB	0	-	-	ms
T2: PWDNB Hard reset pulse width	100	-	-	us
T3: all power supplies stable to I2C ready	TBD	30		ms
T4: PWDNB to I2C ready	TBD	10		ms

Norelsys Confidential

5. AC Electrical Characteristics

5.1. C-PHY and D-PHY LP Transmitter

Table 18. C-PHY and D-PHY LP Transmitter (Note 1, 2, 3)

Parameter	Symbol	Conditions	Min	Typ	Max	Unit
15% to 85% Rise Time and Fall Time	t_{RLP}/t_{FLP}				25	ns
30% to 85% Rise Time and Fall Time	t_{REOT}				35	ns
Load Capacitance	C_{LOAD}		0		70	pF

5.2. D-PHY HS Transmitter

Table 19. D-PHY HS Transmitter (Note 1, 2)

Parameter	Symbol	Conditions	Min	Typ	Max	Unit
Common-Level Variations, HF	$\Delta V_{CMTX(HF)}$	> 450MHz			15	mV_{RMS}
Common-Level Variations, LF	$\Delta V_{CMTX(LF)}$	50MHz to 450MHz			25	mV_{PEAK}
20%-80% Rise Time and Fall Time	t_R and t_F				0.35	UI
			50			ps
Data Lane Bit Rate	DL_{BR}		80		2500	Mbps
Clock Lane Frequency	CL_{FREQ}		40		1250	MHz

5.3. D-PHY Data-Clock Timing

Table 20. D-PHY Data-Clock Timing (Note 1, 2)

Parameter	Symbol	Conditions	Min	Typ	Max	Unit
UI Instantaneous	U_{IINST}		0.4		12.5	ns
Data to Clock Skew	t_{SKEW}	0.08 to 1.0Gbps	-0.15		0.15	U_{IINST}
		> 1.0 to 1.5Gbps	-0.2		0.2	
Static Data to Clock Skew	t_{SKEW} Static	> 1.5Gbps	-0.2		0.2	U_{IINST}

Norelsys Confidential

5.4. D-PHY Global Operation Timing

Table 21. D-PHY Global Operation Timing (Note 1, 2)

Parameter	Symbol	Conditions	Min	Typ	Max	Unit
Transition from LP to HS Mode	$t_{CLK-PRE}$		8			UI
Time that the Transmitter Drives the Clock Lane LP-00 Line State Immediately Before the HS-0 Line State Starting the HS Transmission.	$t_{CLK-PREPARE}$		38		95	ns
$T_{CLK-PREPARE}$ + Time that the Transmitter Drives the HS-0 State Prior to Starting the Clock.	$t_{CLK-PREPARE}$ + $t_{CLK-ZERO}$		300			ns
Transmitted Time Interval from the Start of THS-TRAIL or TCLK-TRAIL, to the Start of the LP-11 State Following a HS Burst	t_{EOT}				105 + 12xUI	ns
Time that the Transmitter Drives LP-11 Following a HS Burst.	$t_{HS-EXIT}$		100			ns
Time that the Transmitter Drives the Data Lane LP-00 Line State Immediately Before the HS-0 Line State Starting the HS Transmission.	$t_{HS-PREPARE}$		40 + 4xUI		85 + 6xUI	ns
THS-PREPARE + Time that the Transmitter Drives the HS-0 State Prior to Transmitting the Sync Sequence.	$t_{HS-PREPARE}$ + $T_{HS-ZERO}$		145 + 10xUI			ns
Time that the Transmitter Drives the Flipped Differential State After Last Payload Data Bit of a HS Transmission Burst.	$t_{HS-TRAIL}$		60 + 4xUI			ns
Initialization Time.	t_{INIT}		100			µs
Transmitted Length of any Low-Power State Period.	t_{LPX}		50			ns
Time that the Transmitter Drives the Skew-Calibration Sync Pattern, 0xFFFF.	$t_{SKEWCAL_SYNC}$			16		UI
Time that the Transmitter Drives the Skew-Calibration Pattern in the Initial Skew-Calibration Mode.	$t_{SKEWCAL}$				100	µs
			2^{15}			UI
Time that the Transmitter Drives the Skew-Calibration Pattern in the Periodic Skew-Calibration Mode.	$t_{SKEWCAL}$				10	µs
			2^{10}			UI

Norelsys Confidential

5.5. C-PHY HS Transmitter

Table 22. C-PHY HS Transmitter (Note 1, 3)

Parameter	Symbol	Conditions	Min	Typ	Max	Unit
Common-Level Variations	$\Delta V_{CPTX(HF)}$	> 450MHz			15	mV_{RMS}
	$\Delta V_{CPTX(LF)}$	50MHz to 450MHz			25	mV_{PEAK}
C-PHY Lane Bit Rate	C_{BR}		182		5700	Mbps
UI Instantaneous	U_{IINST}		0.4		12.5	ns

5.6. C-PHY Global Operation Timing

Table 23. C-PHY Global Operation Timing (Note 1, 3)

Parameter	Symbol	Conditions	Min	Typ	Max	Unit
Time that the transmitter drives the 3-wire LP-000 Line state immediately before the start of the HS transmission.	$t_{3\text{-}PREPARE}$		38		95	ns
Time that the Transmitter drives LP-111 following a HS burst	$t_{HS\text{-}EXIT}$		100			ns
Transmitted length of any low-power state period	t_{LPX}		50			ns
Initialization Time	t_{INIT}		100			µs

5.7. I2C Master Timing

Table 24. I2C Master Timing (Note 1)

Parameter	Symbol	Conditions	Min	Type	Max	Unit
SCL Clock Frequency	f_{SCL}	Low f_{SCL}		100		kHz
		Mid f_{SCL}		400		
		High f_{SCL}		833		
SCL Clock Period	t_{SCL}			$1/f_{SCL}$		ns
Low Period of SCL Clock	t_{LOW}		0.5			t_{SCL}
High Period of SCL Clock	t_{HIGH}		0.5			t_{SCL}
Data Hold Time	$t_{HD:DAT}$	Low f_{SCL}	0			ns
		Mid f_{SCL}	0			

Norelsys Confidential

		High f_{SCL}	0			
Data Setup Time	$t_{SU:DAT}$	Low f_{SCL}	250			ns
		Mid f_{SCL}	100			
		High f_{SCL}	50			

5.8. I2C Slave Timing

Table 25. I2C Slave Timing (Note 1)

Parameter	Symbol	Conditions	Min	Type	Max	Unit
SCL Clock Frequency	f_{SCL}	Low f_{SCL}		100		kHz
		Mid f_{SCL}		400		
		High f_{SCL}		1000		
SCL Clock Period	t_{SCL}			$1/f_{SCL}$		ns
Low Period of SCL Clock	t_{LOW}	Low f_{SCL}	4.7			us
		Mid f_{SCL}	1.3			
		High f_{SCL}	0.52			
High Period of SCL Clock	t_{HIGH}	Low f_{SCL}	4			us
		Mid f_{SCL}	0.6			
		High f_{SCL}	0.3			
Data Hold Time	$t_{HD:DAT}$	Low f_{SCL}	0			ns
		Mid f_{SCL}	0			
		High f_{SCL}	0			
Data Setup Time	$t_{SU:DAT}$	Low f_{SCL}	250			ns
		Mid f_{SCL}	100			
		High f_{SCL}	40			
Rise time of both SDA and SCL	t_r	Low f_{SCL}			1000	ns
		Mid f_{SCL}	20		300	
		High f_{SCL}	10		120	
Fall time of both SDA and SCL	t_f	Low f_{SCL}			300	ns
		Mid f_{SCL}	20		300	
		High f_{SCL}	10		120	

Norelsys Confidential

5.9. SPI Master Timing

Table 26. SPI Master (Note 1)

Parameter	Symbol	Conditions	Min	Typ	Max	Unit
Programmable Operating Frequency Range	f_{MCK}				50	MHz
SCLK Period	t_{MCK}			$1/f_{MCK}$		ns
SCLK Output Pulse-Width High/Low	t_{MCH}, t_{MCL}			$t_{MCK}/2$		ns
MOSI Data Output Delay	t_{MOD}	After SCLK falling edge	TBD		TBD	ns
MISO Input Setup Time	t_{MIS}	Before programmed sampling edge	TBD			ns
MISO Input Hold Time	t_{MIH}	After programmed sampling edge	TBD			ns

5.10. SPI Slave Timing

Table 27. SPI Slave (Note 1)

Parameter	Symbol	Conditions	Min	Typ	Max	Unit
Operating Frequency	f_{SCK}				50	MHz
SCLK Period	t_{SCK}			$1/f_{SCK}$		ns
MISO Data Output Delay	t_{SOD}	After SCLK falling edge	TBD		TBD	ns
MOSI Input Setup Time	t_{SIS}	Before SCLK rising edge	TBD			ns
MOSI Input Hold Time	t_{SIH}	After SCLK rising edge	TBD			ns

5.11. ESD Protection

Table 28. ESD Protection

Standards	Items	Typ
AEC Q100-002 HBM	Human-body model (HBM) on all high-speed I/O	+/- 4kV
	Human-body model (HBM) on other pins	+/- 4kV
AEC Q100-011 CDM	Charged-device model (CDM)	+/- 750V
IEC 61000-4-2 RD = 330, Cs=150pF	Contact Discharge (all high-speed I/O)	+/- 8kV
	Air Discharge (all high-speed I/O)	+/- 15kV
ISO10605 RD=330, Cs=150/330pF, RD=2k,Cs=150/330pF	Contact Discharge (all high-speed I/O)	+/- 8kV
	Air Discharge (all high-speed I/O)	+/- 15kV

Note 1: Not production tested.

Note 2: Refer to D-PHY Specification v1.2

Note 3: Refer to C-PHY Specification v1.0

Norelsys Confidential

6. Package Information

6.1. 76 Pin QFN (9x9mm) Package

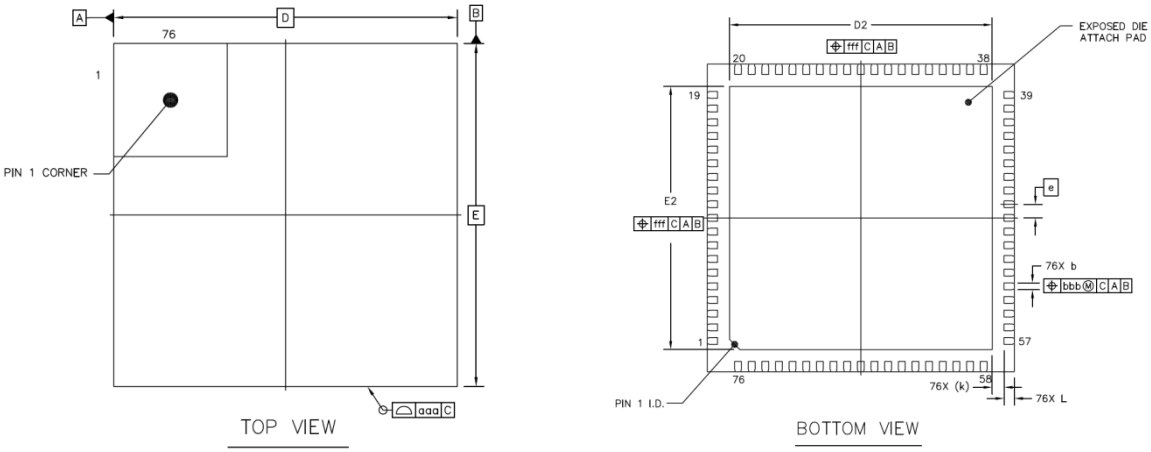

Figure 5. 76 Pin QFN Package Outline

Table 29. 76 Pin QFN Package Mechanical Data

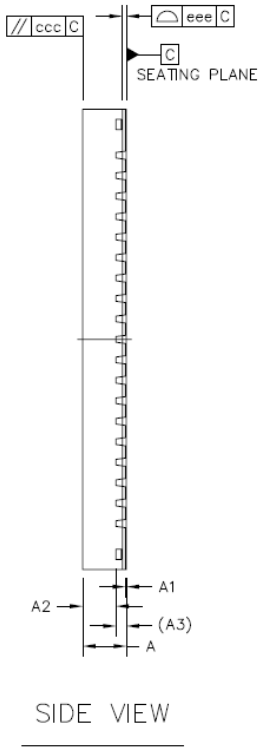

		SYMBOL	MIN	NOM	MAX
TOTAL THICKNESS		A	0.8	0.85	0.9
STAND OFF		A1	0	0.02	0.05
MOLD THICKNESS		A2	---	0.65	---
L/F THICKNESS		A3	0.203 REF		
LEAD WIDTH		b	0.15	0.2	0.25
BODY SIZE	X	D	9 BSC		
	Y	E	9 BSC		
LEAD PITCH		e	0.4 BSC		
EP SIZE	X	D2	7.6	7.7	7.8
	Y	E2	7.6	7.7	7.8
LEAD LENGTH		L	0.2	0.3	0.4
LEAD TIP TO EXPOSED PAD EDGE		K	0.35 REF		
PACKAGE EDGE TOLERANCE		aaa	0.1		
MOLD FLATNESS		ccc	0.1		
COPLANARITY		eee	0.08		
LEAD OFFSET		bbb	0.07		
EXPOSED PAD OFFSET		fff	0.1		

7. Ordering Information

7.1. Orderable Part Number Table

Table 30. Ordering Information

Ordering Number	Package Type	Pins	Side-Wettable	Quantity
NS6603FPO	QFN 9x9mm	76	No	1000

7.2. Top Marking

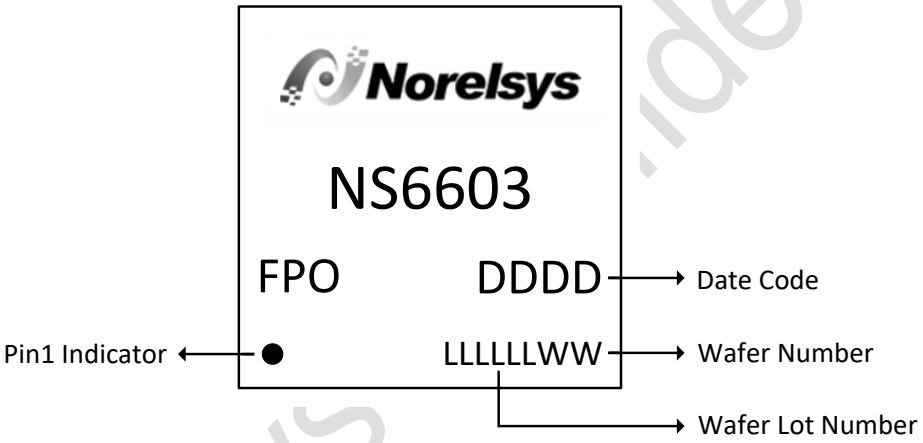

Figure 6. NS6603 Top Marking

Norelsys Confidential