ESD7016, SZESD7016

ESD Protection Diode

Low Capacitance, USB 3.0

The ESD7016 surge protection is specifically designed to protect USB3.0 interfaces by integrating two Superspeed pairs, D+, D−, and Vbus lines into a single protection product. Ultra−low capacitance and low ESD clamping voltage make this device an ideal solution for protecting voltage sensitive high speed data lines. The flow−through style package allows for easy PCB layout and matched trace lengths necessary to maintain consistent impedance between high speed differential lines.

Features

- Low Capacitance (0.15 pF Typical, I/O to GND)
- Protection for the Following IEC Standards:
  IEC 61000−4−2 (Level 4)
- Low ESD Clamping Voltage
- SZ Prefix for Automotive and Other Applications Requiring Unique Site and Control Change Requirements; AEC−Q101 Qualified and PPAP Capable
- This is a Pb−Free Device

Typical Applications

- USB 3.0

MAXIMUM RATINGS (T_J = 25°C unless otherwise noted)

Rating	Symbol	Value	Unit
Operating Junction Temperature Range	T_J	−55 to +125	°C
Storage Temperature Range	T_{stg}	−55 to +150	°C
Lead Solder Temperature − Maximum (10 Seconds)	T_L	260	°C
IEC 61000−4−2 Contact (ESD) IEC 61000−4−2 Air (ESD)	ESD ESD	±15 ±15	kV kV

Stresses exceeding those listed in the Maximum Ratings table may damage the device. If any of these limits are exceeded, device functionality should not be assumed, damage may occur and reliability may be affected.

ON Semiconductor®

www.onsemi.com

MARKING DIAGRAM

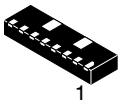

UDFN8
CASE 517CB

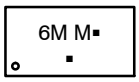

6M = Specific Device Code
M = Date Code
▪ = Pb−Free Package
(Note: Microdot may be in either location)

PIN CONFIGURATION AND SCHEMATIC

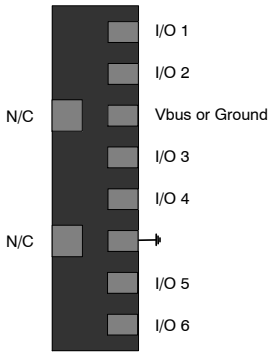

ORDERING INFORMATION

Device	Package	Shipping
ESD7016MUTAG	UDFN8 (Pb−Free)	3000 / Tape & Reel
SZESD7016MUTAG	UDFN8 (Pb−Free)	3000 / Tape & Reel

†For information on tape and reel specifications, including part orientation and tape sizes, please refer to our Tape and Reel Packaging Specification Brochure, BRD8011/D.

© Semiconductor Components Industries, LLC, 2013

ELECTRICAL CHARACTERISTICS (T_A = 25°C unless otherwise specified)

Parameter	Symbol	Conditions	Min	Typ	Max	Unit
Reverse Working Voltage	V_{RWM}	I/O Pin to GND			5.0	V
Breakdown Voltage	V_{BR}	I_T = 1 mA, I/O Pin to GND	5.5			V
Reverse Leakage Current	I_R	V_{RWM} = 5 V, I/O Pin to GND			1.0	μA
Clamping Voltage (Note 1)	V_C	I_{PP} = 1 A, I/O Pin to GND (8 x 20 μs pulse)			10	V
Clamping Voltage (Note 2)	V_C	IEC61000−4−2, ±8 kV Contact	See Figures 1 and 2			V
Clamping Voltage TLP (Note 3) See Figures 6 through 9	V_C	I_{PP} = ±8 A I_{PP} = ±16 A		14.6 20.5		
Junction Capacitance	C_J	V_R = 0 V, f = 1 MHz between I/O Pins and GND		0.15	0.20	pF
Junction Capacitance Difference	ΔC_J	V_R = 0 V, f = 1 MHz between I/O Pins and GND		0.03		pF

1. Surge current waveform per Figure 5.
2. For test procedure see Figures 3 and 4 and application note AND8307/D.
3. ANSI/ESD STM5.5.1 − Electrostatic Discharge Sensitivity Testing using Transmission Line Pulse (TLP) Model.
   TLP conditions: Z_0 = 50 Ω, t_p = 100 ns, t_r = 4 ns, averaging window; t_1 = 30 ns to t_2 = 60 ns.

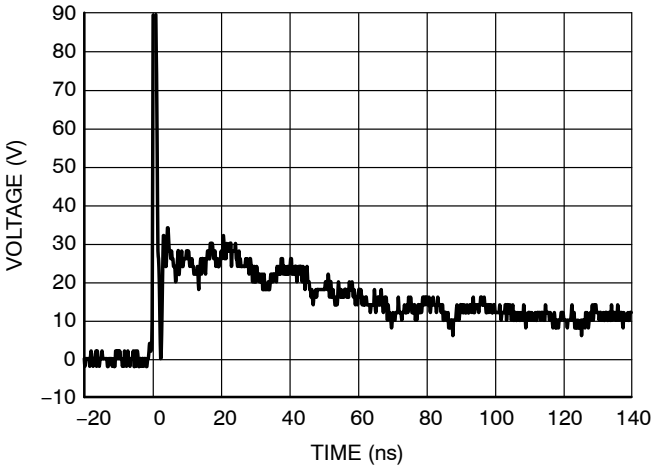

Figure 1. IEC61000−4−2 +8 KV Contact Clamping Voltage

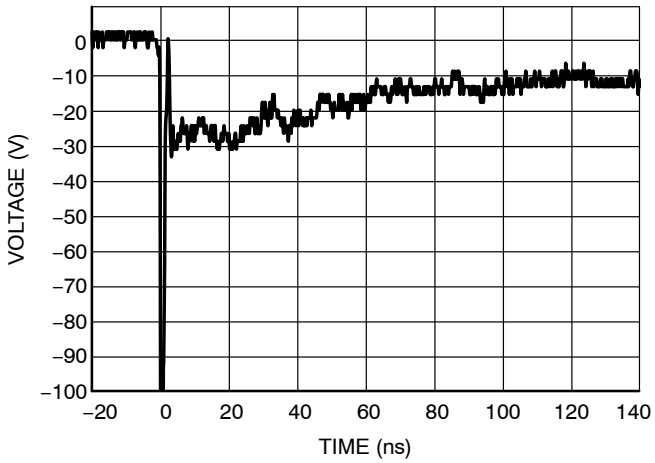

Figure 2. IEC61000−4−2 −8 KV Contact Clamping Voltage

IEC 61000−4−2 Spec.

Level	Test Voltage (kV)	First Peak Current (A)	Current at 30 ns (A)	Current at 60 ns (A)
1	2	7.5	4	2
2	4	15	8	4
3	6	22.5	12	6
4	8	30	16	8

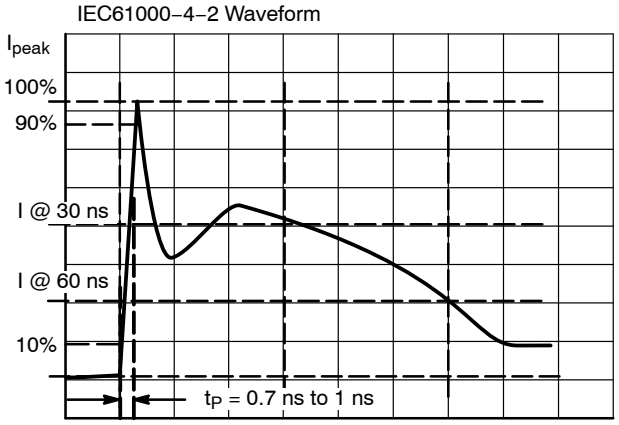

Figure 3. IEC61000−4−2 Spec

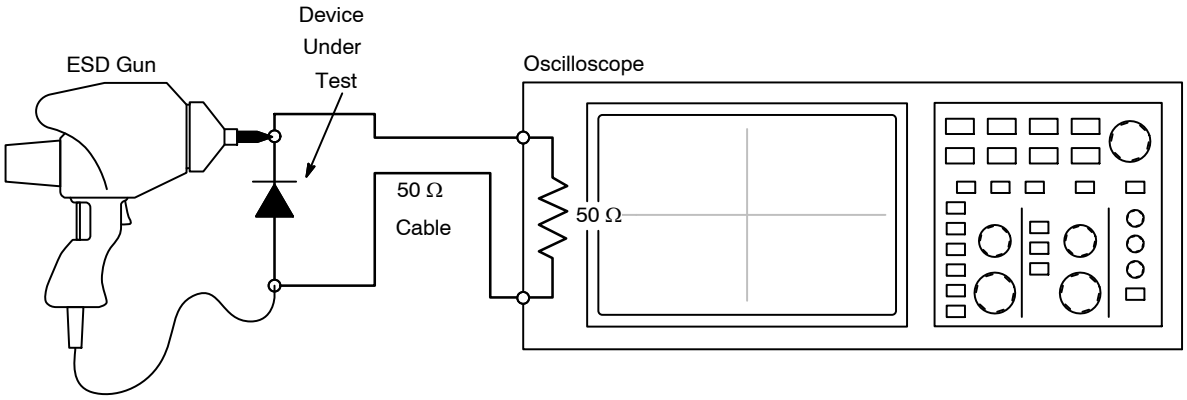

Figure 4. Diagram of ESD Clamping Voltage Test Setup

The following is taken from Application Note AND8308/D − Interpretation of Datasheet Parameters for ESD Devices.

ESD Voltage Clamping

For sensitive circuit elements it is important to limit the voltage that an IC will be exposed to during an ESD event to as low a voltage as possible. The ESD clamping voltage is the voltage drop across the ESD protection diode during an ESD event per the IEC61000−4−2 waveform. Since the IEC61000−4−2 was written as a pass/fail spec for larger systems such as cell phones or laptop computers it is not clearly defined in the spec how to specify a clamping voltage at the device level. ON Semiconductor has developed a way to examine the entire voltage waveform across the ESD protection diode over the time domain of an ESD pulse in the form of an oscilloscope screenshot, which can be found on the datasheets for all ESD protection diodes. For more information on how ON Semiconductor creates these screenshots and how to interpret them please refer to AND8307/D and AND8308/D.

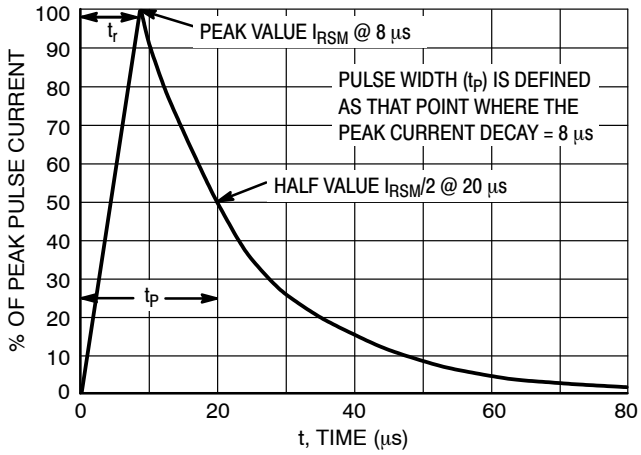

Figure 5. 8 x 20 μs Pulse Waveform

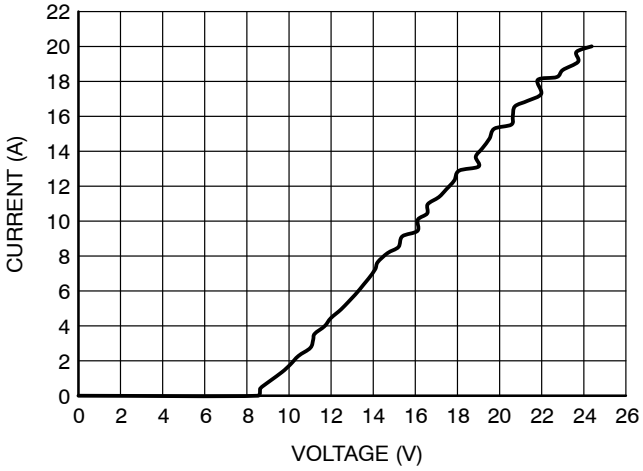

Figure 6. Positive TLP I−V Curve

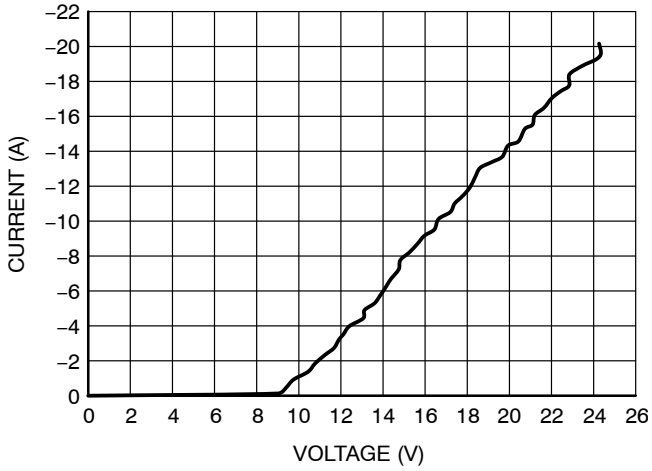

Figure 7. Negative TLP I−V Curve

Transmission Line Pulse (TLP) Measurement

Transmission Line Pulse (TLP) provides current versus voltage (I−V) curves in which each data point is obtained from a 100 ns long rectangular pulse from a charged transmission line. A simplified schematic of a typical TLP system is shown in Figure 8. TLP I−V curves of ESD protection devices accurately demonstrate the product's ESD capability because the 10s of amps current levels and under 100 ns time scale match those of an ESD event. This is illustrated in Figure 9 where an 8 kV IEC 61000−4−2 current waveform is compared with TLP current pulses at 8 A and 16 A. A TLP I−V curve shows the voltage at which the device turns on as well as how well the device clamps voltage over a range of current levels.

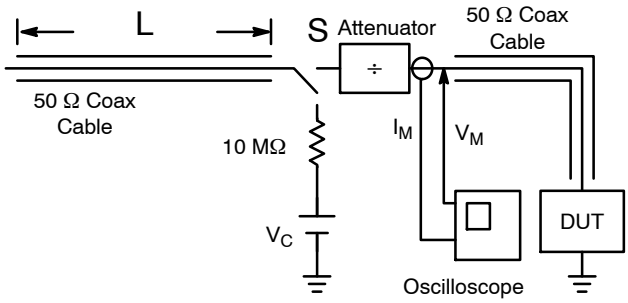

Figure 8. Simplified Schematic of a Typical TLP System

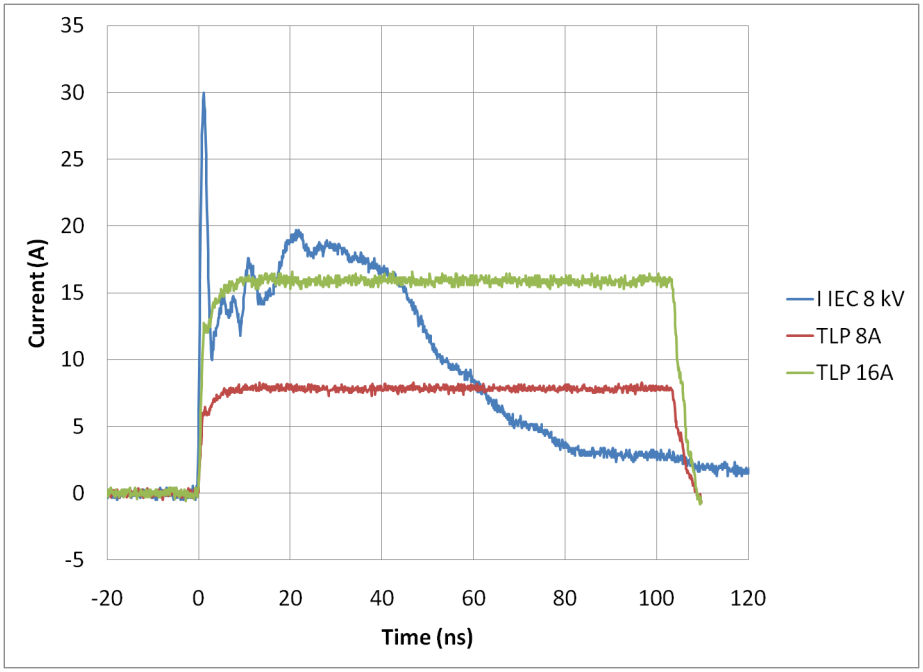

Figure 9. Comparison Between 8 kV IEC 61000−4−2 and 8 A and 16 A TLP Waveforms

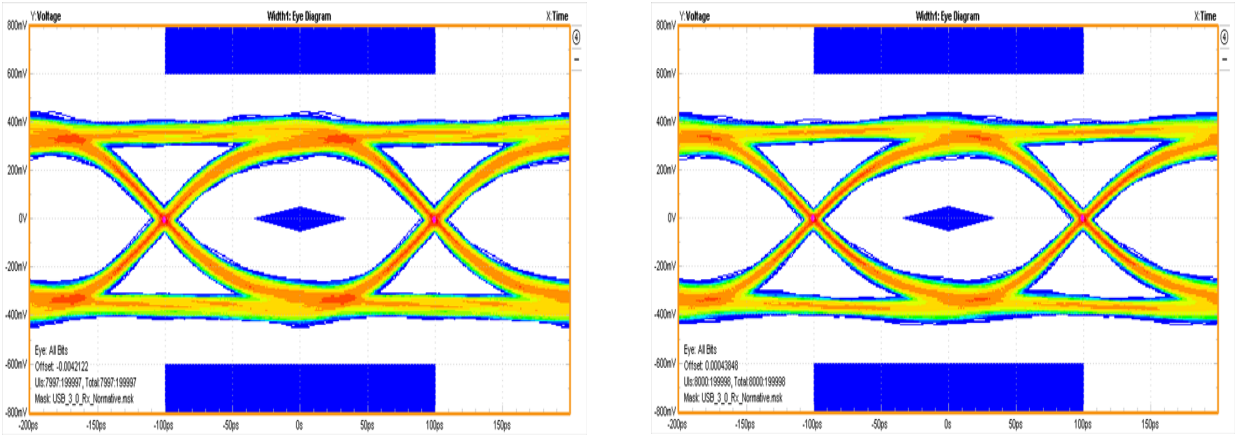

Figure 10. USB3.0 Eye Diagram with and without ESD7016, 5 Gb/s

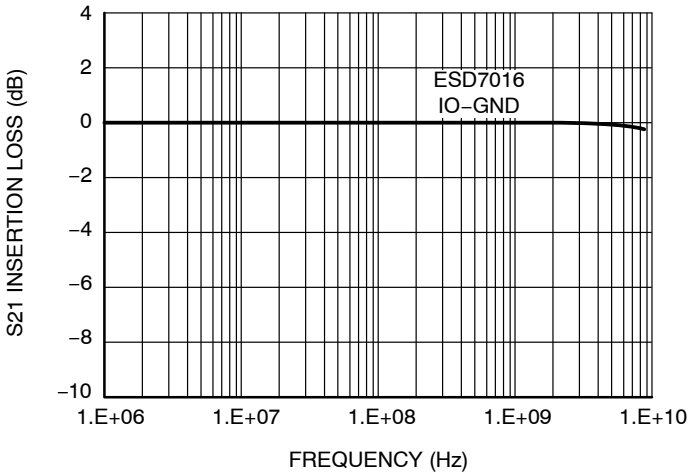

Figure 11. ESD7016 Insertion Loss

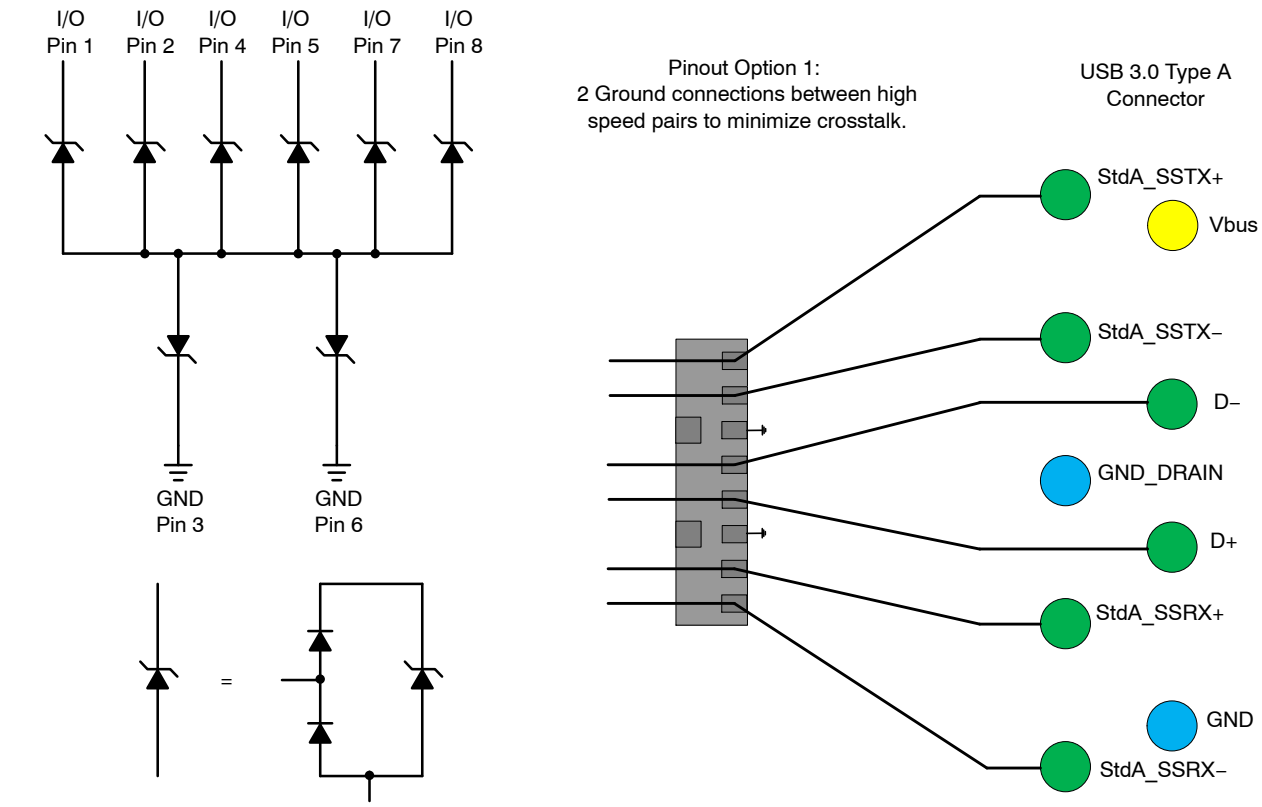

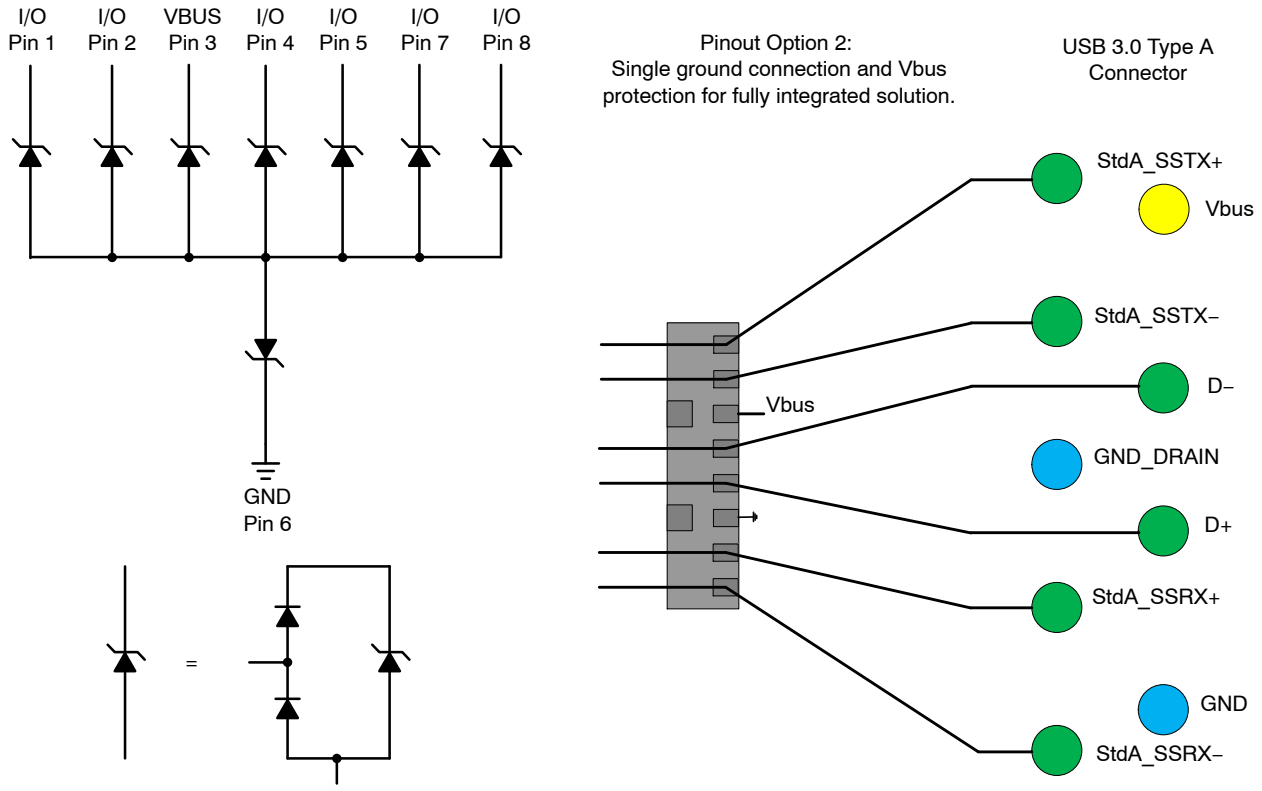

Figure 12. USB3.0 Type A Connector Layout Diagrams

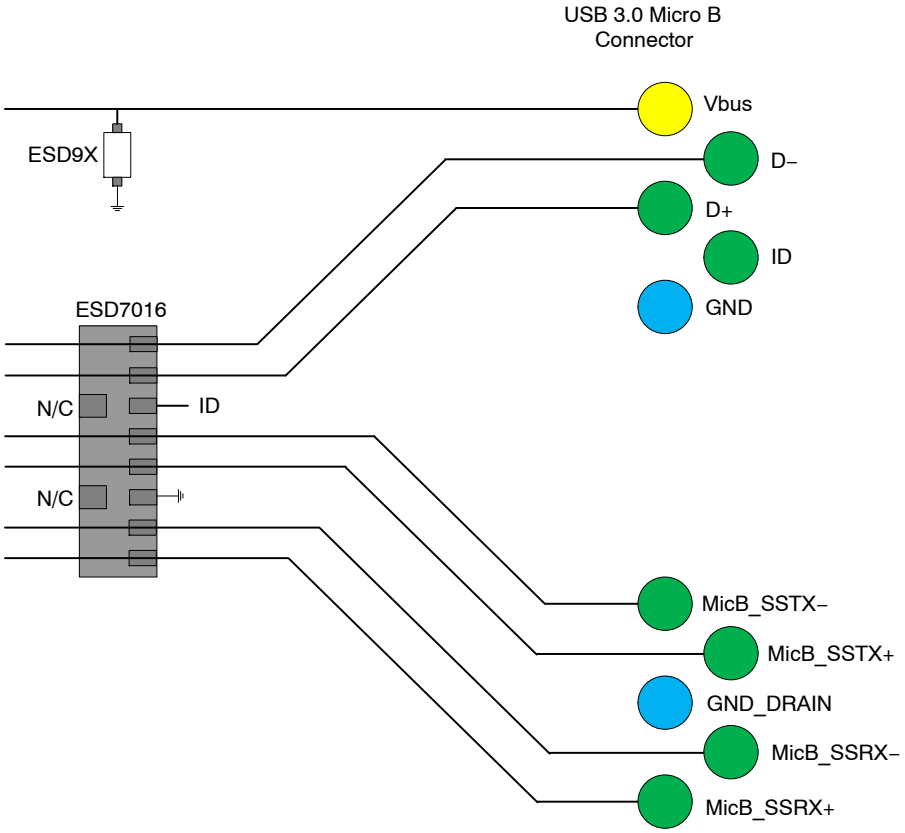

Figure 13. USB3.0 Micro B Connector Layout Diagram

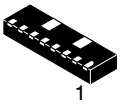

1

SCALE 4:1

UDFN8, 3.3x1.0, 0.4P
CASE 517CB
ISSUE O

DATE 27 SEP 2011

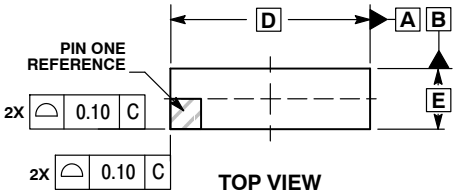

TOP VIEW

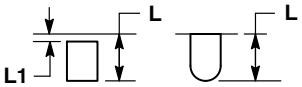

DETAIL A
ALTERNATE CONSTRUCTIONS

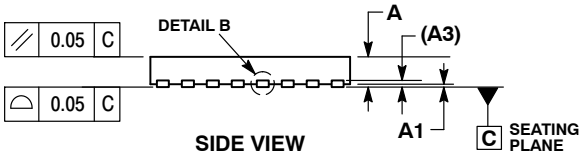

SIDE VIEW

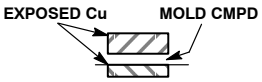

DETAIL B
ALTERNATE CONSTRUCTION

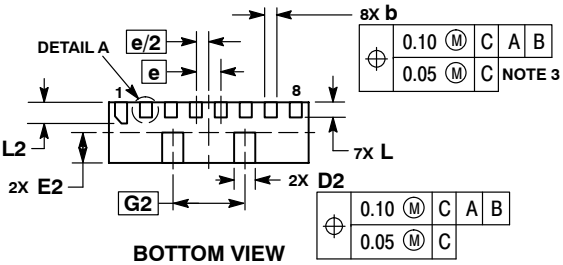

BOTTOM VIEW

NOTES:
1. DIMENSIONING AND TOLERANCING PER ASME Y14.5M, 1994.
2. CONTROLLING DIMENSION: MILLIMETERS.
3. DIMENSION b APPLIES TO PLATED TERMINAL AND IS MEASURED BETWEEN 0.15 AND 0.20 MM FROM TERMINAL TIP.

DIM	MILLIMETERS MIN	MAX
A	0.45	0.55
A1	0.00	0.05
A3	0.13 REF	
b	0.15	0.25
D	3.30 BSC	
D2	0.25	0.45
E	1.00 BSC	
E2	0.45	0.55
e	0.40 BSC	
G2	1.19 BSC	
L	0.20	0.30
L1	---	0.15
L2	0.30	0.40

GENERIC MARKING DIAGRAM*

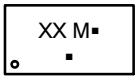

XX = Specific Device Code
M = Date Code
▪ = Pb−Free Package
(Note: Microdot may be in either location)

*This information is generic. Please refer to device data sheet for actual part marking. Pb−Free indicator, "G" or microdot " ▪", may or may not be present.

RECOMMENDED SOLDERING FOOTPRINT*

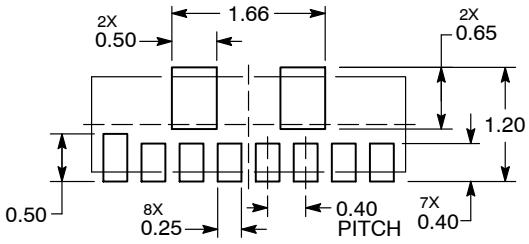

DIMENSION: MILLIMETERS

*For additional information on our Pb−Free strategy and soldering details, please download the ON Semiconductor Soldering and Mounting Techniques Reference Manual, SOLDERRM/D.

DOCUMENT NUMBER:	98AON59259E	Electronic versions are uncontrolled except when accessed directly from the Document Repository. Printed versions are uncontrolled except when stamped "CONTROLLED COPY" in red.
DESCRIPTION:	UDFN8, 3.3X1.0, 0.4P	PAGE 1 OF 1

ON Semiconductor and ON are trademarks of Semiconductor Components Industries, LLC dba ON Semiconductor or its subsidiaries in the United States and/or other countries. ON Semiconductor reserves the right to make changes without further notice to any products herein. ON Semiconductor makes no warranty, representation or guarantee regarding the suitability of its products for any particular purpose, nor does ON Semiconductor assume any liability arising out of the application or use of any product or circuit, and specifically disclaims any and all liability, including without limitation special, consequential or incidental damages. ON Semiconductor does not convey any license under its patent rights nor the rights of others.

© Semiconductor Components Industries, LLC, 2019

onsemi, onsemi, and other names, marks, and brands are registered and/or common law trademarks of Semiconductor Components Industries, LLC dba "**onsemi**" or its affiliates and/or subsidiaries in the United States and/or other countries. **onsemi** owns the rights to a number of patents, trademarks, copyrights, trade secrets, and other intellectual property. A listing of **onsemi**'s product/patent coverage may be accessed at www.onsemi.com/site/pdf/Patent−Marking.pdf. **onsemi** reserves the right to make changes at any time to any products or information herein, without notice. The information herein is provided "as−is" and **onsemi** makes no warranty, representation or guarantee regarding the accuracy of the information, product features, availability, functionality, or suitability of its products for any particular purpose, nor does **onsemi** assume any liability arising out of the application or use of any product or circuit, and specifically disclaims any and all liability, including without limitation special, consequential or incidental damages. Buyer is responsible for its products and applications using **onsemi** products, including compliance with all laws, regulations and safety requirements or standards, regardless of any support or applications information provided by **onsemi**. "Typical" parameters which may be provided in **onsemi** data sheets and/or specifications can and do vary in different applications and actual performance may vary over time. All operating parameters, including "Typicals" must be validated for each customer application by customer's technical experts. **onsemi** does not convey any license under any of its intellectual property rights nor the rights of others. **onsemi** products are not designed, intended, or authorized for use as a critical component in life support systems or any FDA Class 3 medical devices or medical devices with a same or similar classification in a foreign jurisdiction or any devices intended for implantation in the human body. Should Buyer purchase or use **onsemi** products for any such unintended or unauthorized application, Buyer shall indemnify and hold **onsemi** and its officers, employees, subsidiaries, affiliates, and distributors harmless against all claims, costs, damages, and expenses, and reasonable attorney fees arising out of, directly or indirectly, any claim of personal injury or death associated with such unintended or unauthorized use, even if such claim alleges that **onsemi** was negligent regarding the design or manufacture of the part. **onsemi** is an Equal Opportunity/Affirmative Action Employer. This literature is subject to all applicable copyright laws and is not for resale in any manner.

PUBLICATION ORDERING INFORMATION

LITERATURE FULFILLMENT:
Email Requests to: orderlit@onsemi.com

onsemi Website: www.onsemi.com

TECHNICAL SUPPORT
North American Technical Support:
Voice Mail: 1 800−282−9855 Toll Free USA/Canada
Phone: 011 421 33 790 2910

Europe, Middle East and Africa Technical Support:
Phone: 00421 33 790 2910
For additional information, please contact your local Sales Representative

◊