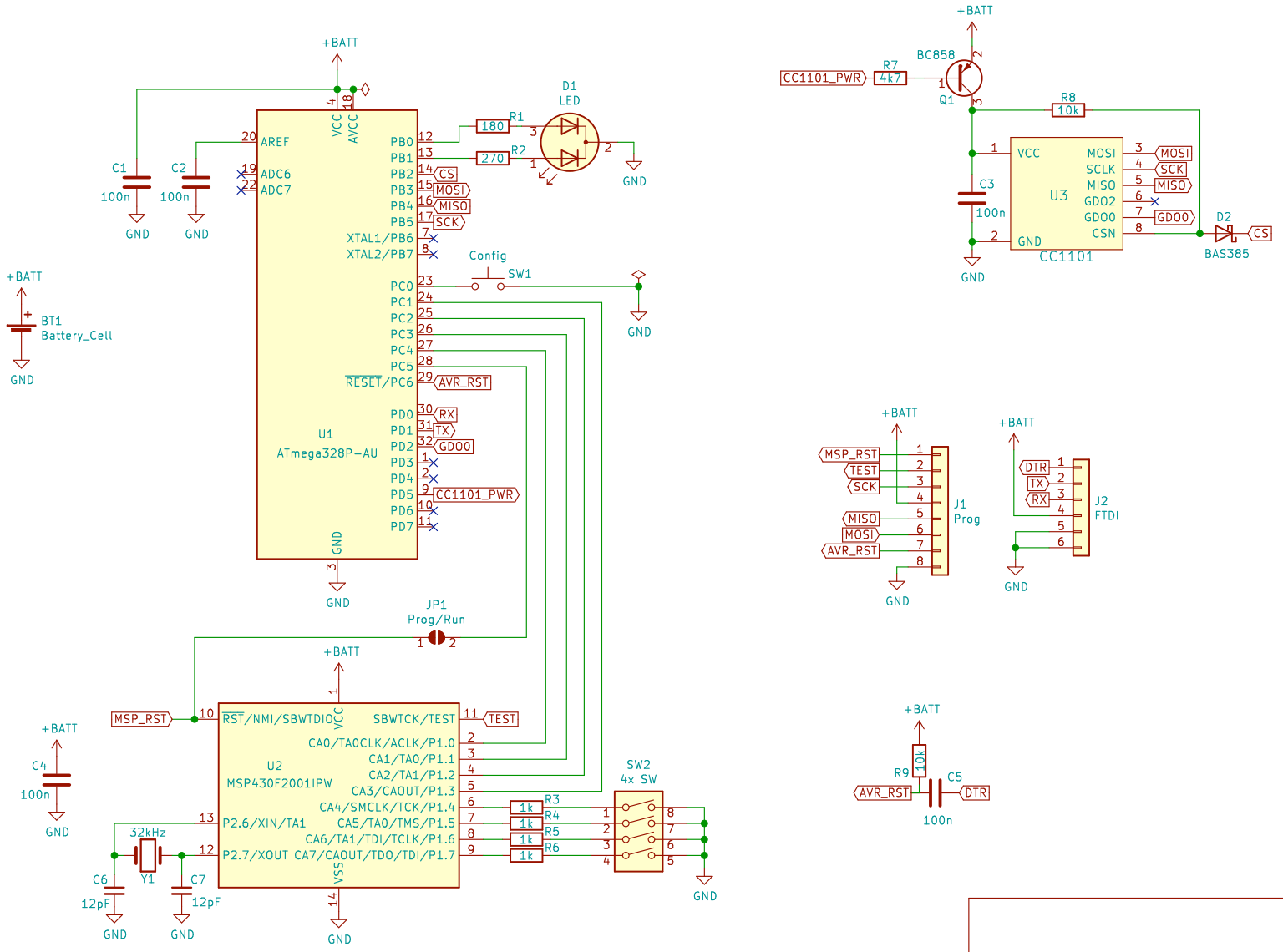

Sheet: /
File: HB-SCI-x-MSP.sch

Title:

Size: A4	Date:	**Rev:**
KiCad E.D.A. kicad (5.1.9-0-10_14)		Id: 1/1