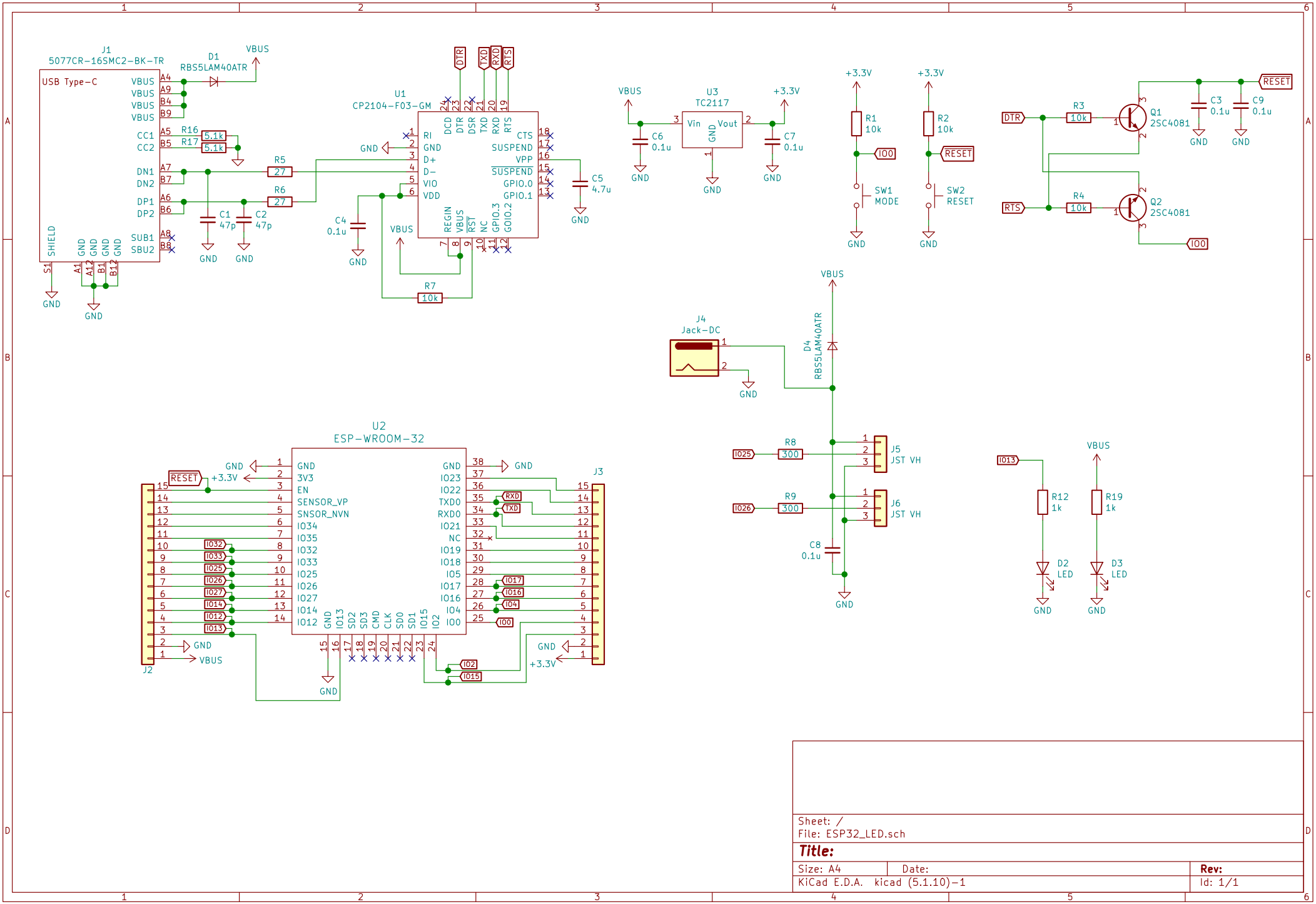
J1
5077CR-16SMC2-BK-TR
USB Type-C
D1
RBS5LAM40ATR
VBUS
R16
5.1k
R17
5.1k
R5
27
R6
27
C1
47p
C2
47p
U1
CP2104-F03-GM
DTR
TXD
RXD
RTS
DCD
DSR
RI
GND
D+
D-
VIO
VDD
REGIN
CTS
SUSPEND
VPP
GPIO.0
GPIO.1
GPIO.3
GPIO.2
NC
C4
0.1u
C5
4.7u
R7
10k
U3
TC2117
Vin
Vout
C6
0.1u
C7
0.1u
+3.3V
R1
10k
R2
10k
SW1
MODE
SW2
RESET
R3
10k
R4
10k
Q1
2SC4081
Q2
2SC4081
C3
0.1u
C9
0.1u
IO0
J4
Jack-DC
D4
RBS5LAM40ATR
R8
300
R9
300
J5
JST VH
J6
JST VH
C8
0.1u
R12
1k
R19
1k
D2
LED
D3
LED
U2
ESP-WROOM-32
3V3
EN
SENSOR_VP
SNSOR_NVN
IO34
IO35
IO32
IO33
IO25
IO26
IO27
IO14
IO12
IO13
SD2
SD3
CMD
CLK
SD0
SD1
IO15
IO2
IO23
IO22
TXD0
RXD0
IO21
IO19
IO18
IO5
IO17
IO16
IO4
J2
J3
Sheet: /
File: ESP32_LED.sch
Title:
Size: A4
Date:
Rev:
KiCad E.D.A. kicad (5.1.10)-1
Id: 1/1