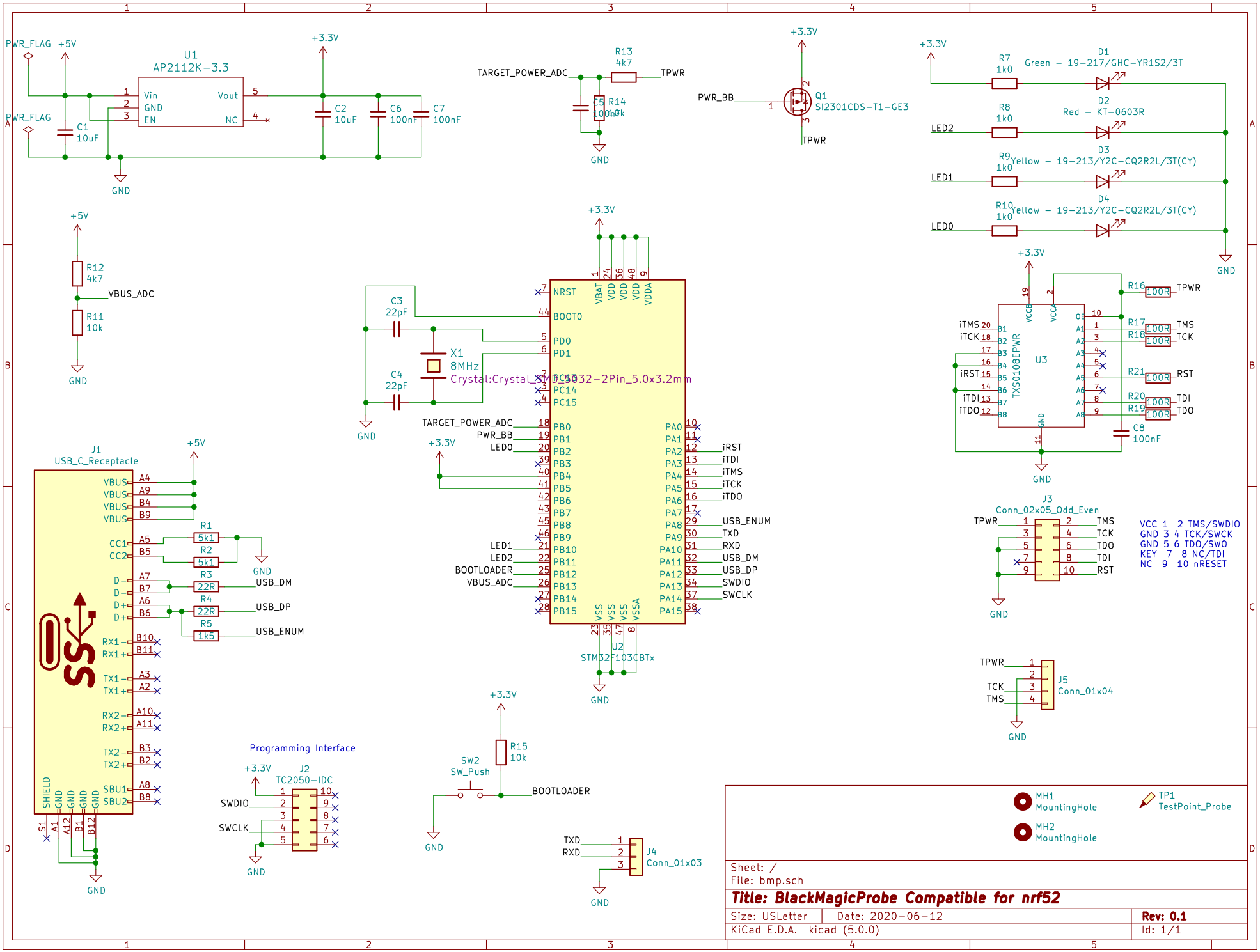
U1
AP2112K-3.3
Vin
GND
EN
Vout
NC
PWR_FLAG
+5V
+3.3V
C1 10uF
C2 10uF
C6 100nF
C7 100nF
R13 4k7
R14 10k
C5 100nF
TARGET_POWER_ADC
TPWR
Q1
SI2301CDS-T1-GE3
PWR_BB
R7 1k0
R8 1k0
R9 1k0
R10 1k0
D1 Green - 19-217/GHC-YR1S2/3T
D2 Red - KT-0603R
D3 Yellow - 19-213/Y2C-CQ2R2L/3T(CY)
D4 Yellow - 19-213/Y2C-CQ2R2L/3T(CY)
LED2
LED1
LED0
R12 4k7
R11 10k
VBUS_ADC
C3 22pF
C4 22pF
X1
8MHz
Crystal:Crystal_SMD_5032-2Pin_5.0x3.2mm
NRST
BOOT0
PD0
PD1
PC14
PC15
PB0
PB1
PB2
PB3
PB4
PB5
PB6
PB7
PB8
PB9
PB10
PB11
PB12
PB13
PB14
PB15
PA0
PA1
PA2
PA3
PA4
PA5
PA6
PA7
PA8
PA9
PA10
PA11
PA12
PA13
PA14
PA15
VBAT
VDD
VDDA
VSS
VSSA
iRST
iTDI
iTMS
iTCK
iTDO
USB_ENUM
TXD
RXD
USB_DM
USB_DP
SWDIO
SWCLK
BOOTLOADER
U2
STM32F103CBTx
U3
TXS0108EPWR
VCCA
VCCB
OE
R16 100R
R17 100R
R18 100R
R21 100R
R20 100R
R19 100R
C8 100nF
J1
USB_C_Receptacle
VBUS
CC1
CC2
D-
D+
RX1-
RX1+
TX1-
TX1+
RX2-
RX2+
TX2-
TX2+
SBU1
SBU2
SHIELD
R1 5k1
R2 5k1
R3 22R
R4 22R
R5 1k5
J3
Conn_02x05_Odd_Even
VCC 1 2 TMS/SWDIO
GND 3 4 TCK/SWCK
GND 5 6 TDO/SWO
KEY 7 8 NC/TDI
NC 9 10 nRESET
J5
Conn_01x04
Programming Interface
J2
TC2050-IDC
SW2
SW_Push
R15 10k
J4
Conn_01x03
MH1
MountingHole
MH2
MountingHole
TP1
TestPoint_Probe
Sheet: /
File: bmp.sch
Title: BlackMagicProbe Compatible for nrf52
Size: USLetter
Date: 2020-06-12
Rev: 0.1
KiCad E.D.A. kicad (5.0.0)
Id: 1/1