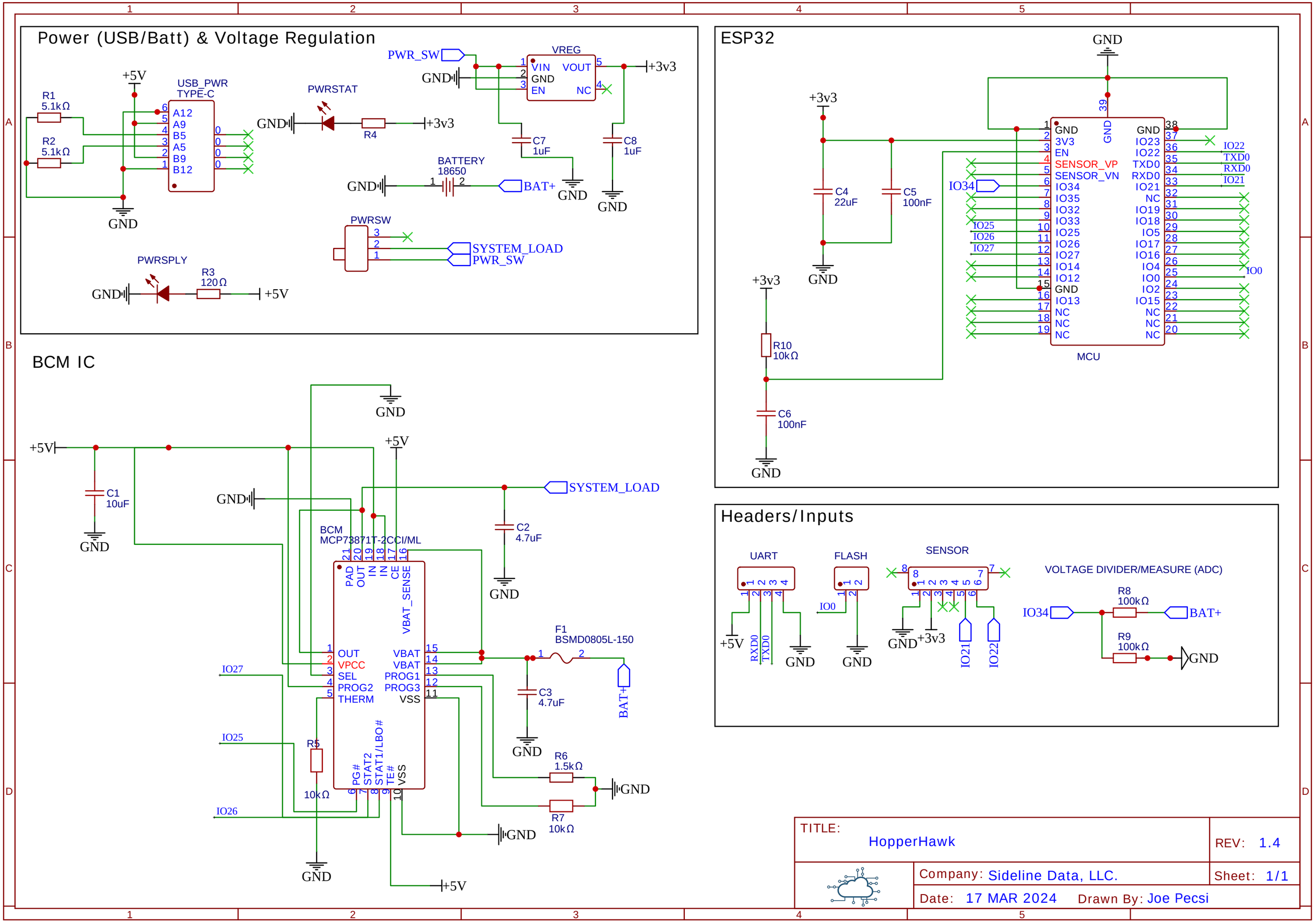
Power (USB/Batt) & Voltage Regulation
+5V
R1
5.1kΩ
R2
5.1kΩ
USB_PWR
TYPE-C
A12
A9
B5
A5
B9
B12
GND
PWRSTAT
R4
+3v3
PWR_SW
VREG
VIN
GND
EN
VOUT
NC
C7
1uF
C8
1uF
BATTERY
18650
BAT+
PWRSW
SYSTEM_LOAD
PWR_SW
PWRSPLY
R3
120Ω
ESP32
MCU
IO34
IO25
IO26
IO27
IO22
TXD0
RXD0
IO21
IO0
C4
22uF
C5
100nF
R10
10kΩ
C6
100nF
BCM IC
BCM
MCP73871T-2CCI/ML
C1
10uF
C2
4.7uF
C3
4.7uF
F1
BSMD0805L-150
R5
10kΩ
R6
1.5kΩ
R7
10kΩ
Headers/Inputs
UART
FLASH
SENSOR
VOLTAGE DIVIDER/MEASURE (ADC)
R8
100kΩ
R9
100kΩ
TITLE:
HopperHawk
REV: 1.4
Company: Sideline Data, LLC.
Sheet: 1/1
Date: 17 MAR 2024
Drawn By: Joe Pecsi