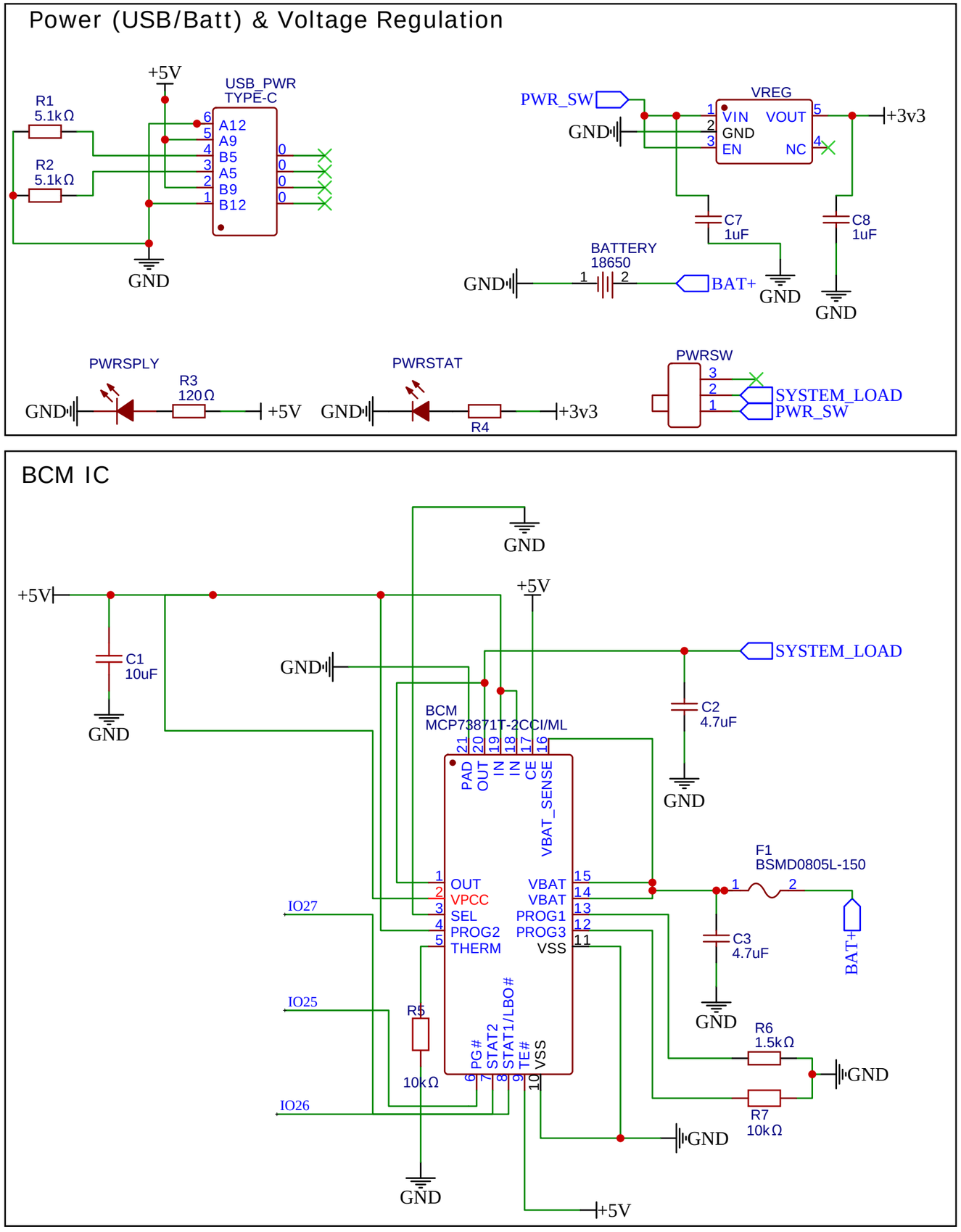

TITLE: HopperHawk	REV: 1.0
Company: Sideline Data, LLC.	Sheet: 1/1
Date: 12 DEC 2024 Drawn By: Joe Pecsi	