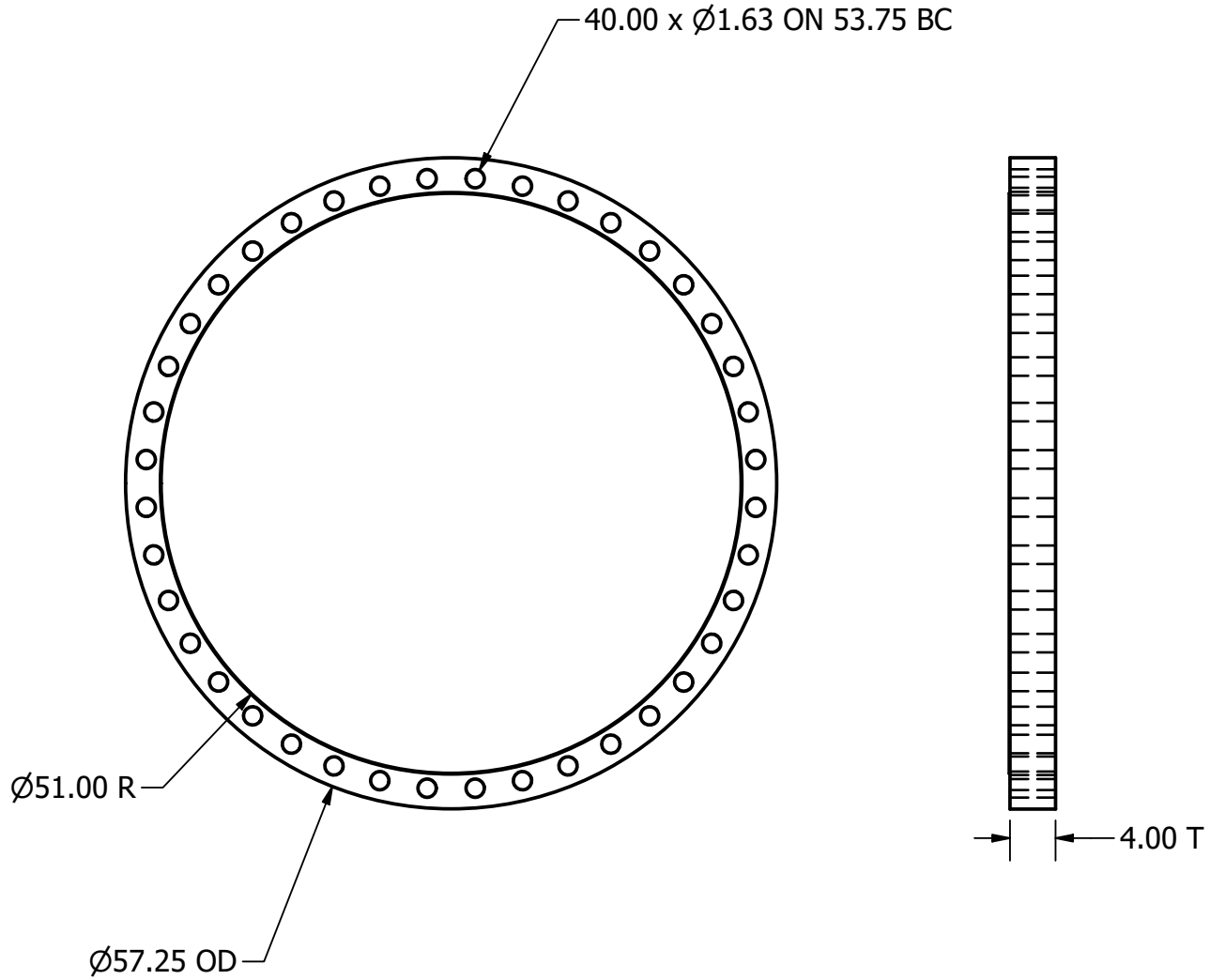

Company	
Part Number ASME-A150-46B	
All dimensions in inches.	SHEET 1 OF 1