HiFi ENGINE®

For more Hi-Fi manuals and set-up information
please visit www.hifiengine.com

SERVICE MANUAL

KENWOOD BASIC M2A

STEREO POWER AMPLIFIER

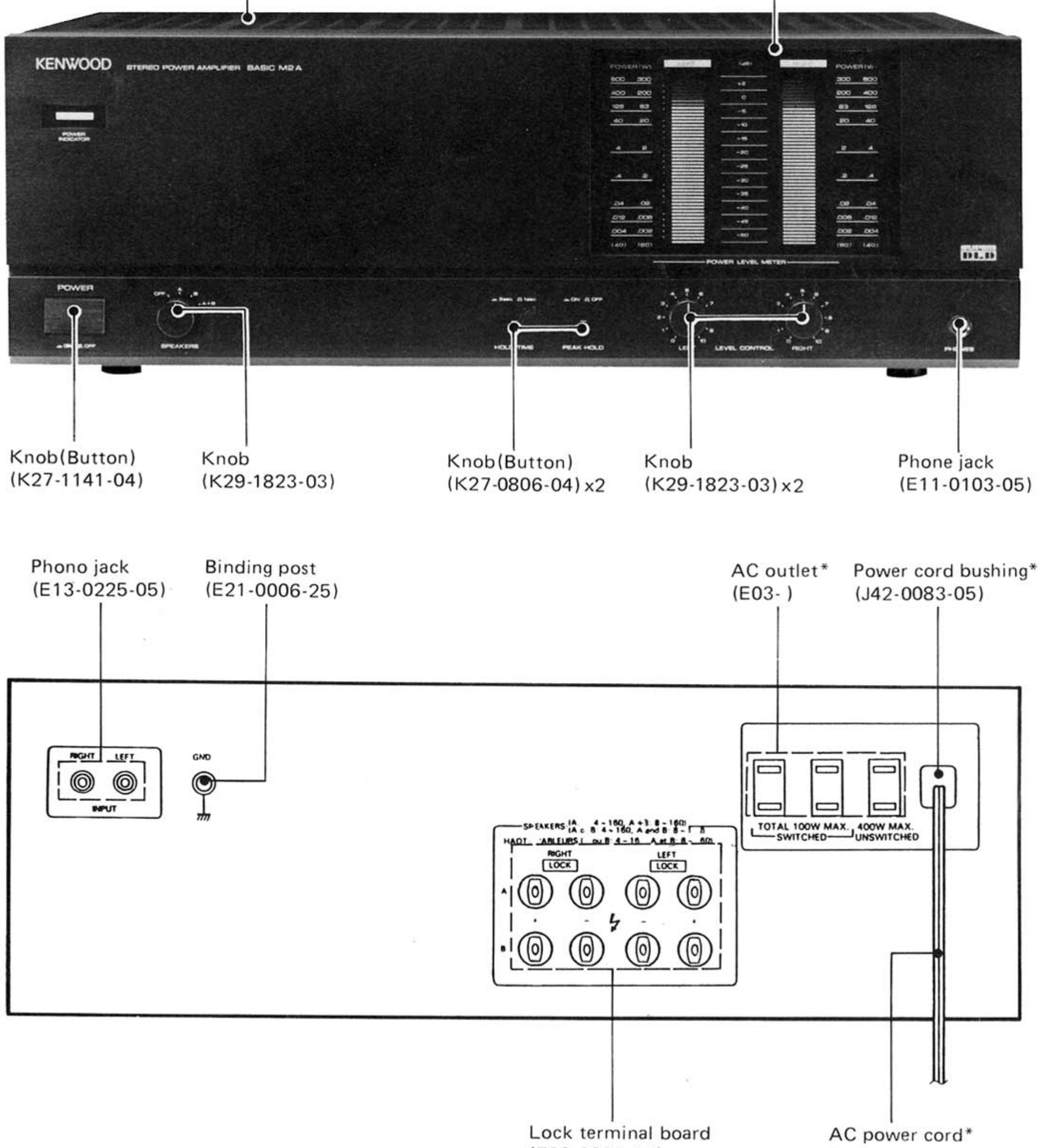

*Refer to parts list on page 10.

BLOCK DIAGRAM

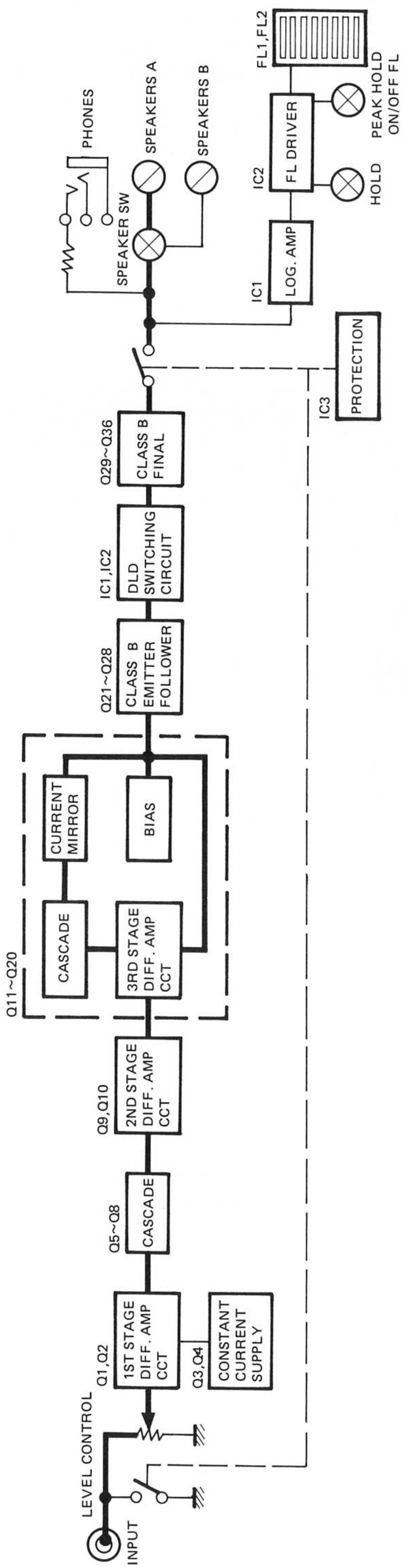

www.hifiengine.com

CIRCUIT DESCRIPTION

Description of Components

POWER SUPPLY (X00-2340-10)

Components	Use and function	Operation, rating and interchangeability
Q1	AVR	2SD313, 2SD330
Q2	AVR	2SB507, 2SB514
D1	RECTIFIER	
D2	RECTIFIER	
D3,D4,D7	RECTIFIER	W06B
D5	AVR	
D6	AVR	
D8,D9	AVR	

POWER AMP (X07-2250-10)

Components	Use and function	Operation, rating and interchangeability
Q1,Q2	1st. stage differential amp	
Q3,Q4	Constant current circuit	
Q5~Q8	Cascade	
Q9,Q10	2nd. stage differential amp	
Q11~Q14	3rd. stage differential amp	Class A amplifier voltage shift
Q15,Q16	Cascade	
Q17,Q18	Current mirror	
Q19,Q20	Class B bias circuit	
Q21~Q28	Class B emitter follower	
Q29~Q32	Class B final	High output final transistor
Q33~Q36	Class B final	Low output final transistor
Q37~Q44	Current limiter circuit	
Q45	Protection driver	Drive transistor for protection IC.
Q46	Constant current circuit	Negative voltage (−B)
Q47	Constant current circuit	Positive voltage (+ B)
IC1,IC2	DLD switching circuit	Switching IC for high and low output signal transitor
IC3	Protection relay driver	Driven by Q45 to drive protection relays RL1 and RL2.

DISPLAY (X25-2470-10)

Components	Use and function	Operation, rating and interchangeability
Q1,Q2	Grid voltage	2SC2320(E,F), 2SC1845
Q10,Q11	Astable multi-vibrator	2SC2320(E,F), 2SC1845
IC1	Peak power meter logic amp	
IC2	Peak hold level meter driver	C MOS LSI for 2ch peak hold level meter with 24 points + 24 points.
D1	Muting	1S2076, 1S1555
D2	Reversal current prevention for B voltage	1S2067A
D3~D5	Winking indicator LED	

www.hifiengine.com

CIRCUIT DESCRIPTION

DESCRIPTION OF SUPER DLD CIRCUIT

With the former DLD amp which has high efficiency, the heatsink can be small, compared with class B amplifier which has the same output power, resulting in high cost performance.

However, the normal listening output power is several mW to several hundred mW and the high voltage circuit seldom operates. For example, with the circuit shown in Fig. 1, the high and low setting is 30W/8Ω to obtain maximum output power of 100W/8Ω. Therefore, at low power of 0~30W, low voltage circuit consisting of Q33, Q35, D2, D9, D11, C70 and C71 functions and high voltage circuit consisting of D1, C72 and C73 operates rarely.

When the high voltage circuit operates, the low voltage circuit does not operate.

With the super DLD circuit, the circuit which is not operated is effectively used to improve performance and tone quality. The operation of the super DLD is described below.

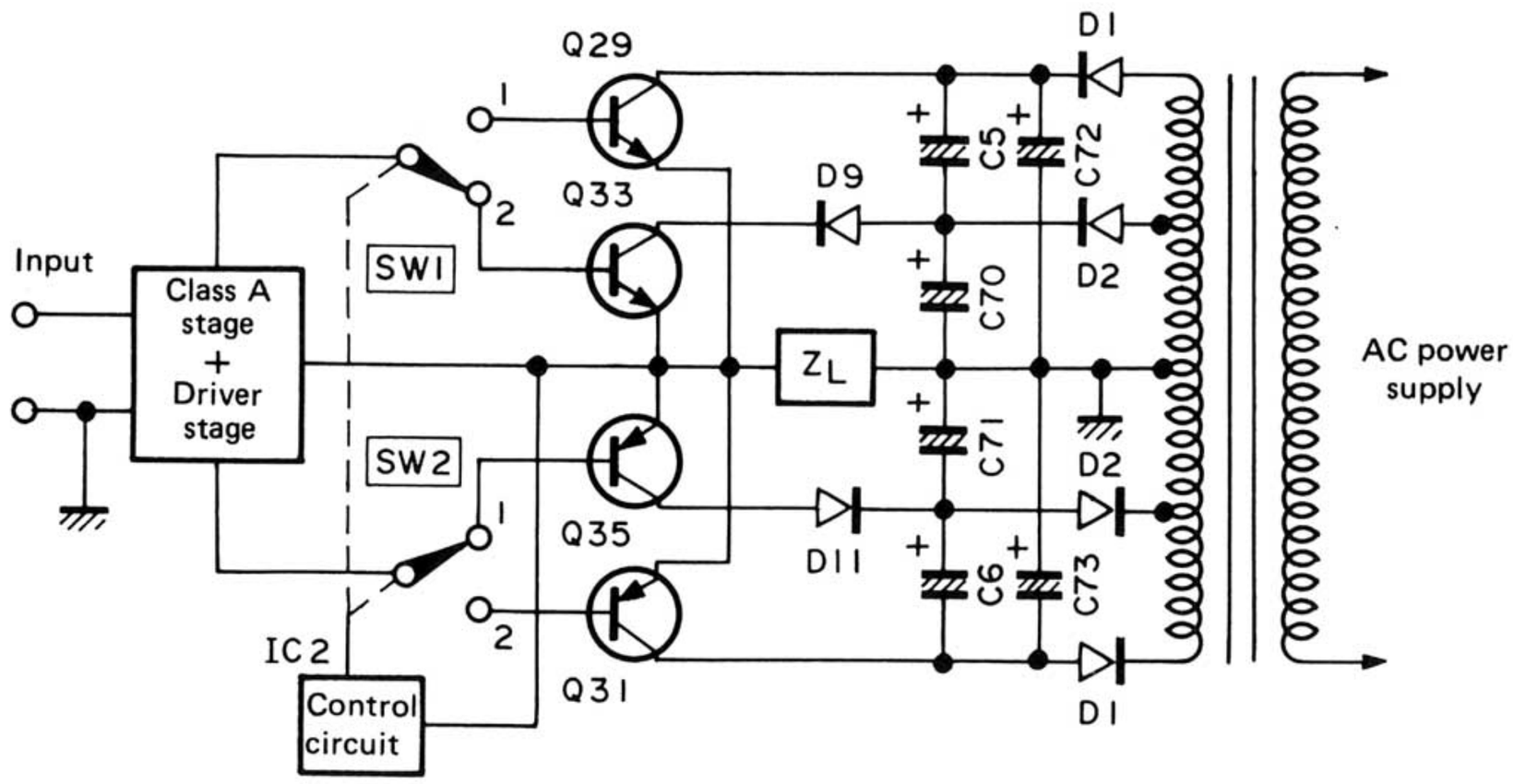

Fig. 1

OPERATIONAL DESCRIPTION

As shown in Fig. 1, C5 and C6 are added to the former DLD circuit to form super DLD circuit. Hereafter, the operation of the amplifier is calss B and the description applies to positive side half cycle.

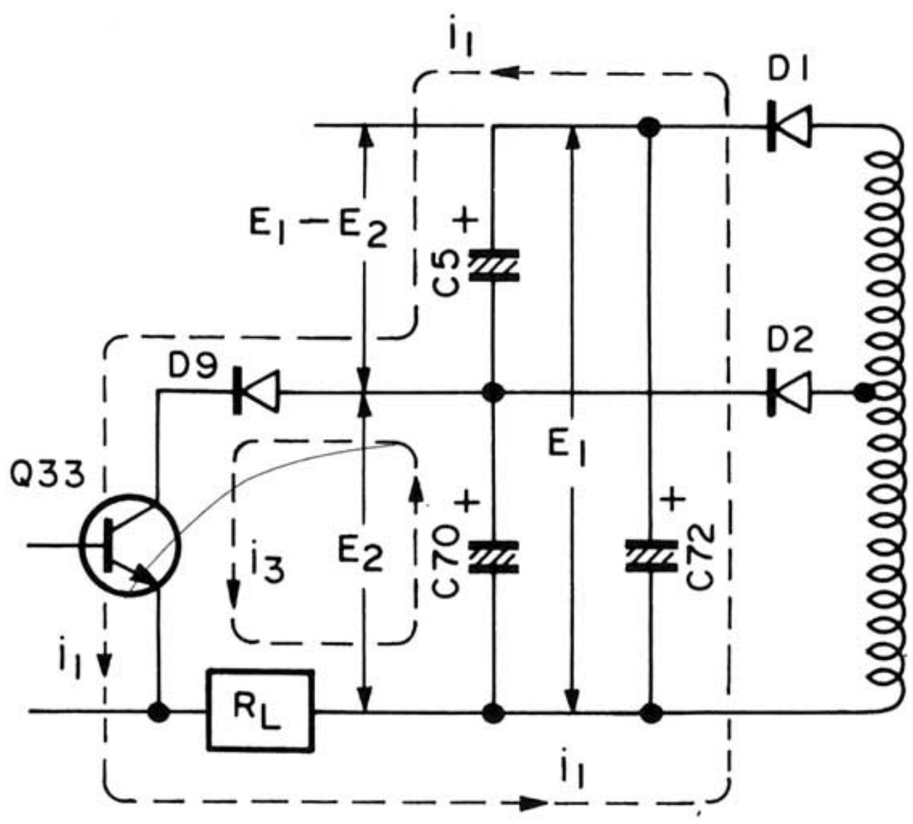

Fig. 2–1

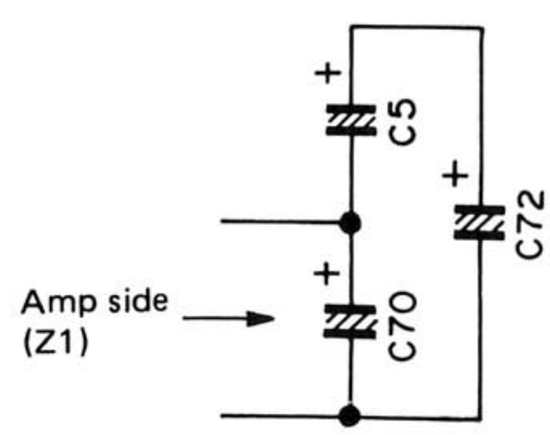

Fig. 2–2

CIRCUIT DESCRIPTION

1. Low power operation

When Q29 opens, the circuit in Fig. 1 can be seen as an equivalent circuit shown in Fig. 2–1.

- At non-signal condition, C5, C70 and C72 are fully charged and voltages E1, E2 and E1–E2 are supplied to C72, C70 and C5 respectively.
- When the signal is applied and Q33 turns on, C70 supplies current i_3 to RL via D9 and Q33 and C72 supplies current i_1 to RL via C5, D9 and C33. Namely, C5 functions as an i_1 bias circuit.
- When this operation is viewed from the amp, the circuit can be described as shown in Fig. 2–2. Namely, the power impedance Z1 viewed from the amp is as follows.

$$Z_1\ (j\omega) = \frac{1}{j\omega} \cdot \frac{C5 + C72}{C5 \cdot C72 + C70\ (C5 + C72)}$$

Assuming that C5 = C70 = C72,

$$Z_1\ (j\omega) = \frac{1}{j\omega} \cdot \frac{1}{\frac{3}{2} C70}$$

Therefore, the curcuit is the same as the former circuit in which C5 and C6 are not employed and C70 is increased by 3/2. The power impedance is decreased by 2/3, to 33%.

Therefore, the AC component at collector voltage of Q33 is decreased, resulting in improved performance and sound quality.

2. High power operation

When Q33 opens, the circuit in Fig. 1 can be seen as an equivalent circuit shown in Fig. 3–1.

- When the signal is supplied and Q29 turns on, the series circuit consisting of C5 and C70 supplies i_3 to RL via Q29 and C72 supplies i_1 to RL via Q29.
- When this operation is viewed from amp, the circuuit can be described as shown in Fig. 3–2. Namely, the power impedance Z2 viewed form the amp is as follows.

$$Z_2\ (j\omega) = \frac{1}{j\omega} \cdot \frac{C5 + C70}{C5 \cdot C70 + C72\ (C5 + C70)}$$

Assuming that C5 = C70 = C72,

$$Z_2\ (j\omega) = \frac{1}{j\omega} \cdot \frac{1}{\frac{3}{2} C72}$$

Therefore, the circuit is the same as the former circuit in which C5 and C6 are not employed and C70 is increased by 3/2. The power impedance is decreased by 2/3, to 33%. Therefore, the AC component at collector voltage of Q29 is decreased, resulting in improved performance and sound quality.

This operation can be applied to the negative side half cycle.

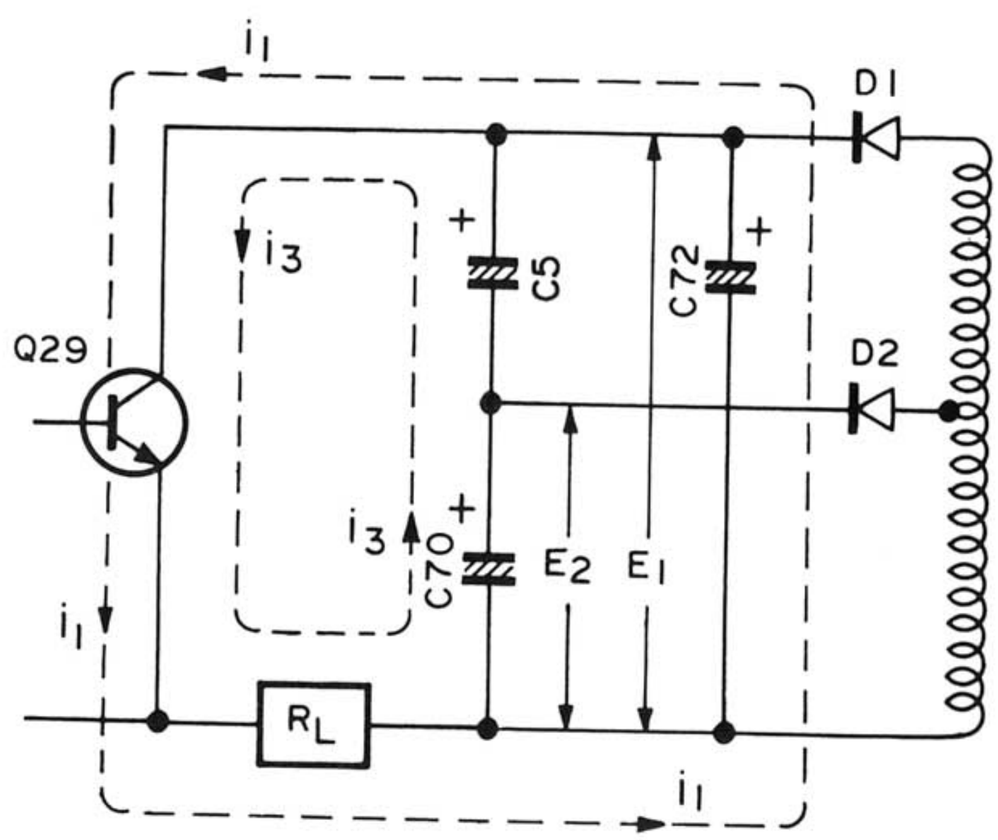

Fig. 3–1

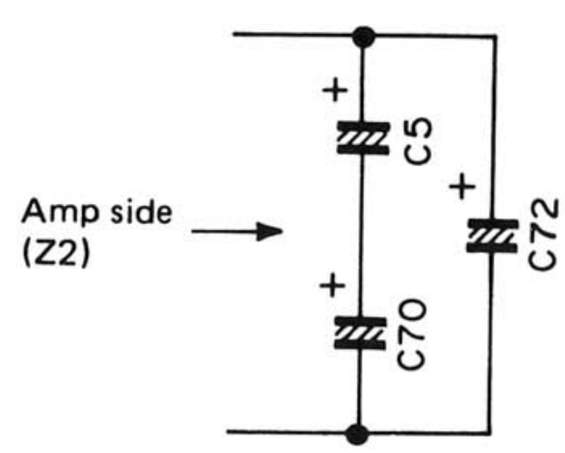

Fig. 3–2

www.hifiengine.com

CIRCUIT DESCRIPTION

CHECKING METHOD OF SUPER DLD CIRCUIT OPERATION

1. Connect an oscilloscope to LOW (+B) and GND.
   Set the oscilloscope input coupling mode to AC.

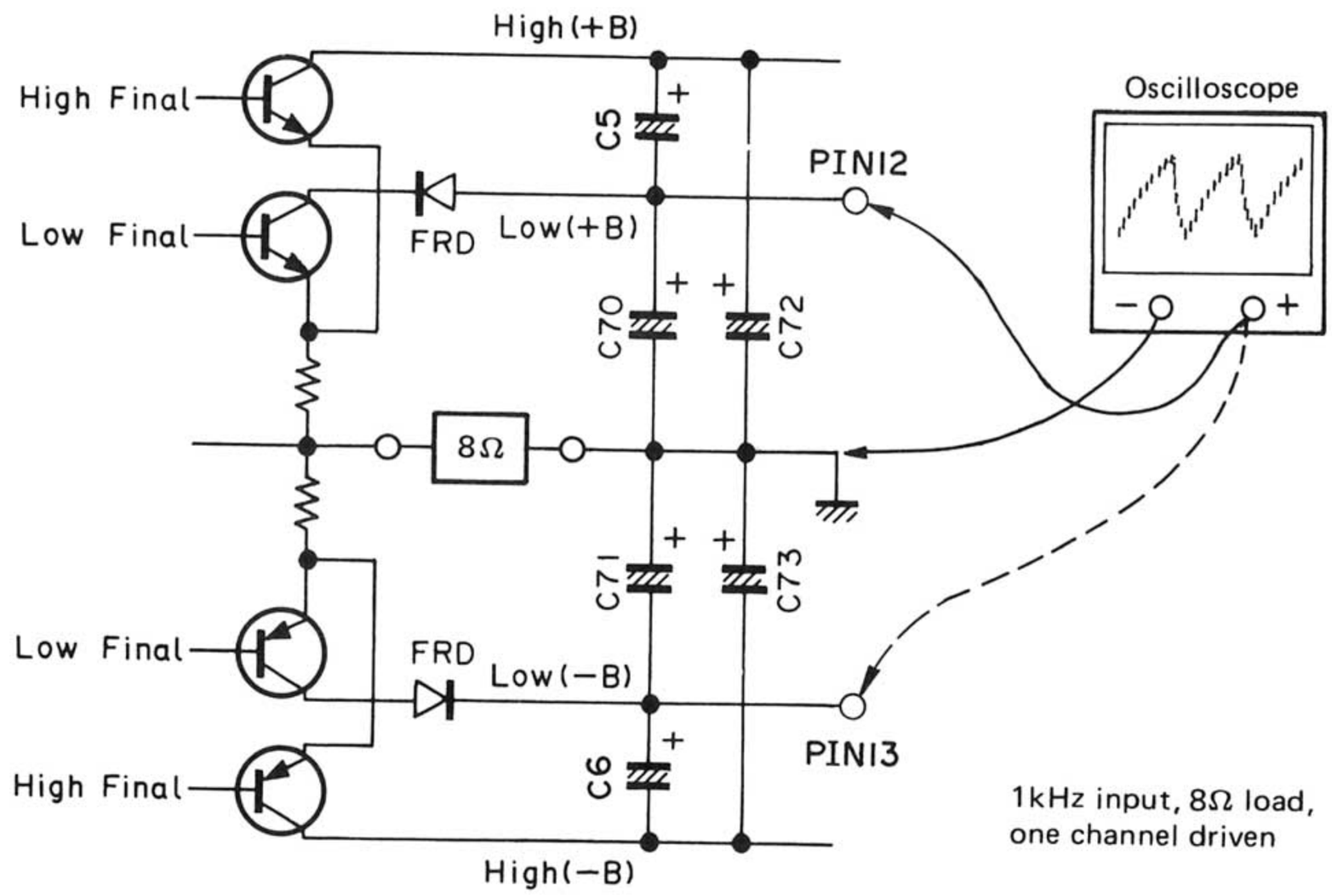

2. Continuously change the output voltage and monitor the ripple waveform at high and low switching.

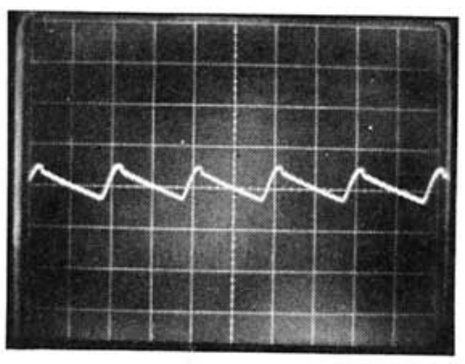

Photo 1
Volume : 0

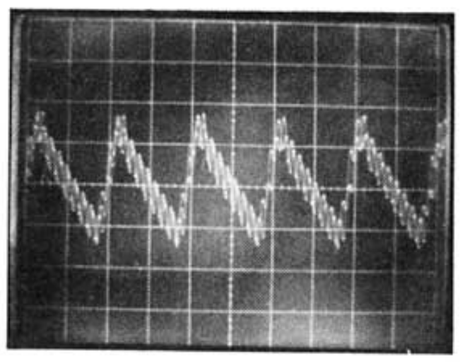

Photo 2
Just before switching

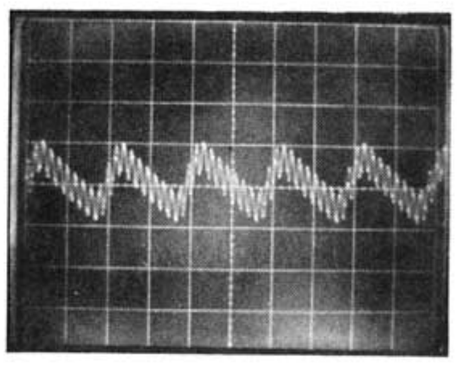

Photo 3
Just after switching

3. Connect the oscilloscope to LOW (−B) and GND.
   Set the oscilloscope input coupling mode to AC.

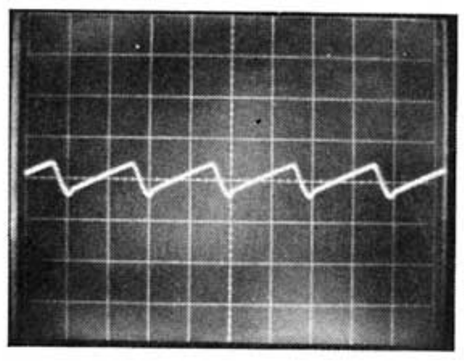

Photo 4
Volume : 0

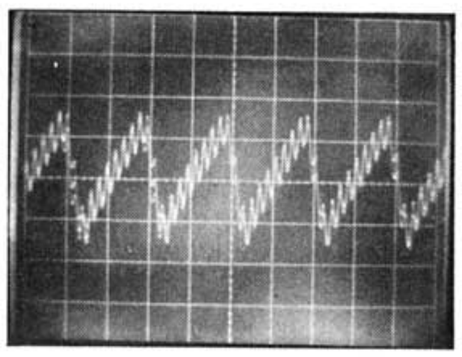

Photo 5
Just before switching

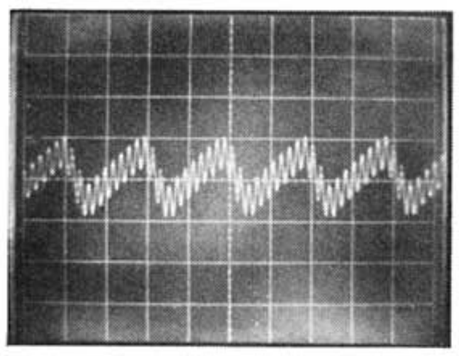

Photo 6
Just after switching

4. Check on the opposite channel's LOW (+ B) and LOW (−B) line in the same way.

www.hifiengine.com

CIRCUIT DESCRIPTION/SYSTEM CONNECTION

Pin connection of LC7550

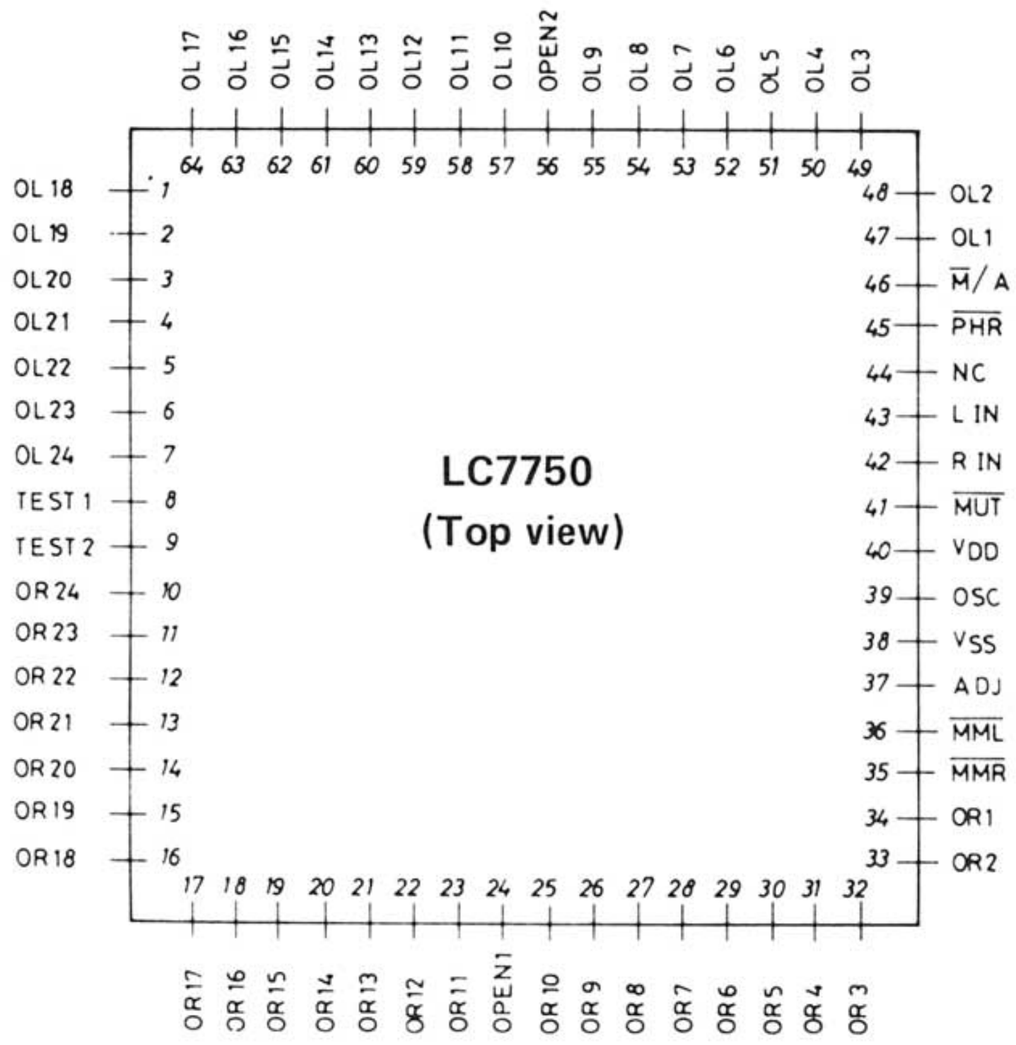

Block diagram of LC7550

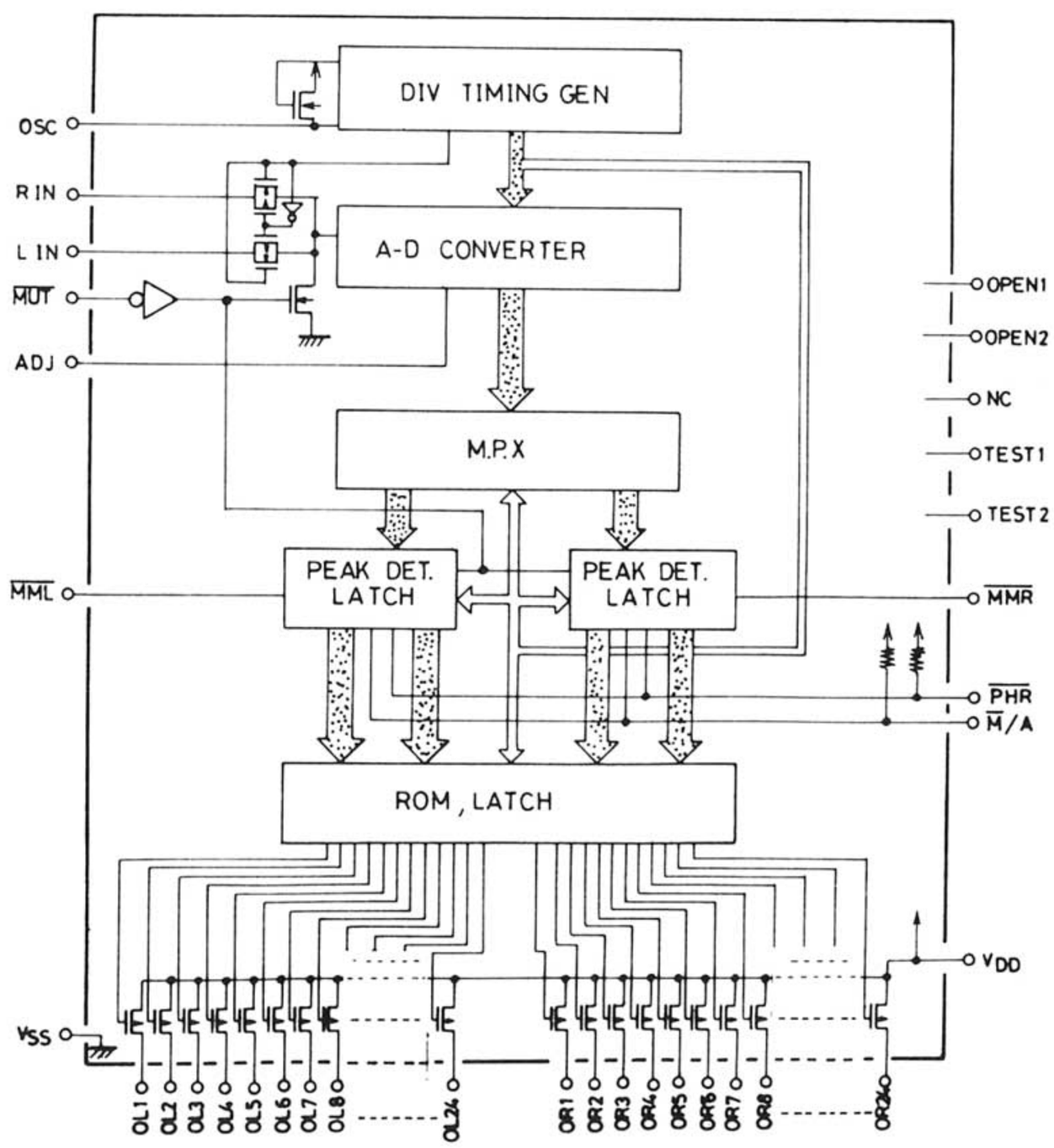

SYSTEM CONNECTION

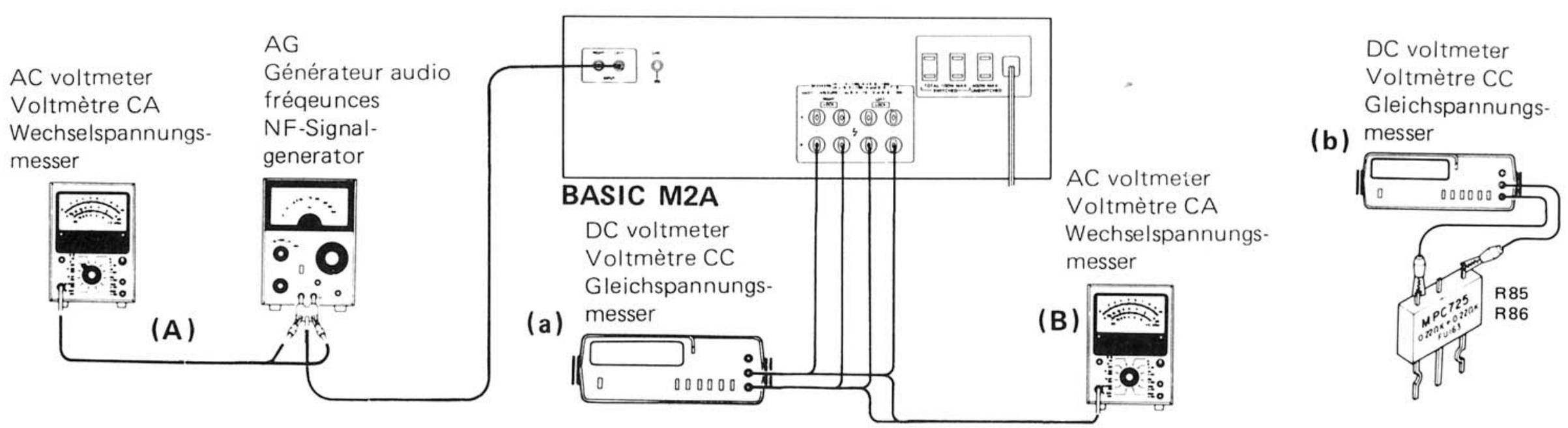

www.hifiengine.com

ADJUSTMENT/REGLAGE/ABGLEICH

ADJUSTMENT

No.	ITEM	INPUT SETTINGS	OUTPUT SETTINGS	AMPLIFIER SETTINGS	ALIGNMENT POINTS	ALIGN FOR	FIG.
Unless otherwise specified, the individual switches should be set as follows: SPEAKER: B							
1	OFFSET	–	Connect a DC voltmeter to SPEAKER B terminal.	LEVEL: 0 SPEAKERS: B	(X07) VR1 (L) VR2 (R)	0V	(a)
2	IDLE CURRENT	–	Connect a DC voltmeter across R85 (L) R86 (R)	LEVEL: 0	(X07) VR3 (L) VR4 (R)	13mV	(b)
3	LEVEL METER (1)	(A) 1kHz, 1V	(B) AC voltmeter (41.95V)	LEVEL: 10	(X25) VR1 (L) VR2 (R)	Adjust the trimming potentiometers so that 220W FL indicators are lit.	
4	LEVEL METER (2)	(A) 1kHz, 1V	(B)	LEVEL: 10	(X25) VR3 (L) VR4 (R)	Same luminescence.	

REGLAGE

N°	ITEM	REGLAGE DE L'ENTREE	REGLAGE DE LA SORTIE	REGLAGE DE L'AMPLIFICATEUR	POINTS DE L'ALIGNMENT	ALIGNER POUR	FIG.
Sauf en cas d'indications spéciales, régler chaque commutateur comme suit: SPEAKER: B							
1	OFFSET	–	Connecter un voltmètre de CC aux bornes de sortie + et – (SPEAKER B)	LEVEL:0 SPEAKERS: B	(X07) VR1 (G) VR2 (D)	0V	(a)
2	COURANT DE POLARISATION	–	Connecter un voltmètre de CC SUR R85 (G) R86 (D)	LEVEL: 0	(X07) VR3 (G) VR4 (D)	13mV	(b)
3	INDICATEUR DE NIVEAU (1)	(A) 1kHz. 1V	(B) AC voltmèter (41,95V)	LEVEL: 10	(X25) VR1 (G) VR1 (D)	Ajuster les rèsistances variables da façon que l'indicateur FL 220W s'llume.	
4	INDICATEUR DE NIVEAU (2)	(A) 1kHz. 1V	(B)	LEVEL: 10	(X25) VR3 (G) VR4 (D)	Le même luminescence.	

ABGLEICH

NR.	GEGENSTAND	EINGANGS-EINSTELLUNG	AUSGANG-EINSTELLUNG	VORSTÄRKER-EINSTELLUNG	ABGLEICHE-PUNKTE	ABGLEICHEEN FÜR	ABB.
Außer wenn anders angegeben, die verschiedenen Schalter wie folgt einstellen: SPEAKER: B							
1	OFFSET	–	Einen Gleichspannungs-messer über SPEAKER B anschließen.	LEVEL: 0 SPEAKERS: B	(X07) VR1 (L) VR2 (R)	0V	(a)
2	LEERLAUF-STROM	–	Einen Gleichspannungs-messer über R85 (L) R86 (R) anschließen.	LEVEL: 0	(X07) VR3 (L) VR4 (R)	13mV	(b)
3	PEGEL MESSER (1)	(A) 1kHz. 1V	(B) Wechselspannungsmesser (41,95V)	LEVEL: 10	(X25) VR1 (L) VR2 (R)	Die Reglwidersande so einstellen deß der FL indikator 220W aufleuchtet wird.	
4	PEGEL MESSER (2)	(A) 1kHz. 1V	(B)	LEVEL: 10	(X25) VR3 (L) VR4 (R)	Gleich Nachleuchten.	

www.hifiengine.com

PC BOARD

Refer to the schematic diagram for the values of resistors and capacitors.

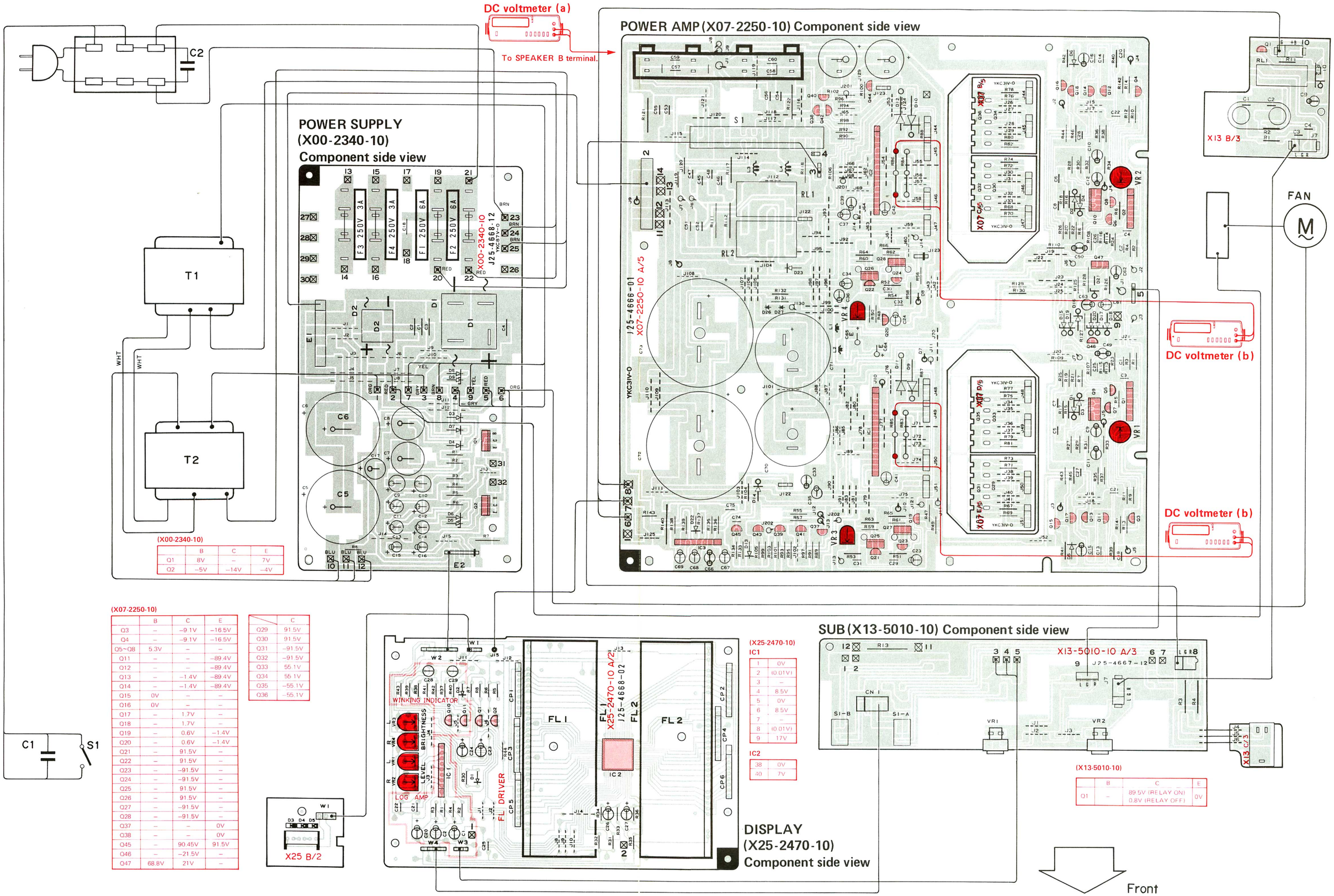

(X00-2340-10)

	B	C	E
Q1	8V	–	7V
Q2	–5V	–14V	–4V

(X07-2250-10)

	B	C	E
Q3	–	–9.1V	–16.5V
Q4	–	–9.1V	–16.5V
Q5~Q8	5.3V	–	–
Q11	–	–	–89.4V
Q12	–	–	–89.4V
Q13	–	–1.4V	–89.4V
Q14	–	–1.4V	–89.4V
Q15	0V	–	–
Q16	0V	–	–
Q17	–	1.7V	–
Q18	–	1.7V	–
Q19	–	0.6V	–1.4V
Q20	–	0.6V	–1.4V
Q21	–	91.5V	–
Q22	–	91.5V	–
Q23	–	–91.5V	–
Q24	–	–91.5V	–
Q25	–	91.5V	–
Q26	–	91.5V	–
Q27	–	–91.5V	–
Q28	–	–91.5V	–
Q37	–	–	0V
Q38	–	–	0V
Q45	–	90.45V	91.5V
Q46	–	–21.5V	–
Q47	68.8V	21V	–

	C
Q29	91.5V
Q30	91.5V
Q31	–91.5V
Q32	–91.5V
Q33	55.1V
Q34	55.1V
Q35	–55.1V
Q36	–55.1V

(X25-2470-10)

IC1

1	0V
2	(0.01V)
3	–
4	8.5V
5	0V
6	8.5V
7	–
8	(0.01V)
9	17V

IC2

38	0V
40	7V

(X13-5010-10)

	B	C	E
Q1	–	89.5V (RELAY ON) 0.8V (RELAY OFF)	0V

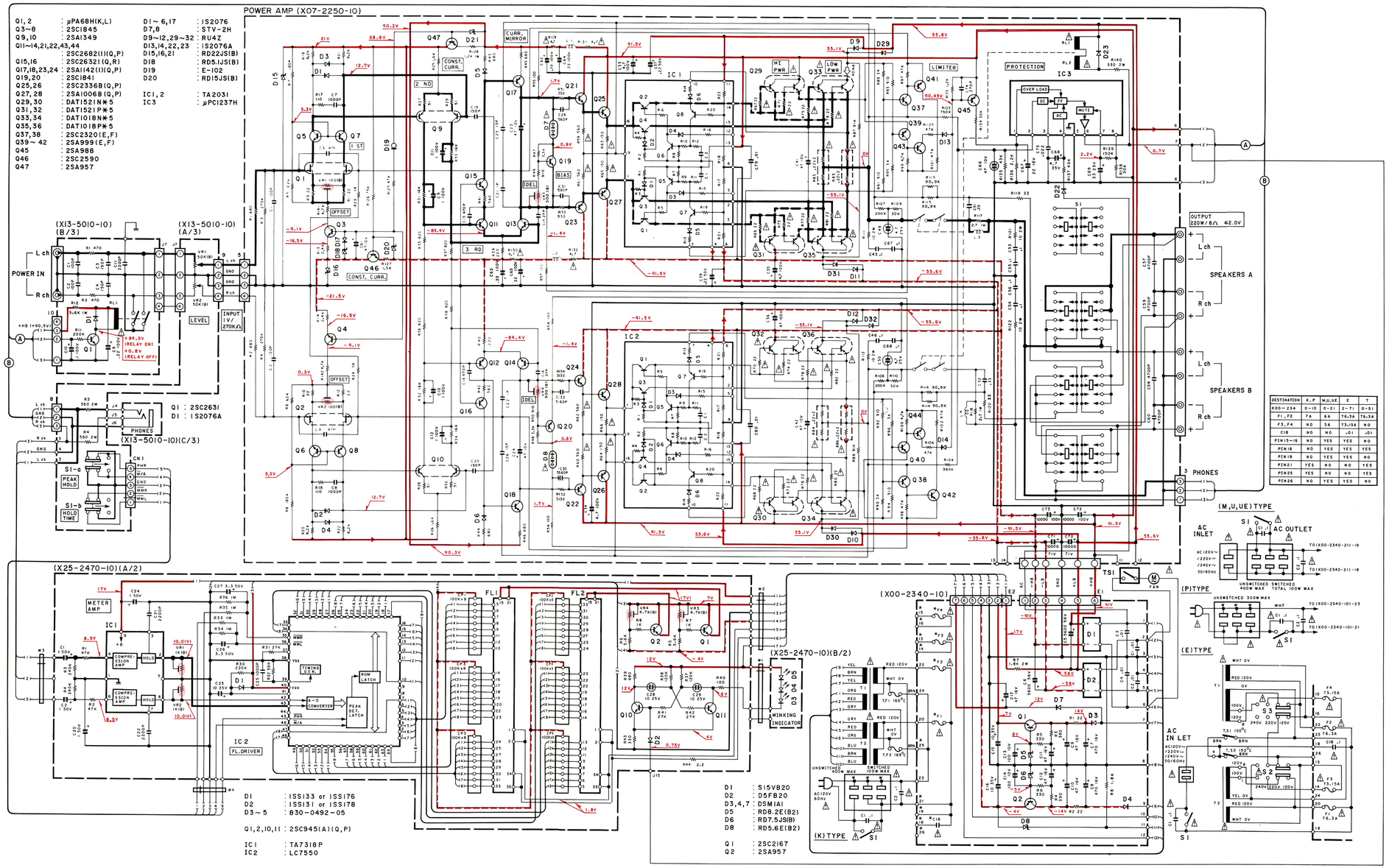

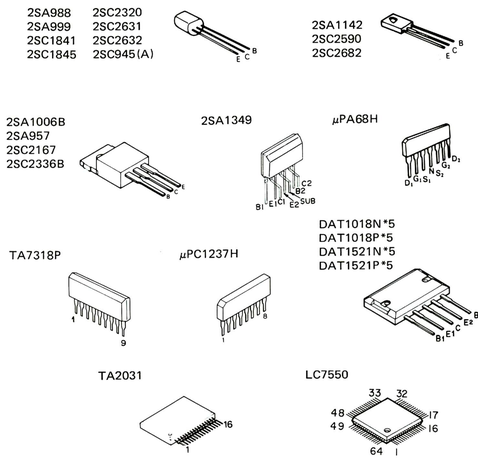

DESTINATION	K,P	M,U,UE	E	T
KOO~234	0~10	0~21	2~71	0~51
F1,F2	7A	6A	T6.3A	T6.3A
F3,F4	NO	3A	T3.15A	NO
C18	NO	NO	·01	·01
PIN13~16	NO	YES	YES	NO
PIN18	NO	YES	YES	YES
PIN19	NO	YES	YES	NO
PIN21	YES	NO	NO	YES
PIN25	YES	NO	NO	YES
PIN26	NO	YES	YES	NO

- DC voltages are as measured with a high impedance voltmeter with no signal input. Values may vary slightly due to variations between individual instruments or/and units.
- Les tensions c.c. doivent être mesurées avec un voltmètre à haute impédance sans signal d'entrée. Les valeurs peuvent différer légèrement du fait des variations inhérentes aux appareils et aux instruments de mesure individuels.
- Die angegebenen Gleichspannungswerte wurden mit einem hochohmigen. Voltmeter ohne Eingangssignal gemessen. Dabei schwanken die Meßwerte aufgrund von Unterschieden zwischen einzelnen Instrumenten oder Geräten u.U. geringfügig.

CAUTION: For continued safety, replace safety critical components only with manufacturer's recommended parts (refer to parts list). ⚠Indicates safety critical components. To reduce the risk of electric shock, leakage-current or resistance measurements shall be carried out (exposed parts are acceptably insulated from the supply circuit) before the appliance is returned to the customer.

BASIC M2A

KENWOOD

PARTS LIST

⁎ New Parts

Parts without **Parts No.** are not supplied.

Les articles non mentionnes dans le **Parts No.** ne sont pas fournis.

Telle ohne **Parts No.** werden nicht geliefert.

	Ref. No. 参照番号	Address 位置	New Parts 新	Parts No. 部品番号	Description 部品名／規格	Destination 仕向	Remarks 備考
	43	1B	*	S90-0087-05	REMOTE SWITCH SHAFT (SPEAKERS)		
⚠	S1	2B	*	S40-1094-05	PUSH SWITCH (POWER ON SW)		
⚠	S2 ,3	1A		S31-2046-05	SLIDE SWITCH (POWER TYPE)	MUUEE	
	POWER SUPPLY (X00-2340-10)						
	C1 -4			CK45FE2H103P	CERAMIC 0.010UF P		
	C5 ,6		*	C90-1327-05	ELECTRO 5200UF 56WV		
	C7 ,8			CE04KW1C471M	ELECTRO 470UF 16WV		
	C9 -12		*	CE04KW1C470M	ELECTRO 47UF 16WV		
	C13 ,14		*	CE04KW1A101M	ELECTRO 100UF 10WV		
	C15 ,16		*	CE04KW1V100M	ELECTRO 10UF 35WV		
	C17		*	CE04KW1C470M	ELECTRO 47UF 16WV		
⚠	C18			C91-0647-05	CERAMIC 0.01UF P	E	
⚠	F1 ,2	1B		F05-6021-05	FUSE (250V 6A)	MUUE	
⚠	F1 ,2	1B		F05-6321-05	FUSE (SEMKO) (250V T6.3A)	E	
⚠	F1 ,2	1B		F05-7026-05	FUSE (UL) (250V 7A)	KP	
⚠	F3 ,4	1B		F05-3022-05	FUSE (250V 3A)	MUUE	
⚠	F3 ,4	1B		F05-3121-05	FUSE (SEMKO) (250V T3.15A)	E	
	54	1B		J13-0041-05	FUSE CLIP	KMUUE	
	54	1B		J13-0041-05	FUSE CLIP	P	
	54	1B		J13-0054-05	FUSE CLIP	E	
	R1 ,2			RD14AB2E220J	FL-PROOF RD 22 J 1/4W		
	R3 ,4			RD14AB2E391J	FL-PROOF RD 390 J 1/4W		
	R5 ,6			RD14AB2E331J	FL-PROOF RD 330 J 1/4W		
	R7			RS14DB3D182J	FL-PROOF RS 1.8K J 2W		
	D1			S15VB20	DIODE		
	D2			D5FB20	DIODE		
	D3 ,4			DSM1A1	DIODE		
	D5			RD8.2E(B2)	ZENER DIODE		
	D6		*	RD7.5JS(B)	ZENER DIODE		
	D7			DSM1A1	DIODE		
	D8			RD5.6E(B2)	ZENER DIODE		
	Q1			2SC2167	TRANSISTOR		
	Q2			2SA957	TRANSISTOR		
	POWER AMPLIFIER (X07-2250-10)						
	C1 ,2			CC45FSL1H101J	CERAMIC 100PF J		
	C3 ,4			CC45FSL1H470J	CERAMIC 47PF J		
	C7 ,8			CK45FB1H102K	CERAMIC 1000PF K		
	C9 -12		*	CE04KW2A010M	ELECTRO 1.0UF 100WV		
	C13 ,14		*	CK45FB2H471K	CERAMIC 470PF K		
	C15 ,16		*	CC45FSL2H270J	CERAMIC 27PF J		
	C19			CC45FSL1H151J	CERAMIC 150PF J		
	C20			CC45FSL1H151J	CERAMIC 150PF J		
	C21 ,22			CC45FSL1H010C	CERAMIC 1.0PF C		
	C23 ,24			CE04KW1A470M	ELECTRO 47UF 10WV		
	C25 ,26		*	CC45FSL2H150J	CERAMIC 15PF J		
	C29 -32			CK45FB1H561K	CERAMIC 560PF K		
	C33 -36		*	CE04KW2A4R7M	ELECTRO 4.7UF 100WV		
	C37		*	CE04KW1HR22M	ELECTRO 0.22UF 50WV		
	C39		*	CE04KW1HR22M	ELECTRO 0.22UF 50WV		
	C41 ,42		*	CE04KW1A470M	ELECTRO 47UF 10WV		
	C45 -48			CF92FV1H104J	MF 0.10UF J		
	C49 ,50			CE04HW1E4R7MEL	NP-ELEC 4.7UF 25WV		
	C51 ,52			CF92FV1H334J	MF 0.33UF J		
	C53 -56			CF92FV1H104J	MF 0.10UF J		

E: Scandinavia & Europe H:Audio Club K: USA P: Canada

S: South Africa T: England U: PX(Far East, Hawaii)

UE : AAFES(Europe) X: Australia M: Other Areas

⚠ indicates safety critical components.

www.hifiengine.com

PARTS LIST

⁎ New Parts
Parts without **Parts No.** are not supplied.
Les articles non mentionnes dans le **Parts No.** ne sont pas fournis.
Telle ohne **Parts No.** werden nicht geliefert.

Ref. No. 参照番号	Address 位置	New Parts 新	Parts No. 部品番号	Description 部品名／規格	Destination 仕向	Remarks 備考
				BASIC M2A		
1	1A		A01-0661-12	METALLIC CABINET		
2	2A	*	A20-4588-03	PANEL ASSY		
6	2A	*	B11-0105-04	COLOR FILTER		
7	2A	*	B20-0600-04	METER SCALE		
-			B46-0092-03	WARRANTY CARD	K	
-			B46-0094-03	WARRANTY CARD	UUE	
-			B46-0095-03	WARRANTY CARD	UUE	
-			B46-0121-03	WARRANTY CARD	P	
-			B46-0122-13	WARRANTY CARD	E	
-		*	B50-5881-00	INSTRUCTION MANUAL(ENGLISH)	KMUUE	
-		*	B50-5881-00	INSTRUCTION MANUAL(ENGLISH)	EP	
-		*	B50-5882-00	INSTRUCTION MANUAL(FRENCH))	MEP	
-		*	B50-5883-00	INSTRUCTION MANUAL(SPANISH)	M	
-		*	B50-5884-00	INSTRUCTION MANUAL(D,I,G)	E	
-			B58-0222-14	CAUTION CARD (PRE-SET 220V)	UE	
-			B58-0223-04	CAUTION CARD (PRE-SET 120V)	U	
-			B58-0245-33	CAUTION CARD (FTZ)	E	
-			B58-0269-04	CAUTION CARD	K	
-			B59-0092-00	SERVICE DIRECTORY	UUE	
⚠ C2			C91-0023-05	CERAMIC 0.01UF AC250V	MUUE	
⚠ C1 ,2			C91-0647-05	CERAMIC 0.01UF P		
11	1A		D32-0082-04	SWITCH STOPPER (S2)	MUUEE	
⚠ 15	1A		E03-0058-05	AC INLET	MUUEE	
⚠ 16	1C		E03-0068-05	AC OUTLET	P	
⚠ 16	1C		E03-0069-05	AC OUTLET	KMUUE	
17	1C		E21-0006-25	BINDING POST (GND TERMINAL)		
⚠ 18	1C		E30-0290-05	AC POWER CORD	K	
⚠ 18	1C		E30-0978-05	AC POWER CORD	P	
⚠ 19	1A		E30-0726-05	AC POWER CORD (INLET)	E	
⚠ 19	1A		E30-0852-05	AC POWER CORD (INLET)	MUUE	
⚠ 24	1C	*	F09-0060-05	FAN ASSY		
-		*	H01-5660-04	ITEM CARTON CASE		
-			H10-1726-12	POLYSTYRENE FOAMED FIXTURE		
-			H25-0204-04	PROTECTION BAG (100X315X0.05)		
-			H25-0225-04	PROTECTION BAG (850X450)		
-			H25-0232-04	PROTECTION BAG (235X350)		
28	2B,2C		J02-0126-05	FOOT		
⚠ 29	1C		J42-0083-05	POWER CORD BUSHING	KP	
-			J61-0307-05	WIRE BAND		
33	2B		K27-0806-04	KNOB (BTN) PEAK HOLD/TIME HOLD		
34	2A		K27-1141-04	KNOB (BTN) POWER		
35	2A		K29-1823-03	KNOB LEVEL CONT,SPEAKERS		
⚠ 39	1B	*	L01-6791-05	POWER TRANSFORMER (T1)	KP	
⚠ 39	1B	*	L01-6796-05	POWER TRANSFORMER (T1)	MUUEE	
⚠ 40	1B	*	L01-6801-05	POWER TRANSFORMER (T2)	KP	
⚠ 40	1B	*	L01-6806-05	POWER TRANSFORMER (T2)	MUUEE	
K	1B		N14-0115-05	FLANGE NUT		
M	1C		N19-0289-04	FLAT WASHER		
Q	1B		N29-0216-05	RIVET		

E: Scandinavia & Europe H:Audio Club K: USA P: Canada
S: South Africa T: England U: PX(Far East, Hawaii)
UE : AAFES(Europe) X: Australia M: Other Areas

⚠ indicates safety critical components.

www.hifiengine.com

EXPLODED VIEW

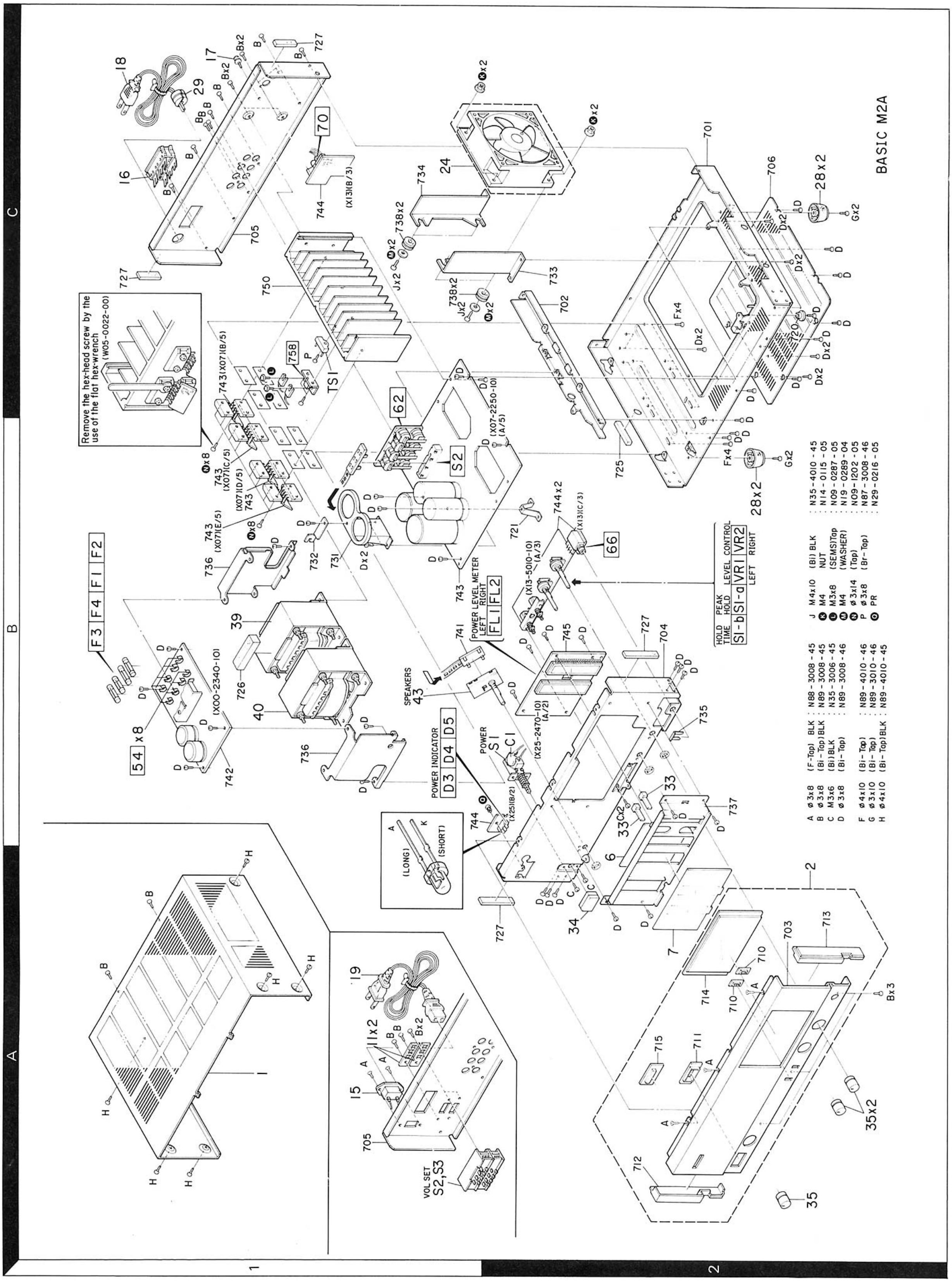

Parts with the exploded numbers larger than 700 are not supplied.

PARTS LIST

* New Parts

Parts without **Parts No.** are not supplied.

Les articles non mentionnes dans le **Parts No.** ne sont pas fournis.

Telle ohne **Parts No.** werden nicht geliefert.

Ref. No. 参照番号	Address 位置	New Parts 新	Parts No. 部品番号	Description 部品名／規格	Destination 仕向	Remarks 備考
C57 -60			CK45FF1H472Z	CERAMIC 4700PF Z		
C61		*	CE04KW1A470M	ELECTRO 47UF 10WV		
C62 ,63		*	CE04KW2AR22M	ELECTRO 0.22UF 100WV		
C64 ,65		*	CE04KW2A220M	ELECTRO 22UF 100WV		
C66			CE04HW1A470MEL	NP-ELEC 47UF 10WV		
C67			CE04KW1C220M	ELECTRO 22UF 16WV		
C68		*	CE04KW1V4R7M	ELECTRO 4.7UF 35WV		
C69		*	CE04GW1E330MEL	LL-ELEC 33UF 25WV		
C70 ,71		*	C90-1326-05	ELECTRO 10000UF 71WV		
C72 ,73			C90-1246-05	ELECTRO 10000UF 100WV		
C74			CC45FSL1H271J	CERAMIC 270PF J		
C75			CF92FV1H223J	MF 0.022UF J		
C79 ,80			CK45FE2H103P	CERAMIC 0.010UF P		
62	1C		E20-0821-05	LOCK TERMINAL BOARD(8P) SPKR		
-			J61-0307-05	WIRE BAND		
L1 ,2			L33-0275-05	CHOKE COIL		
L3 ,4			L39-0081-05	PHASE-COMPENSATION COIL		
N	1B		N09-1202-05	TAPPING SCREW (Ø3X14)		
L	1C		N09-0287-05	SEMS (TAPTITE SCREW)(M3X8)		
R39 ,40			RD14GB2E221JTS	FL-PROOF RD 220 J 1/4W		
R41 ,42			RD14GB2E561JTS	FL-PROOF RD 560 J 1/4W		
R43 ,44			RD14AB2E681JTS	FL-PROOF RD 680 J 1/4W		
R45 ,46			RD14GB2E681JTS	FL-PROOF RD 680 J 1/4W		
R51 -54			RD14GB2E331JTS	FL-PROOF RD 330 J 1/4W		
R55 -58			RD14GB2E101JTS	FL-PROOF RD 100 J 1/4W		
R59 -62			RD14AB2E561JTS	FL-PROOF RD 560 J 1/4W		
⚠ R63 -66			RD14GB2E151JTS	FL-PROOF RD 150 J 1/4W		
⚠ R67 ,68			RD14GB2E220JTS	FL-PROOF RD 22 J 1/4W		
⚠ R69 -72			RD14AB2E220JTS	FL-PROOF RD 22 J 1/4W		
⚠ R73 ,74			RD14GB2E220JTS	FL-PROOF RD 22 J 1/4W		
⚠ R75 ,76			RD14AB2E220JTS	FL-PROOF RD 22 J 1/4W		
⚠ R77 -80			RD14GB2E220JTS	FL-PROOF RD 22 J 1/4W		
⚠ R81 ,82			RD14AB2E220JTS	FL-PROOF RD 22 J 1/4W		
⚠ R83 -86			R90-0187-05	MULTI-COMP 0.22X2 K 5W		
R89 ,90			RD14GB2E302JTS	FL-PROOF RD 3.0K J 1/4W		
R91 -94			RD14GB2E911JTS	FL-PROOF RD 910 J 1/4W		
R95 ,96			RD14GB2E302JTS	FL-PROOF RD 3.0K J 1/4W		
R111,112			RS14GB3D100J	FL-PROOF RS 10 J 2W		
R113-116		*	RN14BK2C9092FTS	RN 90.9K F 1/6W		
R117			RS14KB3A2R7J	FL-PROOF RS 2.7 J 1W		
R118			RS14DB3A2R7J	FL-PROOF RS 2.7 J 1W		
R119			RD14AB2E330JTS	FL-PROOF RD 33 J 1/4W		
R120			RD14GB2E330JTS	FL-PROOF RD 33 J 1/4W		
R121,122			RS14GB3D100J	FL-PROOF RS 10 J 2W		
R127			RD14AB2E152JTS	FL-PROOF RD 1.5K J 1/4W		
R128			RS14DB3A122J	FL-PROOF RS 1.2K J 1W		
⚠ R129			RD14AB2E4R7JTS	FL-PROOF RD 4.7 J 1/4W		
⚠ R130-132			RD14GB2E4R7JTS	FL-PROOF RD 4.7 J 1/4W		
R140			RS14KB3D331J	FL-PROOF RS 330 J 2W		
VR1 ,2			R12-0502-05	TRIMMING POT. (100)OFFSET ADJ		
VR3 ,4			R12-0306-05	TRIMMING POT. (500)IDEL CURRENT		

F: Scandinavia & Europe H:Audio Club K: USA P: Canada

S: South Africa T: England U: PX(Far East, Hawaii)

UE AAFES(Europe) X: Australia M: Other Areas

⚠ indicates safety critical components.

www.hifiengine.com

PARTS LIST

* New Parts
Parts without **Parts No.** are not supplied.
Les articles non mentionnes dans le **Parts No.** ne sont pas fournis.
Telle ohne **Parts No.** werden nicht geliefert.

	Ref. No. 参照番号	Address 位置	New Parts 新	Parts No. 部品番号	Description 部品名／規格	Destination 仕向	Remarks 備考
⚠	RL1 ,2			S51-2045-05	MAGNETIC RELAY		
	S1	1B		S90-0068-05	SLIDE SWITCH (SPEAKERS)		
	TS1	1C		S59-1072-05	THERMAL SWITCH		
	D1 ,2			1S2076	DIODE		
	D3 -6			1S2076	DIODE		
⚠	D7 ,8			STV-2H	VARISTOR		
	D9 -12			RU4Z	DIODE		
	D13 ,14			1S2076A	DIODE		
	D15 ,16		*	RD22E(B)	ZENER DIODE		
	D17			1S2076	DIODE		
	D18			RD5.1JS(B)	ZENER DIODE		
	D19			E-102	CONSTANT CURRENT DIODE		
	D20		*	RD15JS(B)	ZENER DIODE		
	D21		*	RD22E(B)	ZENER DIODE		
	D22 ,23			1S2076A	DIODE		
	D29 -32			RU4Z	DIODE		
	IC1 ,2			TA2031	IC(HI/LOW SWITCHING)		
	IC3			UPC1237H	IC(PROTECTION)		
	Q1 ,2			UPA68H(K,L)	DUAL FET		
	Q3 -8			2SC1845	TRANSISTOR		
	Q9 ,10			2SA1349	DUAL TRANSISTOR		
	Q11 -14		*	2SC2682(1)	TRANSISTOR		
	Q15 ,16			2SC2632(Q,R)	TRANSISTOR		
	Q17 ,18		*	2SA1142(1)	TRANSISTOR		
	Q19 ,20			2SC1841	TRANSISTOR		
	Q21 ,22		*	2SC2682(1)	TRANSISTOR		
	Q23 ,24		*	2SA1142(1)	TRANSISTOR		
	Q25 ,26			2SC2336B(Q,P)	TRANSISTOR		
	Q27 ,28			2SA1006B(Q,P)	TRANSISTOR		
⚠	Q29 ,30		*	DAT1521N*5	TRANSISTOR		
⚠	Q31 ,32		*	DAT1521P*5	TRANSISTOR		
⚠	Q33 ,34		*	DAT1018N*5	TRANSISTOR		
⚠	Q35 ,36		*	DAT1018P*5	TRANSISTOR		
	Q37 ,38			2SC2320(E,F)	TRANSISTOR		
	Q39			2SA999(E,F)	TRANSISTOR		
	Q40 -42			2SA999(E,F)	TRANSISTOR		
	Q43 ,44		*	2SC2682(1)	TRANSISTOR		
	Q45			2SA988	TRANSISTOR		
	Q46			2SC2590	TRANSISTOR		
	Q47			2SA957	TRANSISTOR		
	SUB-CIRCUIT (X13-5010-10)						
	C1 ,2			CC45FSL1H101J	CERAMIC 100PF J		
	C3 ,4			CC45FSL1H151J	CERAMIC 150PF J		
	C9			CE04FW2AR22M	ELECTRO 0.22UF 100WV		
	C10			CE04FW2A0R1M	ELECTRO 0.1UF 100WV		
	66	2B		E11-0103-05	PHONE JACK (3P) PHONES		
	70	1C		E13-0225-05	PHONO JACK (2P) POWER IN		
	R3 ,4			RS14GB3D561JMA	FL-PROOF RS 560 J 2W		
	R12			RS14GB3A562JMA	FL-PROOF RS 5.6K J 1W		
	VR1 ,2			R05-4002-05	POTENTIOMETER(50K) LEVEL CONT		
⚠	RL1			S51-2061-05	REED RELAY		
	S1	2B		S42-2102-05	MULT PUSH SW(PEAK HOLD, ETC)		

E: Scandinavia & Europe H:Audio Club K: USA P: Canada
S: South Africa T: England U: PX(Far East, Hawaii)
UE AAFES(Europe) X: Australia M: Other Areas

⚠ indicates safety critical components.

www.hifiengine.com

PARTS LIST

⁎ New Parts
Parts without **Parts No.** are not supplied.
Les articles non mentionnes dans le **Parts No.** ne sont pas fournis.
Telle ohne **Parts No.** werden nicht geliefert.

Ref. No. 参照番号	Address 位置	New Parts 新	Parts No. 部品番号	Description 部品名／規格	Destination 仕向	Remarks 備考
D1			1S2076A	DIODE		
Q1			2SC2631	TRANSISTOR		
DISPLAY (X25-2470-10)						
D3 -5			B30-0492-05	LED(SLP-981E-50)		
C1 ,2			CE04KW1H010M	ELECTRO 1.0UF 50WV		
C20			CE04KW1H010M	ELECTRO 1.0UF 50WV		
C21 ,22			CF92FV1H222J	MF 2200PF J		
C23			CE04KW1V100M	ELECTRO 10UF 35WV		
C24			CE04KW1H010M	ELECTRO 1.0UF 50WV		
C25			CQ09FS1H102J	POLYSTY 1000PF J		
C26 ,27		*	CE04KW1H3R3M	ELECTRO 3.3UF 50WV		
C28 ,29			CE04HW1E100M	NP-ELEC 10UF 25WV		
CP1 -6			R90-0294-05	MULTI-COMP 100KX8 J 1/6W		
VR1 ,2			R12-1066-05	TRIMMING POT.(1K) LEVEL METER		
VR3 ,4			R12-1069-05	TRIMMING POT.(4.7K)LEVEL METER		
D1			1SS133	DIODE		
D1			1SS176	DIODE		
D2			1SS131	DIODE		
D2			1SS178	DIODE		
FL1 ,2		*	FIP48AW14YS	FLUORESCENT INDICATOR TUBE		
IC1			TA7318P	IC(PEAK POWER METER DRIVER)		
IC2		*	LC7550	IC(24PT FL PEAK LEVEL METER DR		
Q1 ,2			2SC945(A)(Q,P)	TRANSISTOR		
Q10 ,11			2SC945(A)(Q,P)	TRANSISTOR		

E: Scandinavia & Europe H:Audio Club K: USA P: Canada
S: South Africa T: England U: PX(Far East, Hawaii)
UE . AAFES(Europe) X: Australia M: Other Areas

⚠ indicates safety critical components.

www.hifiengine.com

SPECIFICATIONS

Rated Power Output

220 watts* per channel minimum RMS, both channels driven, at 8 ohms from 20 Hz to 20,000 Hz with no more than 0.004% total harmonic distortion.

Clipping Headroom
at 8 ohms .....0.5 dB
Dynamic Headroom
at 8 ohms .....2.0 dB
Total Harmonic Distortion
MAIN IN
(20 Hz to 20,000 Hz) .....0.004% at rated power into 8 ohms
(1 kHz).....0.001% at rated power into 8 ohms
Intermodulation Distortion.....0.004% at rated power into 8 ohms
(60 Hz:7 kHz = 4:1)
Damping Factor .....1,000 at 50 Hz, 8 ohms
Transient Response
Rise Time.....1.6μs
Frequency Response .....DC to 300 kHz, +0, −3 dB
Signal-to-Noise Ratio.....120 dB
Input Sensitivity/Impedance
INPUT .....1 V/47 kohms

General

Power Consumption .....6.9 A (USA)
7.9 A (Canada)
500 W (Others)
A.C. Outlets.....Switched 2, Unswitched 1
Dimensions .....W 440 mm (17-5/16″)
H 158 mm (6-7/32″)
D 373 mm (14-11/16″)
Weight.....15.5 kg (34.1 lb)

* Measured pursuant to Federal Trade Commission's Trade Regulation rule on Power Output Claims for Amplifier in U.S.A.

Note:
We follow a policy of continuous advancements in developments. For this reason specifications may be changed without notice.

Note :

Component and circuitry are subject to modification to insure best operation under differing local conditions. This manual is based on, the U.S.A. (K) standard, and provides information on regional circuit modification through use of alternate schematic diagrams, and information on regional component variations through use of parts list.

TRIO-KENWOOD CORPORATION
Shionogi Shibuya Building, 17-5, 2-chome Shibuya, Shibuya-ku, Tokyo 150, Japan
KENWOOD ELECTRONICS
DIVISION OF KENWOOD U.S.A. CORPORATION
1315 E. Watsoncenter Rd., Carson, California 90745, U.S.A.
75 Seaview Drive, Secaucus, New Jersey 07094, U.S.A.
TRIO-KENWOOD CANADA INC.,
1070 Jayson Court, Mississauga, Ontario, Canada L4W 2V5
TRIO-KENWOOD ELECTRONICS, N.V.
Leuvensesteenweg 504 B-1930 Zaventem, Belgium
TRIO-KENWOOD ELECTRONICS GmbH
Rembrücker Str. 15, 6056 Heusenstamm, West Germany
TRIO-KENWOOD FRANCE S.A.
5, Boulevard Ney, 75018 Paris, France
TRIO-KENWOOD (AUSTRALIA) PTY. LTD. (INCORPORATED IN N.S.W.)
4E Woodcock Place, Lane Cove, N.S.W. 2066, Australia
KENWOOD & LEE ELECTRONICS, LTD.
Wang Kee Building, 5th Floor, 34-37, Connaught Road, Central, Hong Kong

1985-6 PRINTED IN JAPAN B51-1786-00 (O) 2701

www.hifiengine.com