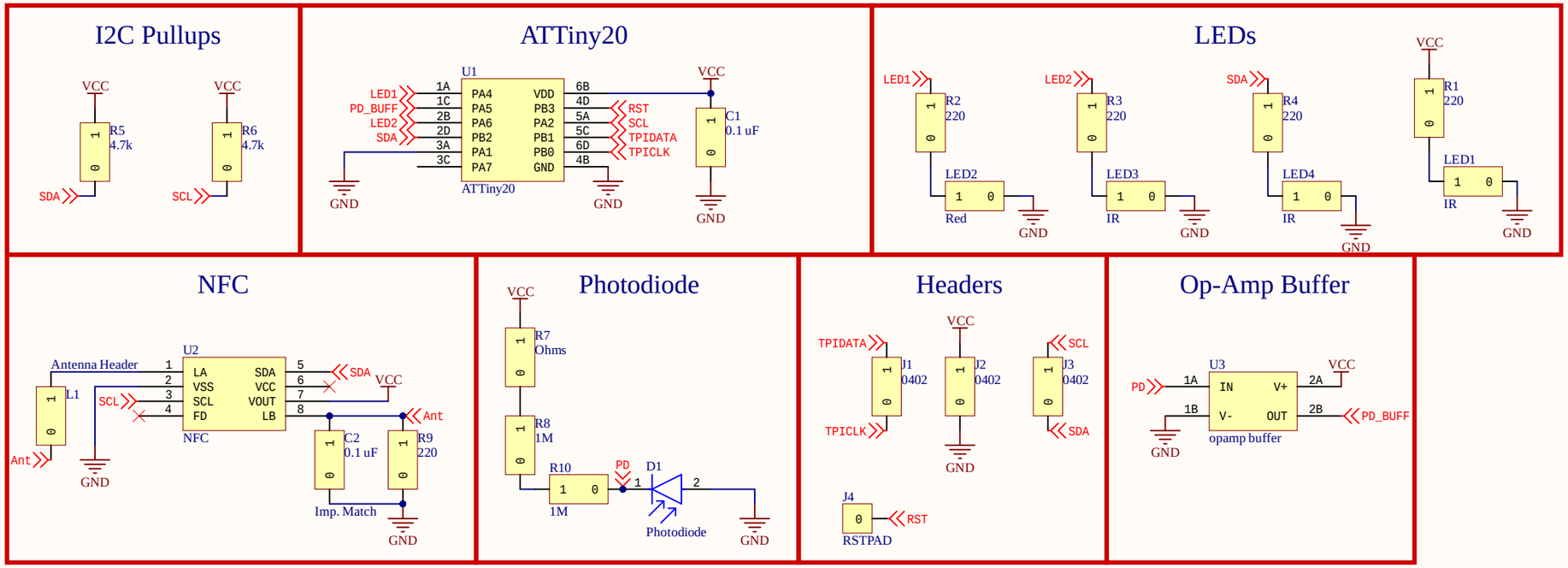

Project	ENTER PROJECT NAME		
Title	ENTER SHEET TITLE		CUAir ENTER ENGINEER NAME 2019
Size: B	Number: ENTER CPN	Revision: ENTER REVISION NUMBER	
Date: 8/4/2021		1 1	
File: C:\Users\Jade\AppData\Local\TempReleases\Snapshot\1\sch.SchDoc			