A Statistical Method for the Detection of Sensor Abrupt Faults in Aircraft Control Systems

Paraskevi A. Samara, George N. Fouskitakis, John S. Sakellariou, and Spilios D. Fassois

***Abstract*—Aircraft sensors are important for proper operation and safety, and their condition is conventionally monitored based upon the hardware redundancy principle. In this work a statistical method capable of independently monitoring a single sensor, and thus enhancing reliability and overall system safety, is introduced. The method's main advantages are simplicity, applicability to a wide variety of aircraft operating conditions, the handling of uncertainties, no need for additionally monitored signals, and no need for physics based aircraft dynamics models. The method is based on a statistical time series framework accounting for random effects and uncertainties, and exploits the fact that abrupt faults are characterized by time constants smaller than those of the aircraft. It employs monitored signal nonstationarity removal, signal whitening via novel pooled autoregressive modeling, statistical decision making, as well as electronic spike/glitch removal logic. The method effectiveness is demonstrated within the simulation environment of a small commercial aircraft via test cases and Monte Carlo experiments with abrupt faults occurring in an angle-of-attack sensor.**

***Index Terms*—Aircraft control systems, angle-of-attack sensor, fault diagnosis, sensor abrupt faults, statistical methods.**

I. Introduction

SENSORS are important aircraft instruments, as proper operation and overall system safety require their good and reliable performance. In modern aircraft, reliability and safety are conventionally enhanced based upon the hardware redundancy principle. Yet, the stringent safety requirements imposed, and also the longer term objective of minimizing hardware replication on board, make the additional use of software-based sensor monitoring and fault detection methods highly desirable.

As a consequence, a number of aircraft sensor and actuator fault detection and isolation (FDI) methods have been developed in recent years. Several of them are based upon linear or linearized models and Kalman filtering (KF)-type techniques. Hajiyev and Caliskan [1], [2] utilize analysis of KF-based innovations within a statistical framework. Multiple model adaptive estimation (MMAE) and interacting multiple model (IMM) estimation methods are postulated by Menke and Maybeck [3] and Zhang and Li [4], respectively. In these methods several parallel extended KFs are designed, each one corresponding to a possible sensor or actuator fault. Zolghadri [5] utilizes a similar bank of extended KFs and decision making based upon the parameter vectors or the innovations sequences for the detection of sensor faults.

An alternative family of methods is based upon the concept of a bank of isolation estimators [6], [7], each one covering an area of the aircraft dynamics under specific failure scenarios. These methods are more involved and their design requires the analysis of the stability and learning properties of the fault isolation estimators approximating an unknown sensor fault, determination of the adaptive decision thresholds for each estimator, and, determination of the fault isolability conditions. Within this framework, issues such as the use of nonlinear aircraft models and the effective treatment of uncertainties are under investigation [6].

A third family of methods utilizes $\mathcal{H}_\infty$ type observers for sensor fault detection and isolation [8]–[10]. The $\mathcal{H}_\infty$ approach minimizes the influence of noise, disturbances, uncertainties, and commands on the residuals used for fault detection and isolation, and maximizes the effects of faults. Nevertheless, it relies on knowledge of a reliable model of the physical system and the computational burden may grow rapidly as the number of faulty sensors increases. Observer stability and robustness are theoretically guaranteed only in the neighborhood of the design points, although this can be mitigated using a multi-model approach.

Neural network-based methods are also postulated in a number of studies [11]–[14]. They utilize identified neural network-type models for the estimation ("reconstruction") of the signal of interest using other available measurements (the virtual sensor concept), while the detection of a failed physical sensor is based upon monitoring of the error between the signal obtained via the physical sensor and its estimated counterpart. The advantage of the neural network-based approach basically lies with the model's capability to capture the nonlinear dynamics of the aircraft (in contrast to KF-type methods that are based upon linearized models). Yet, a higher level of complexity is introduced, and training may be time consuming. A study comparing KF and neural network-based schemes for sensor fault detection in flight control systems is presented in Napolitano *et al.* [15].

A weak-model-based method, in the sense that only limited knowledge on the characteristics of the signals and the underlying dynamics is required, for the detection of faults in aircraft sensors is presented in Golan *et al.* [16]. The faults are detected through nonlinear analysis using the wavelet transform and neural network-based classification. An alternative approach, which employs a virtual sensor in the form of a fuzzy model of

Manuscript received November 16, 2005; revised September 12, 2006. Manuscript received in final form December 17, 2006. Recommended by Associate Editor S. Kim. This work was supported by the European Commission via the Growth Project GRD1-2000-25261 (Affordable Digital Fly-by-Wire Flight Control Systems for Small Commercial Aircraft, Phase II—ADFCSII).

P. A. Samara was with the Department of Mechanical and Aeronautical Engineering, University of Patras, GR 265 00 Patras, Greece. She is now with the Department of Product Development, Frigoglass S.A.I.C., GR 252 00 Kato Achaia, Greece (e-mail: psamara@frigoglass.com).

G. N. Fouskitakis was with the Department of Mechanical and Aeronautical Engineering, University of Patras, GR 265 00 Patras, Greece. He is now with the Department of Electronics, Technological Educational Institute of Crete, Crete GR 73133, Greece (e-mail: fouskit@chania.teicrete.gr).

J. S. Sakellariou and S. D. Fassois are with the Department of Mechanical and Aeronautical Engineering, University of Patras, GR 265 00 Patras, Greece (e-mail: sakj@mech.upatras.gr; fassois@mech.upatras.gr).

Digital Object Identifier 10.1109/TCST.2007.903109

1063-6536/$25.00 © 2008 IEEE
Authorized licensed use limited to: The University of Toronto. Downloaded on March 11,2026 at 22:04:16 UTC from IEEE Xplore. Restrictions apply.

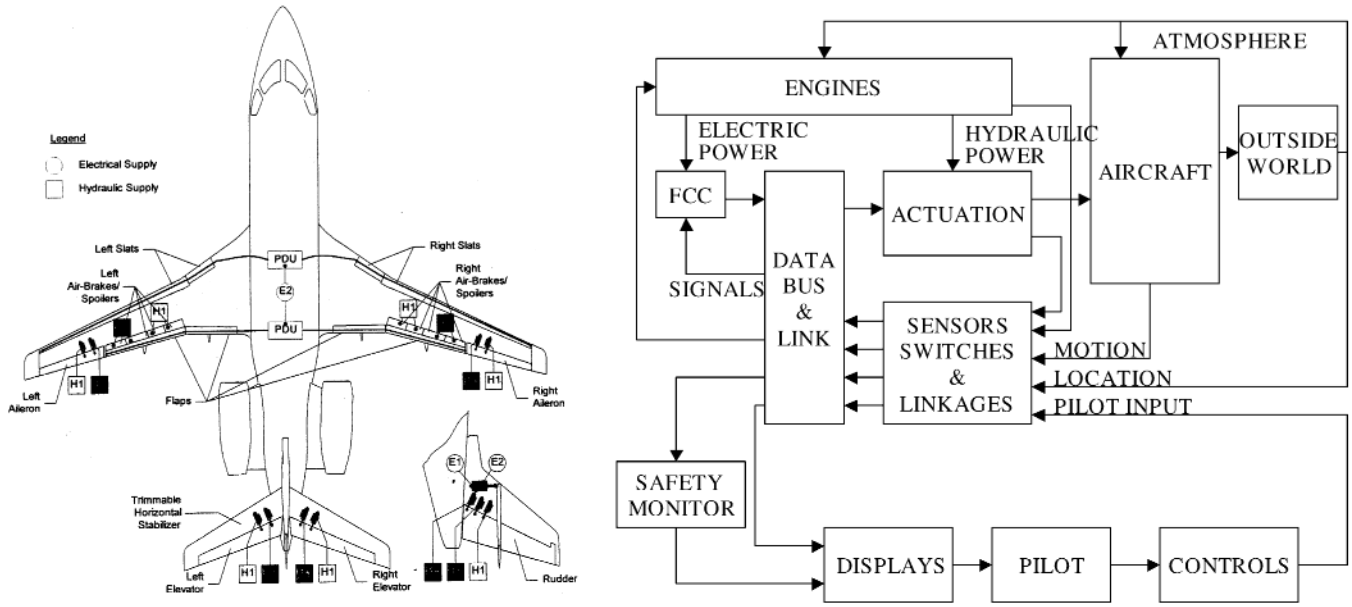

Fig. 1. Aircraft schematic and functional diagram of the aircraft model [22], [23].

the Takagi–Sugeno type for the identification of failed physical sensors, is presented in Oosterom and Babuska [17].

The *aim* of the present study is the development and assessment of a statistical method capable of independently monitoring a single sensor, and thus enhancing reliability and overall aircraft safety. The method's main features and distinct advantages over current approaches are: 1) simplicity; 2) applicability to various aircraft operating conditions; 3) effective handling of uncertainties; 4) no need for additionally monitored signals; and 5) no need for physics-based aircraft dynamics models.

The method is based on a *statistical time series framework* accounting for random effects and uncertainties, and exploits the fact that *abrupt* faults (such as the sudden introduction of a sensor bias, sudden increase of sensor noise, and failure to zero—the last also referred to as "sensor disconnection") are characterized by time constants smaller than those of the aircraft. The method is built on four consecutive stages or operating units: 1) signal non-stationarity removal; 2) signal whitening via novel pooled autoregressive (PAR) modeling; 3) statistical decision making; and 4) electronic spike/glitch removal logic.

In addition to the overall statistical time series framework, each one of the four units of the method plays an important role in achieving high performance. Signal nonstationarity, that is time-dependency of its characteristics, is inherent in aircraft systems (see further comments in Subsection III-B), and its removal is essential for effective decision making and fault detection. Signal whitening, that is dynamics (serial dependency) removal, is also necessary and greatly facilitates the use of statistical detection schemes which require white (uncorrelated) signal samples on which to operate [18]. This task is tricky for an aircraft flying under various operating and environmental conditions. Indeed, while a conventional signal model could be adequate for a particular flight or set of conditions, it turns out that it *cannot* represent the signal characteristics for different flights or under various conditions. In this work this difficulty is effectively circumvented via the use of novel PAR models and respective estimation techniques. PAR models have been recently introduced by the authors and coworkers [19]–[21], and allow for the effective identification of a system (such as aircraft) under various operating conditions. It is precisely PAR signal modeling, which, combined with the other three units, ensures the method's effectiveness. Statistical decision making is necessary for effectively accounting for uncertainties at a user selected risk level, and is based upon proper hypothesis testing procedures applied on the whitened signal. The spike/glitch removal logic is finally necessary in order to enable the distinction of electronic spikes and glitches from actual faults.

The fault detection method is implemented within the synthetic (simulation) environment of a small commercial aircraft developed within the European Research Project "Affordable Digital Fly-by-Wire Flight Control Systems for Small Commercial Aircraft (ADFCS)—Phases I and II" [22], [23], and is assessed via test cases and Monte Carlo experiments with abrupt faults occurring in an angle-of-attack (AoA) sensor.

The rest of this brief is organized as follows. A brief description of the small commercial aircraft synthetic (simulation) environment is presented in Section II. The faults considered and the fault detection method are presented in Section III, and its application to angle-of-attack sensor fault detection is demonstrated in Section IV. The conclusions of the study are summarized in Section V.

II. Overview of the Aircraft Simulation Model

The study is based upon a detailed simulation model of a small commercial aircraft implemented within the MATLAB/Simulink environment. An aircraft schematic, along with a functional diagram of the model, are shown in Fig. 1. A brief description of the small commercial aircraft synthetic environment is presented in the sequel (details in [22] and [23]).

The aircraft block represents the aircraft's nonlinear dynamics using a six degree-of-freedom model. It calculates the

Authorized licensed use limited to: The University of Toronto. Downloaded on March 11,2026 at 22:04:16 UTC from IEEE Xplore. Restrictions apply.

total (aerodynamic, engine, gravitational) forces and moments, and computes the resulting accelerations along the body axes, as well as the corresponding angular rates. The inputs to this block are the wind and/or turbulence, engine thrust, aerodynamic forces and moments obtained from primary (elevators, ailerons, rudder) and secondary (flaps, slats, stabilizers, airbrakes) surfaces, the land gear mechanism, and the aircraft configuration (weight, geometry). The flight control laws block implements the control laws in a parameterized way, allowing for the selection of various gain scheduling strategies.

The actuation system block describes the nonlinear behavior of the aircraft's primary and secondary actuators. The pilot block generates the desired pilot actions and transforms the pilot commands into surface commands (deflections). Engine dynamics are modeled by a first-order system which produces the corresponding thrust (forces and/or moments).

The outside world block includes the wind and turbulence effects. The wind components change with the orientation of the aircraft, and their evaluation along the body axes of the aircraft necessitates the following two transformations: 1) transformation of the aircraft velocity with respect to the earth axes defined by the angle of attack and the sideslip angle and 2) transformation from the earth axes to body axes using the current Euler angles (roll, yaw, and pitch angles). Turbulence is generated online via Dryden-type second-order filters (Dryden spectra [5]), and its intensity may be selected as light, moderate, or severe.

The sensors block includes three sensor modules providing digitized sensor signals. Each module is equipped with appropriate sensor transducers and transducer failure modes. Two of the sensor modules include an air data computer (ADC), an attitude heading system, and pilot command sensors, while the third one is equipped with a Global Positioning System and an ADC. Two airflow direction indicators (ADI) are located directly opposite and aligned, one on each side of the fuselage. This allows for the computation of an estimate of the AoA. Each ADI measures the local airflow direction at the vane location and each ADI vane has two position transducers in order to provide independent information to each one of the two ADCs. Each sensor module is equipped with a standard voter/monitor fault detection and isolation block. The basic sampling frequency of the overall system is 50 Hz, although certain subsystems run at different frequencies.

III. Sensor Faults and the Fault Detection Method

A. Sensor Faults

The method focuses on the detection of sensor *abrupt* faults, that is faults characterized by response time constants much smaller than those of the aircraft. These faults yield responses characterized by frequency components beyond the aircraft's bandwidth (see Fig. 2).

The following three different types of sensor abrupt faults are considered in this study:

1) constant bias (F1) type faults;
2) sudden sensor noise increase (F2) type faults;
3) failure to zero ("sensor disconnection") (F3) type faults.

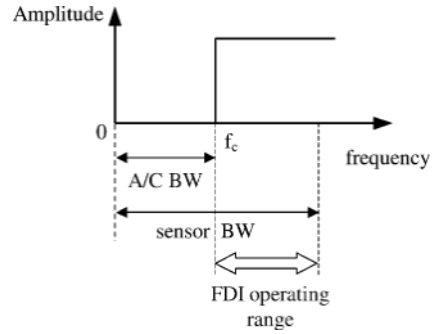

Fig. 2. Fault detection operating frequency range compared to the aircraft dynamics bandwidth.

B. Statistical Fault Detection Method

The aircraft sensor signals to be monitored generally exhibit three main characteristics: *stochasticity* (randomness), *nonstationarity*, and *serial (dynamic) dependency*. Stochasticity is mainly due to the presence of atmospheric effects (such as wind, turbulence), noise, uncertainties, and, sometimes, pilot commands. Nonstationarity (time-dependency of the signal properties) is due to a number of factors, mainly aircraft maneuvering, changing flight conditions, changing aircraft configuration [such as flap/slat (F/S) configuration, weight/center of gravity $(\mathrm{W}/\mathrm{X_{CG}})$ configuration], atmospheric turbulence, as well as nonlinearities. Finally, serial (dynamic) dependency is due to the aircraft dynamics.

The three aforementioned signal characteristics are known to pose specific difficulties to the design of any fault detection method [18], and therefore, they need to be effectively accounted for. Specifically, stochasticity needs to be accounted for in order to achieve proper decision making under uncertainty. This is achieved through the adoption of a statistical time series framework and proper statistical decision making tools (such as hypothesis testing for fault detection at a specified risk level). Nonstationarity removal is necessary for straightforward and effective decision making and fault detection. This is presently achieved via high-pass filtering that removes the low frequency signal components (see [24]), exploiting the fact that abrupt fault signatures are characterized by frequencies that are beyond the aircraft dynamics bandwidth. The remaining serial (dynamic) signal dependency must be also removed in order to facilitate the use of statistical detection schemes which require white (uncorrelated) signal samples on which to operate [18]. As it turns out, this task is tricky for an aircraft flying under various operating and environmental conditions, and is presently accomplished via the use of novel PAR models and respective estimation techniques [19]–[21]. It is, to a significant extent, the capabilities of these models (acting as whitening filters) that ensure the method's effectiveness under various flight conditions. Finally, electronic spikes and/or glitches are frequently present on aircraft signals, and must be distinguished from actual sensor faults in order to avoid false alarms. This is achieved via signal conditioning using a pattern recognition-type procedure.

Authorized licensed use limited to: The University of Toronto. Downloaded on March 11,2026 at 22:04:16 UTC from IEEE Xplore. Restrictions apply.

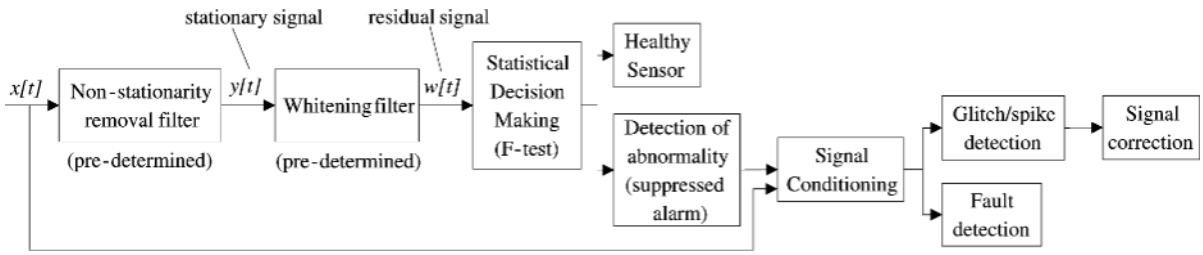

Fig. 3. Flowchart of the fault detection method.

The flowchart of the fault detection method operating on a single sensor signal is depicted in Fig. 3. A more detailed description of the method, including its four basic stages (units) follows.

1) Stage 1—Nonstationarity Removal: Let $x[t]$ designate the monitored sensor signal characterized by non-stationary behavior. Nonstationarity removal is in this case possible to achieve via high-pass digital filtering (see [24]), with the filter pass-band properly selected beyond the aircraft dynamics bandwidth. Let the resulting, stationary, signal be designated as $y[t]$.

2) Stage 2—Serial Dependency Removal: Once nonstationarity has been removed, the serial dependency present in $y[t]$ may be removed through stochastic inverse filtering (whitening). For this purpose, linear AR modeling could be, in principle, used. AR modeling [25] postulates the following type of stochastic signal model:

$$y[t] + \sum_{i=1}^{n} a_i \cdot y[t-i] = w[t], \quad w[t] \sim \mathrm{IID}\mathcal{N}\left(0, \sigma_w^2\right) \quad (1)$$

with t designating normalized time $(t = 1, 2, \ldots)$, a_i the ith AR parameter, n the model order, $w[t]$ an innovations (white) random signal with zero mean and variance σ_w^2, and $\mathrm{IID}(\cdot,\cdot)$ identically independently distributed variables with the indicated mean and variance. The innovations is also referred to as the residual signal, and coincides with the model's one step ahead prediction error.

Nevertheless, it turns out that conventional AR modeling (which is based upon a single signal) is not generally adequate for describing signals that originate from different flights and operating or environmental conditions (especially flights corresponding to different areas of the aircraft's flight envelope). In order to overcome this difficulty, a properly generalized modeling framework is necessary. This is presently provided by the novel class of PAR and their associated estimation techniques. PAR models have been recently introduced (see [19]–[21]) and allow for the effective identification of a system (such as aircraft) under various operating conditions. The PAR model presently used features structure and AR parameters common for all possible flights, but allows for different innovations variances (the heteroscedastic case). For this reason, it is also referred to as a common coefficient pooled AR (CCP-AR) model; see [21]. The common AR parameter vector is estimated via *pooling*, which, in contrast to conventional modeling that uses a single signal, is based upon a *multitude* of signals, each one coming from a different flight.

The mathematical form of the PAR model structure may be obtained by considering the conventional AR form (1) for the jth flight, which may be rewritten as follows:[1]

$$y_j[t] = \boldsymbol{\phi}_j^T[t] \cdot \boldsymbol{\theta} + w_j[t] \quad (2)$$

with

$$\boldsymbol{\phi}_j[t] = [-y_j[t-1] - \cdots - y_j[t-n]]^T \quad \boldsymbol{\theta} = [a_1 \cdots a_n]^T.$$

The PAR model structure, which is valid for any flight j, may be then specified as

$$y_j[t] = \boldsymbol{\phi}_j^T[t] \cdot \boldsymbol{\theta} + w_j[t] \quad (\forall j)\,(\forall t) \quad (3a)$$

$$w_j[t] \sim \mathrm{IID}\mathcal{N}\left(0, \sigma_{w_j}^2\right) \quad \mathrm{Cov}[w_j, w_i] = \sigma_{w_j}^2 \cdot \delta_{j,i} \quad (3b)$$

where the subscript j designates the jth flight, $\boldsymbol{\theta}$ the common AR parameter vector, $\mathrm{Cov}[\cdot,\cdot]$ covariance of the indicated quantities, and $\delta_{j,i}$ the Kronecker delta (0 for $j \neq i$, 1 for $j = i$).

Assuming the availability of signals, each of length $N(t = 1, 2, \ldots, N)$ from a particular, say the jth (for $j = 1, 2, \ldots, M$), flight, estimation of the PAR model of (3) may be accomplished as follows. The use of (3a) and the signal samples from the jth flight leads to

$$\begin{bmatrix} y_j[1] \\ \vdots \\ y_j[N] \end{bmatrix} = \begin{bmatrix} \boldsymbol{\phi}_j^T[1] \\ \vdots \\ \boldsymbol{\phi}_j^T[N] \end{bmatrix} \cdot \boldsymbol{\theta} + \begin{bmatrix} w_j[1] \\ \vdots \\ w_j[N] \end{bmatrix}$$

$$\Longrightarrow \boldsymbol{y}_j = \boldsymbol{\Phi}_j \cdot \boldsymbol{\theta} + \boldsymbol{w}_j. \quad (4)$$

Pooling the expressions of the form (4) together (one on top of the other) for the total of M flights $(j = 1, 2, \ldots, M)$ leads to

$$\boldsymbol{y} = \boldsymbol{\Phi} \cdot \boldsymbol{\theta} + \boldsymbol{w} \quad (5)$$

with

$$\boldsymbol{y} \triangleq \underbrace{\begin{bmatrix} \boldsymbol{y}_1 \\ \boldsymbol{y}_2 \\ \vdots \\ \boldsymbol{y}_M \end{bmatrix}}_{[NM\times 1]} \quad \boldsymbol{\Phi} \triangleq \underbrace{\begin{bmatrix} \boldsymbol{\Phi}_1 \\ \boldsymbol{\Phi}_2 \\ \vdots \\ \boldsymbol{\Phi}_M \end{bmatrix}}_{[NM\times n]} \quad \boldsymbol{w} \triangleq \underbrace{\begin{bmatrix} \boldsymbol{w}_1 \\ \boldsymbol{w}_2 \\ \vdots \\ \boldsymbol{w}_M \end{bmatrix}}_{[NM\times 1]}.$$

[1]Lower/upper case, bold face symbols designate vector/matrix quantities, respectively. The superscript ^{T} designates matrix transposition.

Authorized licensed use limited to: The University of Toronto. Downloaded on March 11,2026 at 22:04:16 UTC from IEEE Xplore. Restrictions apply.

An estimator for the pooled model parameter vector may be then based upon minimization of the trace of the sample residual (innovations) covariance, that is

$$J \triangleq \text{Trace } \widetilde{\text{Cov}}[\boldsymbol{w}] \tag{6}$$

with the tilde indicating sample quantity. This leads to the ordinary least squares estimator for $\boldsymbol{\theta}$

$$\hat{\boldsymbol{\theta}} = (\boldsymbol{\Phi}^T \boldsymbol{\Phi})^{-1} \boldsymbol{\Phi}^T \boldsymbol{y} \tag{7}$$

with the hat designating estimator/estimate (see [20] for an alternative, weighted least squares, estimator). Once $\boldsymbol{\theta}$ has been estimated, the residual (whitened) signals $w_j[t]$ may be obtained via (2) (substituting $\boldsymbol{\theta}$ by $\hat{\boldsymbol{\theta}}$—this is referred to as whitening or inverse filtering), and their respective variances estimated as

$$\hat{\sigma}^2_{w_j} = \frac{1}{N-1} \sum_{t=1}^{N} \hat{w}_j^2[t] \tag{8}$$

with $\hat{w}_j[t]$ designating the obtained jth residual signal.

The previous procedures are performed *a priori* (offline), using available flight data. The selection of an adequate number M of representative flights for PAR signal modeling is of importance for obtaining an accurate signal model, and, consequently, effective fault detection. In general, the higher the number of flights from a variety of conditions, the higher the achieved modeling accuracy. In any case, an adequate model should be confirmed as such by proper model validation procedures (similar to those in [25]).

During an actual flight (online), the current $y[t]$ signal is being whitened through the AR model (1), by employing the available (estimated offline) parameter vector. The whitened (residual) signal $\hat{w}[t]$ is then used in the statistical decision making.

3) Stage 3—Statistical Decision Making: Fault detection is performed online, during a flight, based upon statistical decision making procedures that utilize the current whitened (residual) signal $\hat{w}[t]$. In the healthy case, this signal should be precisely uncorrelated (white) and follow normal $\mathcal{N}(0, \sigma_w^2)$ distribution. Faults cause changes in the signal dynamics, which necessarily result in increased residual variance. Therefore, a formal statistical hypothesis testing problem may be formulated in order to detect faults through the detection of increased residual variance. Designating as σ_w^2 and σ_{wc}^2 the theoretical residual variances corresponding to the healthy sensor and to the current sensor (assumed to be in unknown state), respectively, the statistical hypothesis testing problem may be expressed as

$$\begin{aligned} H_0 &: \frac{\sigma_{wc}^2}{\sigma_w^2} \leq 1 \quad \text{no fault is present} \\ H_1 &: \frac{\sigma_{wc}^2}{\sigma_w^2} > 1 \quad \text{a fault is present.} \end{aligned} \tag{9}$$

As the theoretical variances σ_w^2 and σ_{wc}^2 are normally unavailable, pertinent estimates need to be used. For the local estimation of the current residual variance $\sigma_{wc}^2[t]$ as a function of time, an N'-sample-long sliding data window may be used

$$\hat{\sigma}_{wc}^2[t] = \frac{1}{N'-1} \sum_{k=t-N'+1}^{t} \hat{w}^2[k]. \tag{10}$$

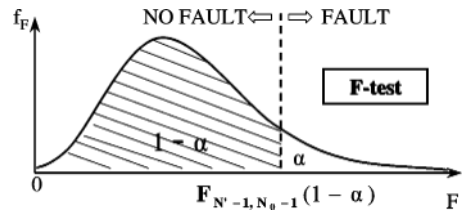

Fig. 4. Schematic representation of the statistical fault detection (F) test (α designates the risk level).

It is noted that the first N_1 residual samples are not taken into account in order to avoid possible transients imposed by the high-pass filter and the PAR modeling. The estimate $\hat{\sigma}_w^2$ (corresponding to the residual variance of the healthy sensor σ_w^2) may be obtained from the PAR modeling (8) corresponding to a similar flight (via a pertinent data basis). Alternatively, it may be estimated from the current residual signal, assuming, for a short period of time, no fault occurrence. In such a case an N_0-sample-long window is used, within which an estimate of σ_w^2 is obtained as

$$\hat{\sigma}_w^2 = \frac{1}{N_0 - 1} \sum_{k=N_1+1}^{N_1+N_0} \hat{w}^2[k]. \tag{11}$$

It should be noted that, in the previous expressions, window lengths need to be properly selected, as very small lengths may not lead to accurate variance estimates, while a large value of N' could lead to a reduction in the method's sensitivity in capturing changes in the residual variance.

Then, in the healthy case (H_0 hypothesis), the test statistic defined as the ratio of the two sample variances follows $\mathcal{F}$ distribution with $N'-1$, N_0-1 degrees of freedom (ratio of chi-square distributions [26]), that is

$$F[t] = \frac{\hat{\sigma}_{wc}^2[t]}{\hat{\sigma}_w^2} \sim \mathcal{F}_{N'-1, N_0-1}. \tag{12}$$

This leads to the following F-test at the α risk level (that is false alarm probability equal to α)

$$F \leq F_u \Longrightarrow H_0 \text{ is accepted} \quad (\text{no fault is detected}) \tag{13a}$$

$$\text{Else} \Longrightarrow H_0 \text{ is rejected} \quad (\text{a fault is detected}) \tag{13b}$$

with $F_u = F_{N'-1, N_0-1}(1-\alpha)$ indicating the distribution's $(1-\alpha)$ critical endpoint (see Fig. 4).

4) Stage 4—Signal Conditioning: Sensor signals are frequently contaminated by electronic glitches and/or spikes. These are characterized by high frequency content as well, and may be easily confused for actual faults and thus lead to potential false alarms. Therefore, once a fault has been detected by the statistical F-test, a signal conditioning procedure capable of distinguishing glitches and spikes from actual abrupt faults is activated.

Signal conditioning may be based upon a first-order differencing scheme. This utilizes the first order differences of the original sensor signal $x[t]$

$$\delta x[t] \triangleq x[t] - x[t-1] \tag{14}$$

Authorized licensed use limited to: The University of Toronto. Downloaded on March 11,2026 at 22:04:16 UTC from IEEE Xplore. Restrictions apply.

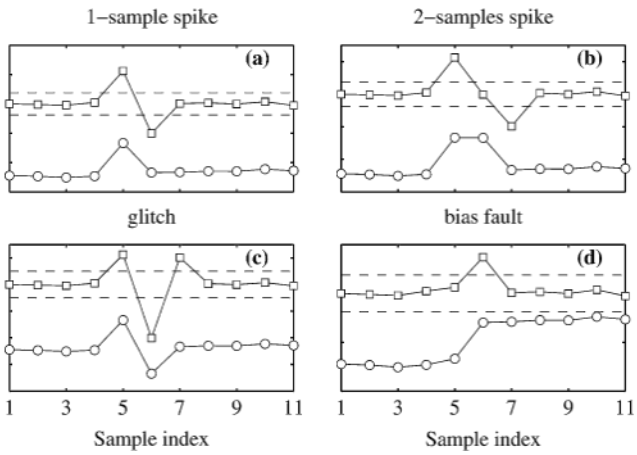

Fig. 5. (a), (b) Spikes, (c) glitch, and (d) an abrupt bias fault along with their first-order differences (-o-: contaminated signal, -□-: first-order differenced contaminated signal, {- - -}: detection threshold).

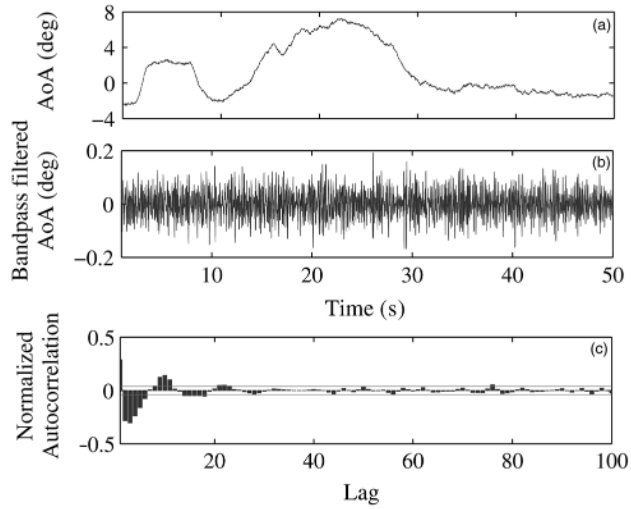

Fig. 6. (a) AoA sensor signal. (b) Bandpass filtered AoA sensor signal. (c) Its normalized sample autocorrelation function (the horizontal lines indicate the limits of statistical significance at the $\alpha = 0.05$ level).

and local time-domain properties of the resulting signal $\delta x[t]$. Fig. 5 depicts typical patterns for a glitch and two different types of spikes (1-sample spike and 2-sample spike), along with their local time-domain characteristics as exhibited in the differenced signal $\delta x[t]$. It is worth noting that in all cases the first-order differenced signal is characterized by an oscillatory (bipolar) behavior [see Fig. 5(a)–(c)] in the neighborhood of the glitch/spike, while in the case of a constant bias fault it behaves like an 1-sample spike in the neighborhood of the bias [see Fig. 5(d)]. These patterns are used for glitch and spike detection.

In the fault detection method, an alarm would be normally issued as soon as a glitch or a spike has occurred, due to the fact that the residual variance increases considerably. In order to avoid false alarms, no alarm is issued (it is, in other words, "suppressed") for the current plus the next two time instants. Within this 3-sample-long time interval, a counter monitors how many times the first-order differenced sensor signal exceeds a predetermined threshold (typically 150%–200% of the first-order differenced signal's nominal range; this is indicated by the dashed horizontal lines in Fig. 5). Glitches and/or spikes exceed this range at least twice, while in the case of an abrupt bias fault, the range is exceeded only once. Thus, glitches and/or spikes are distinguished from abrupt bias faults (F1) or failures to zero (F3). In the case of abruptly increased sensor noise (F2), the distinction of actual faults is simple as the alarm is continuously repeated once the change in the residual variance is detected.

It is further noted that in case the conditioning procedure indicates that the current event is a glitch or spike, a correction is needed. This is necessary because one or more uncorrected signal samples will cause the high-pass filter and the PAR model (whitening filter) to respond, and this may lead to subsequent false alarms. For this reason, the corresponding samples of the sensor signal $x[t]$ are corrected by replacing their values with the last available healthy values. Then the affected samples are refiltered and rewhitened, and the corresponding healthy residuals are obtained in order to continue the procedure. A fault is declared if and only if the conditioning procedure indicates that the detected fault is not a glitch or spike.

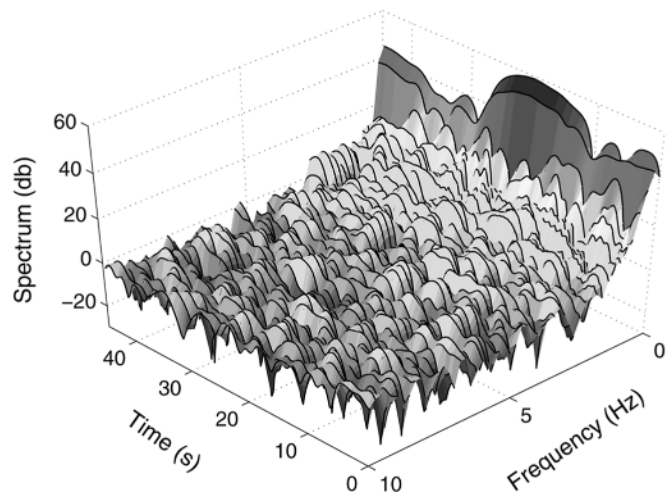

Fig. 7. Non-parametrically estimated time-dependent power spectral density function of the AoA sensor signal (darker colors correspond to higher spectral magnitude).

IV. Abrupt Fault Detection for the AoA Sensor

The fault detection method is now designed and implemented for one of the aircraft's AoA sensors. The sensor signal is recorded at $f_s = 50$ Hz at the location that corresponds to the left ADI vane described in Section II. In all cases, turbulence effects are present, and the sensor signals are additionally corrupted by white measurement noise characterized by standard deviation of $\sigma_n = 0.0625$ [27].

A. Fault Detection Method Design

1) Stage 1—Nonstationarity Removal: A typical healthy AoA signal is depicted in Fig. 6(a). It is evidently stochastic and (at least in the mean) nonstationary. The 3-D representation of the non-parametrically estimated (via the discrete Fourier transform operating on a 256 sample-long moving window and employing a Hanning data window) time-dependent power spectral density function is depicted in Fig. 7. The signal's main

Authorized licensed use limited to: The University of Toronto. Downloaded on March 11,2026 at 22:04:16 UTC from IEEE Xplore. Restrictions apply.

components clearly are in the 0–3 Hz range; thus the frequency cutoff of the high-pass filter (see Fig. 2) is chosen as $f_c = 5$ Hz. The signal is thus filtered (within the 5–25 Hz range) via a Chebyshev I type high-pass filter of order 8. The filtered (resulting) signal is depicted in Fig. 6(b). Its normalized sample autocorrelation function [25] exceeds the limits of statistical significance (at the $\alpha = 0.05$ risk level) for various lags, thus clearly indicating the presence of serial (dynamic) dependency [see Fig. 6(c)].

2) Stage 2—Serial Dependency Removal: The subsequent estimation of long $\mathrm{PAR}(n)$ models of various orders, leads to a $\mathrm{PAR}(150)$ representation which is estimated based upon $M =$ 50 different (corresponding to various flights) healthy filtered signals. The final estimated model is formally validated, as its sample residual autocorrelation does not exceed the critical (at the $\alpha = 0.05$ level) limits [25].

3) Stage 3—Statistical Decision Making: The fault detection method's parameters are selected as follows. N_1 is selected equal to 350 samples, so that the transients imposed by the high-pass filter and the long PAR model may adequately decay. N_0 is also selected sufficiently large ($N_0 = 150$ samples), such that a representative value of the (healthy) residual variance is obtained, assuming that no faults have occurred within the initial [0, 10] s (500 samples) time interval. The risk level for the F-test is appropriately selected $(\alpha = 10^{-4})$ for preventing false alarm occurrence (which could be due to small fluctuations, especially in the neighborhood of glitches and/or spikes, in the residual variance). Finally, the sliding window length N' is selected equal to 100 in order to ensure sufficient sensitivity to residual variance changes.

4) Stage 4—Signal Conditioning: As described in Section III-B4.

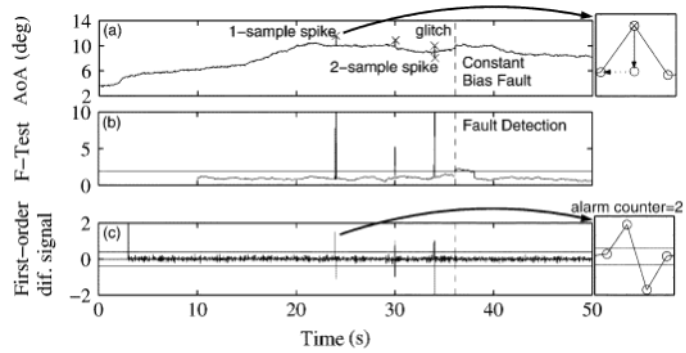

Fig. 8. AoA constant bias fault (F1): (a) faulty sensor signal; (b) F-test (the horizontal line indicates the statistical limit at the $\alpha = 10^{-4}$ risk level); (c) first-order differenced signal (the horizontal lines indicate the $\pm 150\%$ threshold). (The dashed vertical line indicates the time of fault occurrence.)

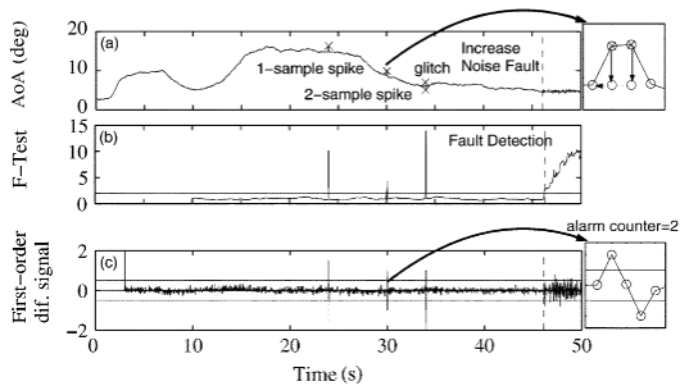

Fig. 9. AoA sensor noise increase (F2): (a) faulty sensor signal; (b) F-test (the horizontal line indicates the statistical limit at the $\alpha = 10^{-4}$ risk level); (c) first-order differenced signal (the horizontal lines indicate the $\pm 150\%$ threshold). (The dashed vertical line indicates the time of fault occurrence.)

B. AoA Fault Detection Results

Three distinct types of abrupt faults are considered for the AoA sensor. A representative case from each fault type is presented next, while summary results obtained via Monte Carlo experiments are reported in the sequel.

1) Constant Bias Fault (F1): In this case, a flight from the clean flight regime $(\mathrm{Flap/Slat} = 0°/0°)$ is employed. The aircraft's initial Mach number is 0.50, the initial altitude is 22 000 ft, the aircraft weight is 37 700 lbs, and its longitudinal center of gravity is at $x_{\mathrm{CG}} = 19\%$ of the mean aerodynamic chord (MAC). Light turbulence is continuously present. During the flight, the aircraft's AoA achieves a high value of about 10.5°. A constant bias fault of 0.5 deg is introduced a little later, at $t = 36.1$ s. The fault itself is hardly visible in Fig. 8(a), but, for clarity, the time instant of fault occurrence is indicated by a vertical dashed line. The signal is also corrupted by a glitch, an 1-sample spike and a 2-sample spike [see Fig. 8(a)].

The performance of the fault detection method is assessed through examination of the F-test, which is, for each time instant, graphically depicted in Fig. 8(b). Evidently, despite its small magnitude, the constant bias fault is clearly detected, with the minimum possible (necessitated by the method's design) detection delay of three samples (0.06 s). It is also important to observe that, although the F-test (expectedly) detects the presence of the glitch and the spikes, no false alarms are issued as these events are effectively distinguished by the signal conditioning unit which operates on the differenced signal [see Fig. 8(c)]. Indeed, as depicted in the detail [right subplot of Fig. 8(c)] the spike is identified as such. The AoA signal is then corrected (see Subsection III-B4), as indicated in the right subplot of Fig. 8(a), and the procedure is continued with the corrected AoA signal.

2) Increased Sensor Noise (F2) Fault: In this case, a flight from the takeoff flight regime $(\mathrm{Flap/Slat} = 20°/25°)$ is employed. The aircraft's initial Mach number is 0.30, the initial altitude is 500 ft, the aircraft weight is 43 400 lbs, and its longitudinal center of gravity is at x_{CG} =23%. Light turbulence is continuously present. During the flight, the aircraft attains significant AoA (maximum of about 16.2°). An increased sensor noise fault (the noise standard deviation is increased from 0.0625 to 0.4472) is introduced at $t = 46.1$ s. For purposes of clarity this time instant is indicated by a vertical dashed line in Fig. 9(a). Like before, the signal is also corrupted by a glitch, an 1-sample spike and a 2-sample spike [see Fig. 9(a)].

The performance of the fault detection method is assessed through examination of the F-test, which is, for each time instant, graphically depicted in Fig. 9(b). The increased sensor noise fault is, indeed, very clearly detected. The detection delay is very reasonable (9 samples, that is 0.18 s). Like before, no

Authorized licensed use limited to: The University of Toronto. Downloaded on March 11,2026 at 22:04:16 UTC from IEEE Xplore. Restrictions apply.

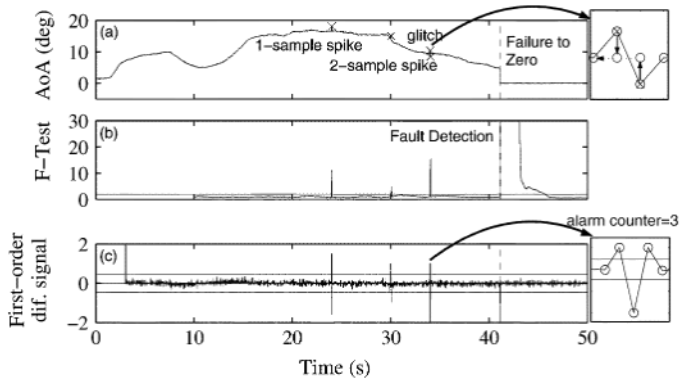

Fig. 10. AoA failure to zero (F3): (a) faulty sensor signal; (b) F-test (the horizontal line indicates the statistical limit at the $\alpha = 10^{-4}$ risk level); (c) first-order differenced signal (the horizontal lines indicate the $\pm 150\%$ threshold). (The dashed vertical line indicates the time of fault occurrence.)

false alarms are observed, as the glitch and the spikes are correctly distinguished by the signal conditioning scheme, and are properly corrected (see the right subplots).

3) Failure to Zero (F3): In this case, a flight from the landing flight regime $(\mathrm{Flap/Slat} = 40°/25°)$ is employed. The aircraft's initial Mach number is 0.34, the initial altitude is 14 000 ft, the aircraft weight is 35 750 lbs, and its longitudinal center of gravity is at x_{CG} =19%. Light turbulence is continuously present. During the flight, the aircraft's AoA attains a maximum of about 17°. A failure to zero (sensor "disconnection") is introduced at $t = 41.1$ s. This time instant is indicated by a vertical dashed line in Fig. 10(a). Like before, the signal is also corrupted by a glitch, a 1-sample spike and a 2-sample spike [see Fig. 10(a)].

The performance of the fault detection method is assessed through examination of the F-test, which is, for each time instant, graphically depicted in Fig. 10(b). The failure to zero is very clearly detected, with the minimum possible delay of three samples (0.06 s). Like in the previous cases, no false alarms are observed, as the glitch and the spikes are correctly distinguished by the signal conditioning scheme, and are properly corrected (see the right subplots).

4) Monte Carlo Summary Results: Summary results obtained via Monte Carlo experiments for each one of the fault types (F1, F2, F3) are presented in Tables I–III, respectively (40 runs per fault magnitude). In all test cases, the sensor signals correspond to various flight conditions and pilot commands, while the faults occur at different time instants. Light turbulence is always present. The results indicate the method's very good performance characteristics, as the faults are almost always successfully detected. In fact, the detection rate is 100% for almost all cases; the only exception being the failure to zero (F3) case, where the detection rate is 95% for the class of the smallest (0.3°–2.25°) fault magnitudes. It is also important to observe that no false alarms are issued, while the detection delays are judged as reasonable. Regarding the increased noise (F2) fault type, it should be mentioned that faults corresponding to lower than the reported levels of noise present increased difficulty in their detection. This is expected, because the signal, in its healthy state, possesses its own variability, plus it is also noise corrupted. On the other hand, faults corresponding to higher levels of noise present no difficulty in their detection. Although some interrelation between the detection delay and the noise standard deviation ratio may seem to exist (see Table II), no definite trend can be established.

TABLE I
SUMMARY OF MONTE CARLO FAULT DETECTION RESULTS FOR THE AOA CONSTANT BIAS (F1) FAULT (40 RUNS PER FAULT MAGNITUDE)

Constant Bias Fault (F1)						
Overall false alarm rate: 0%				Overall detection rate: 100%		
Fault Magnitude (deg)	0.5	0.6	0.7	0.8	0.9	1.0
Detection Delay (samples)	Percent of cases					
3	42.5	100	100	85	100	100
4	12.5	-	-	2.5	-	-
5	12.5	-	-	2.5	-	-
6	-	-	-	2.5	-	-
7	-	-	-	2.5	-	-
8	-	-	-	-	-	-
9	-	-	-	5	-	-
10	7.5	-	-	-	-	-
11	25	-	-	-	-	-

TABLE II
SUMMARY OF MONTE CARLO FAULT DETECTION RESULTS FOR THE AOA INCREASED NOISE (F2) FAULT (40 RUNS PER FAULT MAGNITUDE)

Increased Noise Fault (F2)						
Overall false alarm rate: 0%				Overall detection rate: 100%		
Noise standard deviation increase ratio	7	7.15	7.33	7.5	7.7	7.83
Detection Delay (samples)	Percent of cases					
7	-	-	97.5	-	-	-
8	-	-	2.5	-	-	-
9	-	100	-	100	-	-
11	-	-	-	-	100	-
15	2.5	-	-	-	-	87.5
16	-	-	-	-	-	5
17	-	-	-	-	-	5
18	-	-	-	-	-	2.5
22	5	-	-	-	-	-
23	90	-	-	-	-	-
29	2.5	-	-	-	-	-

5) Discussion: As with any fault detection method, the method's performance depends on the proper selection (tuning) of its design parameters. These include the risk level α for the statistical hypothesis testing, the various window lengths, the filter cutoff frequency, as well as the parameters associated with PAR signal modeling. In this case study, tuning was done in an attempt to minimize false alarms while keeping high detection rates. The importance of proper PAR modeling in this context

Authorized licensed use limited to: The University of Toronto. Downloaded on March 11,2026 at 22:04:16 UTC from IEEE Xplore. Restrictions apply.

TABLE III
SUMMARY OF MONTE CARLO FAULT DETECTION RESULTS FOR THE AOA FAILURE TO ZERO (F3) (40 RUNS PER FAULT MAGNITUDE RANGE)

Failure to zero (F3)						
Overall false alarm rate: 0%						Overall detection rate: 99.17%
Fault Magnitude Range (deg)	0.3-2.25	2.26-4.21	4.22-6.17	6.18-8.13	8.14-10.09	10.1-12.05
Detection Delay (samples)	Percent of cases					
3	95	100	100	100	100	100

should not be underestimated, as it plays a predominant role in the method and its attained performance. It is thus necessary for an adequate number of flights, corresponding to various conditions, to be included in the modeling, and, also, for an adequately high model order to be selected. Although case dependent, both parameters are generally expected to be in the order of several tens. Model order selection may be facilitated by the use of proper criteria, and the adequacy of both selected parameters may be confirmed via model validation techniques [25]. Finally, in the case that PAR signal modeling proves inadequate, alternative, more elaborate, models, such as pooled ARMA models, functionally pooled models, or pooled nonlinear ARMA models (see [21]), may be also used.

V. CONCLUSION

In this brief, a statistical method capable of independently monitoring a single aircraft sensor (the so-called one-versus-one case), and thus enhancing its reliability and the overall aircraft safety, was introduced. The method is based on a statistical time series framework accounting for random effects and uncertainties, and exploits the fact that abrupt faults are characterized by time constants smaller than those of the aircraft. It employs monitored signal nonstationarity removal, signal whitening via novel PAR modeling, statistical decision making, as well as electronic spike/glitch removal logic. The method's main advantages are simplicity, applicability to a wide variety of aircraft operating conditions, the handling of uncertainties, no need for additionally monitored signals, and no need for physics-based aircraft dynamics models.

The method was implemented within the simulation environment of a small commercial aircraft, which accounts for nonlinear dynamics, controls, wind effects, turbulence, and sensor noise, and its effectiveness was demonstrated via test cases and Monte Carlo experiments pertaining to abrupt faults occurring in an angle-of-attack sensor.

ACKNOWLEDGMENT

The authors would like to thank the project partners for their contributions and useful comments. They would also like to thank the associate editor and four anonymous referees for their constructive comments that helped in improving the manuscript.

REFERENCES

[1] C. Hajiyev and F. Caliskan, "Sensor/actuator fault diagnosis based on statistical analysis of innovation sequence and robust Kalman filtering," *Aerosp. Sci. Technol.*, vol. 4, pp. 415–422, 2000.

[2] F. Caliskan and C. Hajiyev, "Innovation sequence application to aircraft sensor fault detection: Comparison of checking covariance matrix algorithms," *ISA Trans.*, vol. 39, pp. 47–56, 2000.

[3] T. E. Menke and P. S. Maybeck, "Sensor/actuator failure detection in the Vista F-16 by multiple model adaptive estimation," *IEEE Trans. Aerosp. Electron. Syst.*, vol. 31, no. 4, pp. 1218–1228, Oct. 1995.

[4] Y. Zhang and X. R. Li, "Detection and diagnosis of sensor and actuator failures using IMM estimator," *IEEE Trans. Aerosp. Electron. Syst.*, vol. 34, no. 4, pp. 1293–1312, Oct. 1998.

[5] A. Zolghadri, "A redundancy-based strategy for safety management in a modern civil aircraft," *Control Eng. Practice*, vol. 8, pp. 545–554, 2000.

[6] J. D. Boškovic and R. K. Mehra, "Multiple-model adaptive flight control scheme for accommodation of actuator failures," *J. Guidance, Control, Dyn.*, vol. 25, no. 4, pp. 712–724, 2002.

[7] X. Zhang, T. Parisini, and M. M. Polycarpou, "Sensor bias fault isolation in a class of nonlinear systems," *IEEE Trans. Autom. Control*, vol. 50, no. 3, pp. 370–376, Mar. 2005.

[8] A. Marcos, S. Ganguli, and G. J. Balas, "An application of $\mathcal{H}_\infty$ fault detection and isolation to a transport aircraft," *Control Eng. Practice*, vol. 13, pp. 105–119, 2005.

[9] M. Mattei, G. Paviglianiti, and V. Scordamaglia, "Nonlinear observers with $\mathcal{H}_\infty$ performance for sensor fault detection and isolation: A linear matrix inequality design procedure," *Control Eng. Practice*, vol. 13, pp. 1271–1281, 2005.

[10] F. Amato, C. Cosentino, M. Mattei, and G. Paviglianiti, "A direct/functional redundancy scheme for fault detection and isolation on an aircraft," *Aerosp. Sci. Technol.*, vol. 10, pp. 338–345, 2006.

[11] D. L. Mattern, L. C. Jaw, T.-H. Guo, R. Graham, and W. McCoy, "Using neural networks for sensor validation," presented at the 34th AIAA/ASME/SAE/ASEE Joint Propulsion Conf. Exhibit, Cleveland, OH, 1998, AIAA 98-3547.

[12] M. R. Napolitano, G. Silvestri, D. A. Windon, J. L. Casanova, and M. Innocenti, "Sensor validation using hardware-based on-line learning neural network," *IEEE Trans. Aerosp. Electron. Syst.*, vol. 34, no. 2, pp. 456–468, Apr. 1998.

[13] M. R. Napolitano, Y. An, and B. A. Seanor, "A fault tolerant flight control system for sensor and actuator failures using neural networks," *Aircraft Des.*, vol. 3, pp. 103–128, 2000.

[14] C. Latorre and B. Tranchero, "Neural network based virtual sensors in flight control systems," in *Proc. 15th IFAC Symp. Autom. Control Aerosp.*, Bologna, Italy, 2001, pp. 416–421.

[15] M. R. Napolitano, D. A. Windon, J. L. Casanova, and M. Innocenti, "A comparison between Kalman filter and neural network approaches for sensor validation," presented at the AIAA Guid., Navigation Control Conf., San Diego, CA, 1996, Paper AIAA 96-3894.

[16] O. M. Golan, M. Idan, and R. Meir, "Weak model based approach for fault detection and isolation of sensors in flight control systems," presented at the AIAA Guid., Navigation, Control Conf., Denver, CO, 2000, Paper AIAA 2000-4040.

[17] M. Oosterom and R. Babuska, "Virtual sensor for fault detection and isolation in flight control systems—Fuzzy modeling approach," in *Proc. 39th IEEE Conf. Dec. Control*, Sydney, Australia, Dec. 2000, pp. 2645–2650.

[18] M. Basseville and I. V. Nikiforov, *Detection of Abrupt Changes: Theory and Application*. Englewood Cliffs, NJ: Prentice-Hall, 1993.

[19] J. S. Sakellariou, K. A. Petsounis, and S. D. Fassois, "On board fault detection and identification in railway vehicle suspensions via a functional model based method," in *Proc. Int. Conf. Noise Vibration Eng.*, Leuven, Belgium, 2002, pp. 1323–1332.

Authorized licensed use limited to: The University of Toronto. Downloaded on March 11,2026 at 22:04:16 UTC from IEEE Xplore. Restrictions apply.

[20] F. P. Kopsaftopoulos and S. D. Fassois, "Identification of stochastic systems under multiple operating conditions: the vector dependent FP-ARX parametrization," presented at the 14th Mediterranean Conf. Control Autom., Ancona, Italy, 2006, Paper 1700807.

[21] D. G. Dimogianopoulos, J. D. Hios, and S. D. Fassois, "Statistical fault detection and identification in aircraft systems via functionally pooled nonlinear modelling of flight data dependencies," presented at the 25th Int. Congress Aeronautical Sci., Hamburg, Germany, 2006, Paper ICAS 2006-6.2.4.

[22] U. Ciniglio and L. Verse, "ADFCS bare aircraft simulation tools: Model description and user manual," Centro Italiano Ricerche Aerospaziali, Italy, Tech. Rep. CIRA-TR-98-112, 1999.

[23] U. Ciniglio and L. Verse, "ADFCS Fly-by-Wire architecture simulation model: User manual," Centro Italiano Ricerche Aerospaziali, Italy, Tech. Rep. CIRA-TR-SIV-99-099, 1999.

[24] R. Ben Mrad, S. D. Fassois, J. A. Levitt, and B. I. Bachrach, "On-board prediction of power consumption in automobile active suspension systems—Parts I and II," *J. Mech. Syst. Signal Process.*, vol. 10, pp. 135–169, 1996.

[25] G. E. P. Box, G. M. Jenkins, and G. C. Reinsel, *Time Series Analysis: Forecasting and Control*, 3rd ed. Englewood Cliffs, NJ: Prentice-Hall, 1994.

[26] E. R. Dougherty, *Probability and Statistics for the Engineering, Computing and Physical Sciences*. Englewood Cliffs, NJ: Prentice-Hall, 1990.

[27] K. Rosenberg, "Sensor characteristics and fault scenarios," BAE Systems, Rochester, U.K., Tech. Rep. TN-SG-5640105, 2001.

Authorized licensed use limited to: The University of Toronto. Downloaded on March 11,2026 at 22:04:16 UTC from IEEE Xplore. Restrictions apply.