REVISION RECORD			
LTR	ECO NO:	APPROVED:	DATE:

Encoder

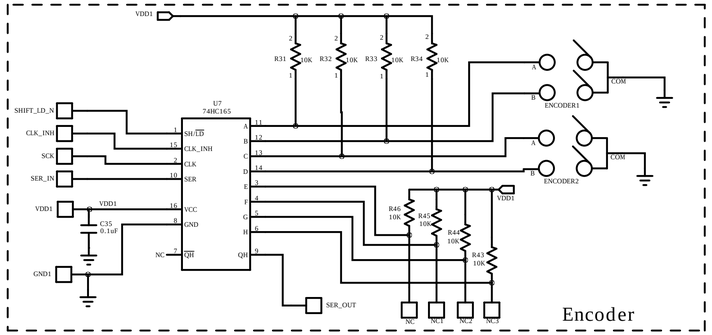

Temp sensor

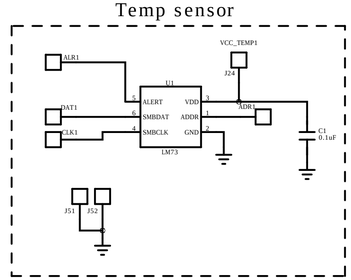

Bar Graph Board

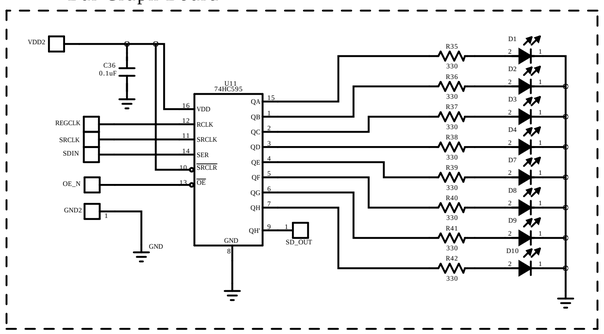

Audio Amp

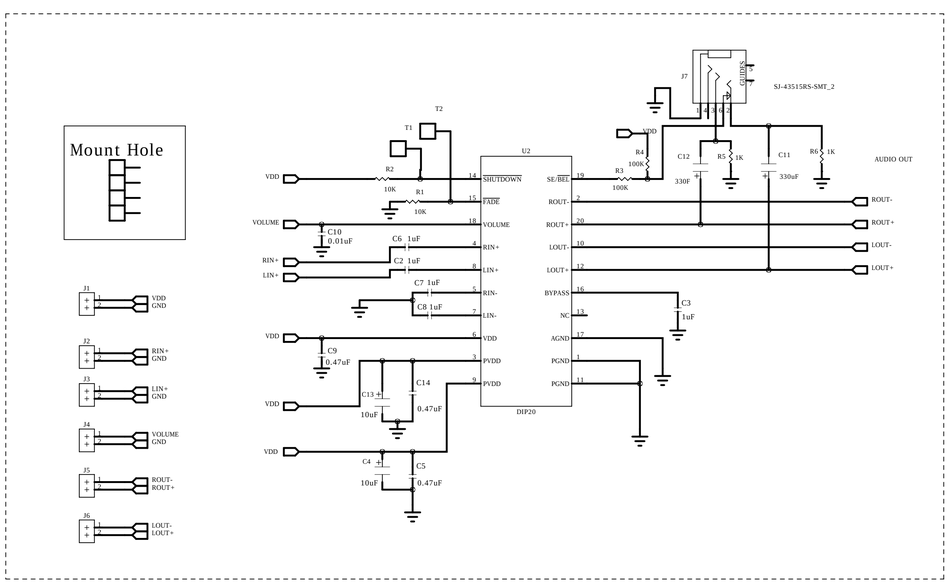

Radio Board

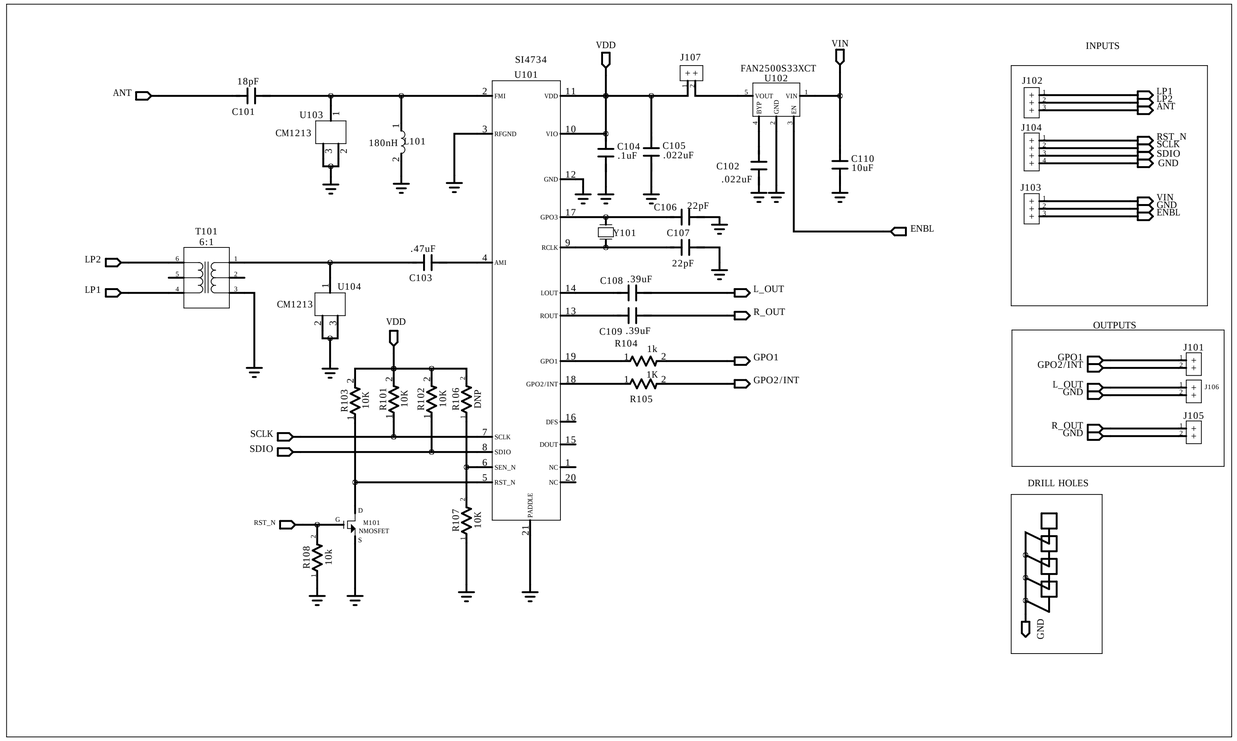

DRAWN:	DATED: July 2013	COMPANY: TekBots- Oregon State University	
CHECKED:	DATED:	TITLE: Radio Board (radio.2)	
QUALITY CONTROL:	DATED:	CODE:	SIZE: D / DRAWING NO: 0 / REV: 0
RELEASED:	DATED:	SCALE:	SHEET: 1 OF 1