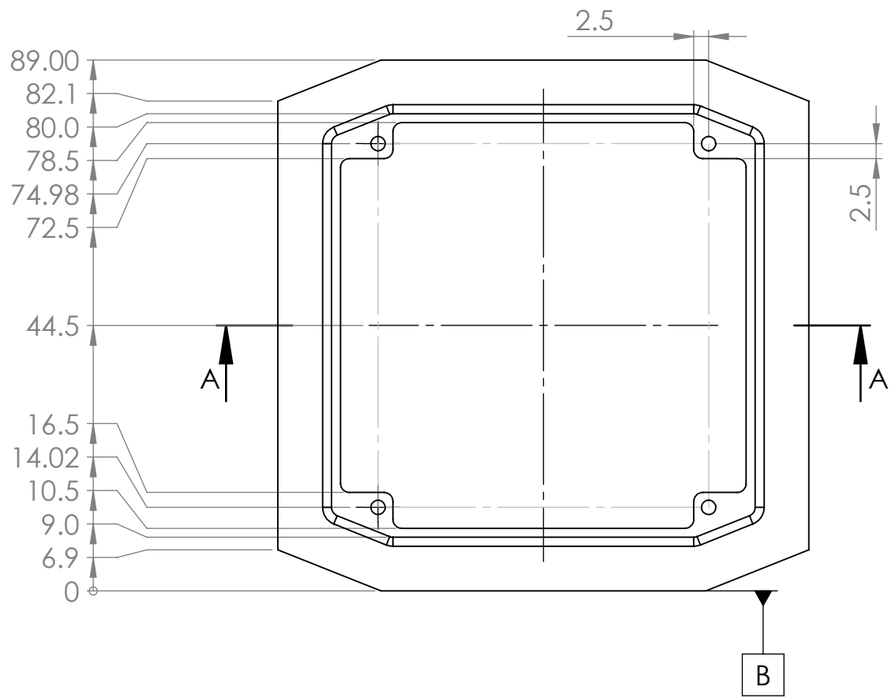

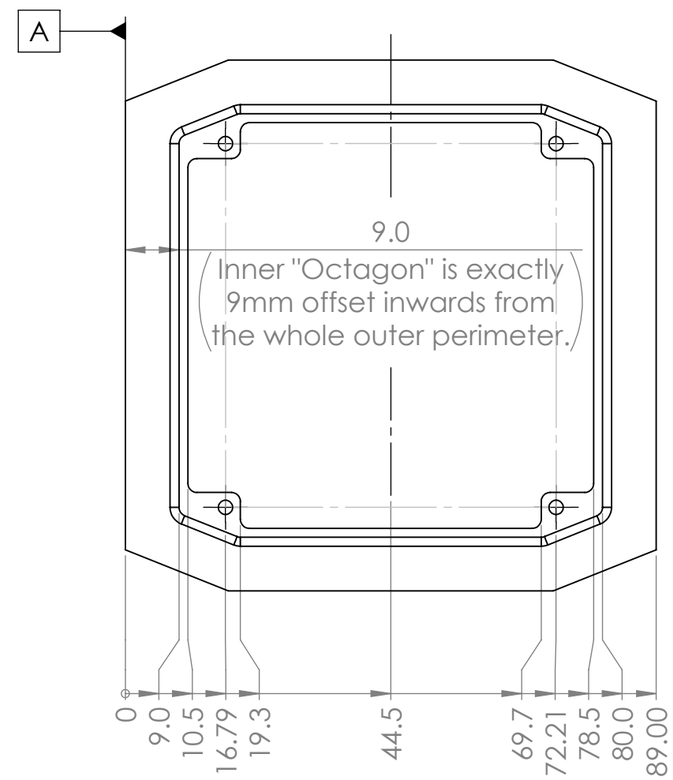

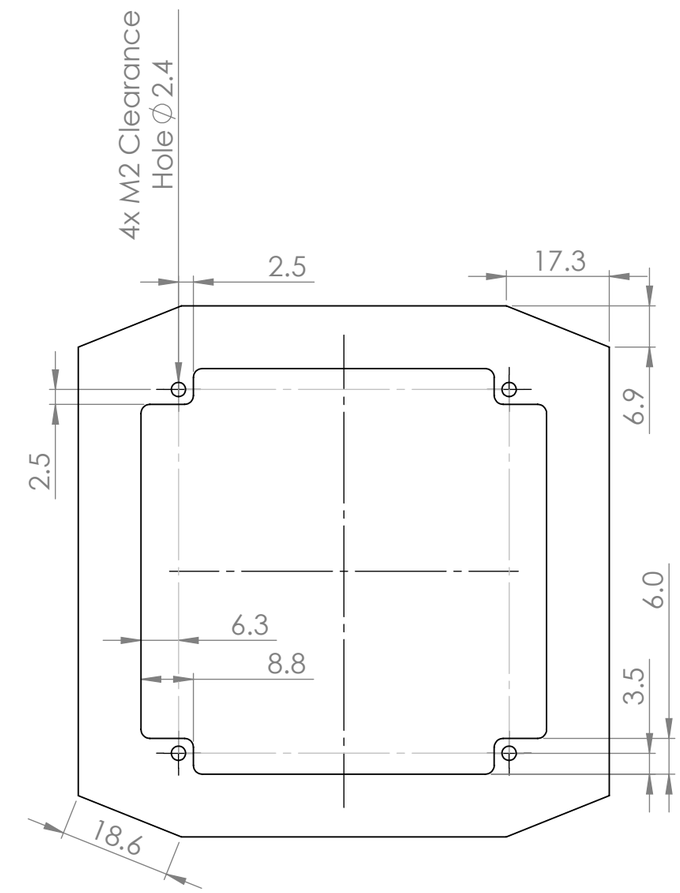

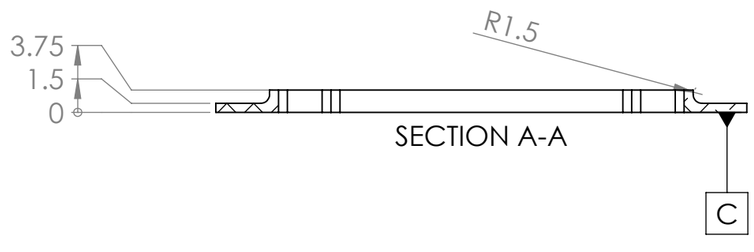

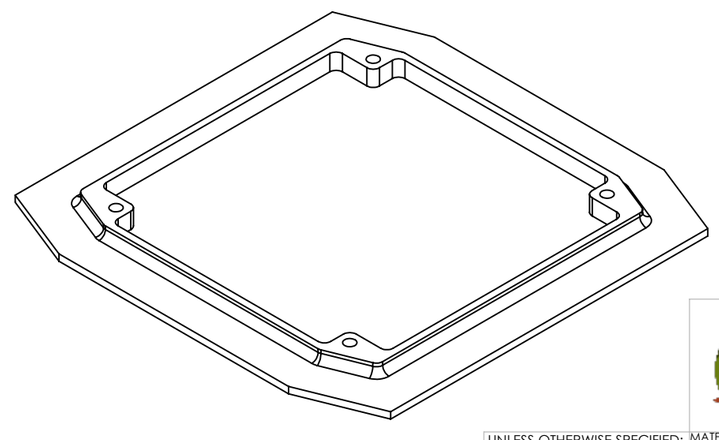

	NAME	DATE
DRAWN	Hayden Reinhold	12/23/2020
CHECKED	-	12/23/2020
ENG APPR.		
MFG APPR.		

Description:

Bracket to hold Zaxis_magnetorquer

UNLESS OTHERWISE SPECIFIED:
DIMENSIONS ARE IN MILLIMETER
TOLERANCES:
ONE PLACE DECIMAL ±0.1
TWO PLACE DECIMAL ±0.05

MATERIAL 6061-T6 Aluminum
FINISH -
WEIGHT (REF)
DO NOT SCALE DRAWING

COMMENTS:
1. All Fillets Radius 1.5mm or Smaller
2. Break All Edges

DWG. NO. Zaxis_bottom
REV A
SIZE B
SCALE: 1:1
SHEET 1 OF 1

SOLIDWORKS Educational Product. For Instructional Use Only.