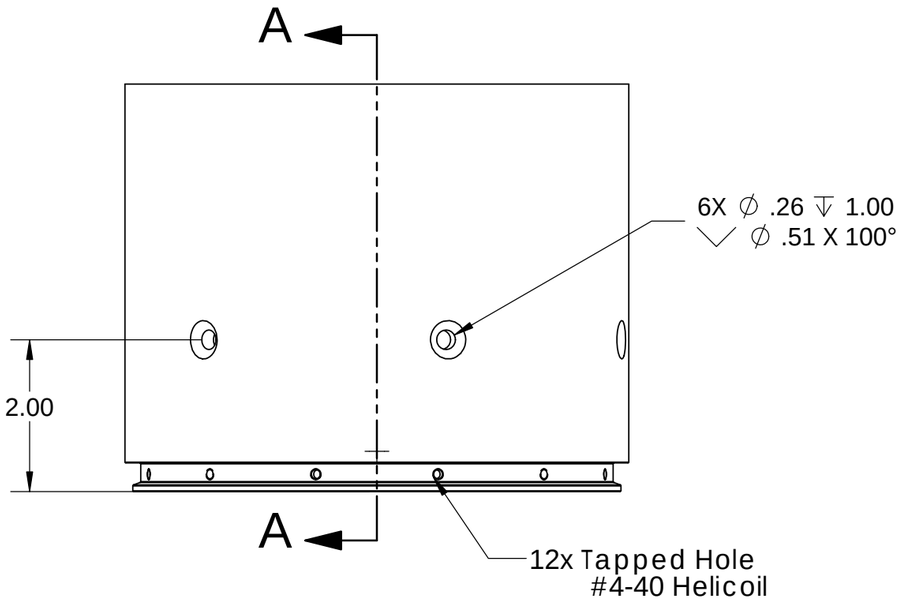

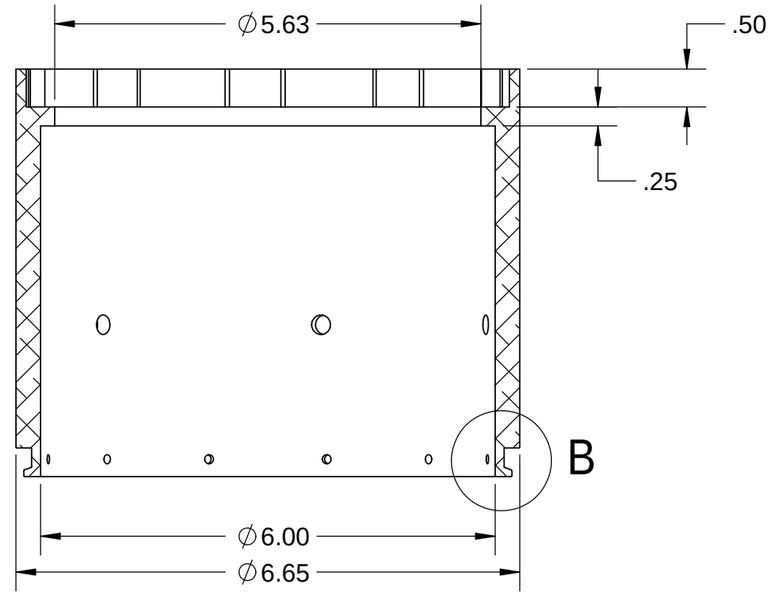

SECTION A-A

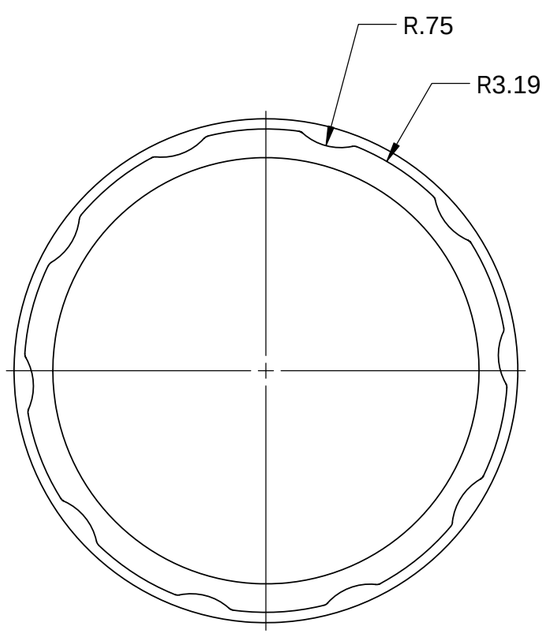

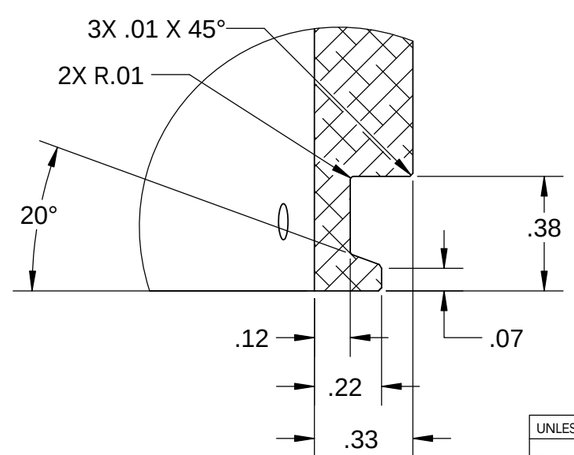

DETAIL B

SCALE 2 : 1

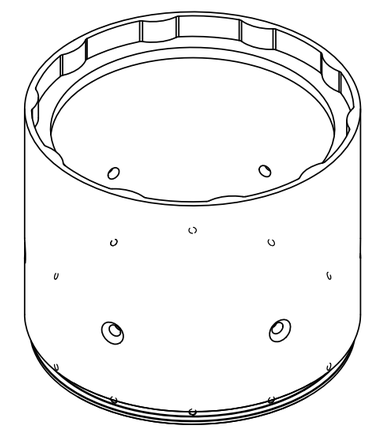

BREAK ALL SHARP EDGES

UNLESS OTHERWISE SPECIFIED:		NAME	DATE
DIMENSIONS ARE IN INCHES TOLERANCES: TWO PLACE DECIMAL ±.01 THREE PLACE DECIMAL ±.005	DRAWN		
	CHECKED		
	ENG APPR.		
	MFG APPR.		
INTERPRET GEOMETRIC TOLERANCING PER:	Q.A.		
MATERIAL 6061 T6 ALUM	COMMENTS:		
FINISH			
DO NOT SCALE DRAWING			

TITLE:

NCS LOWER RING

SIZE	DWG. NO.	REV
B	lower_ring_V3	

SCALE: 1:2 | WEIGHT: | SHEET 1 OF 1

SOLIDWORKS Educational Product. For Instructional Use Only.