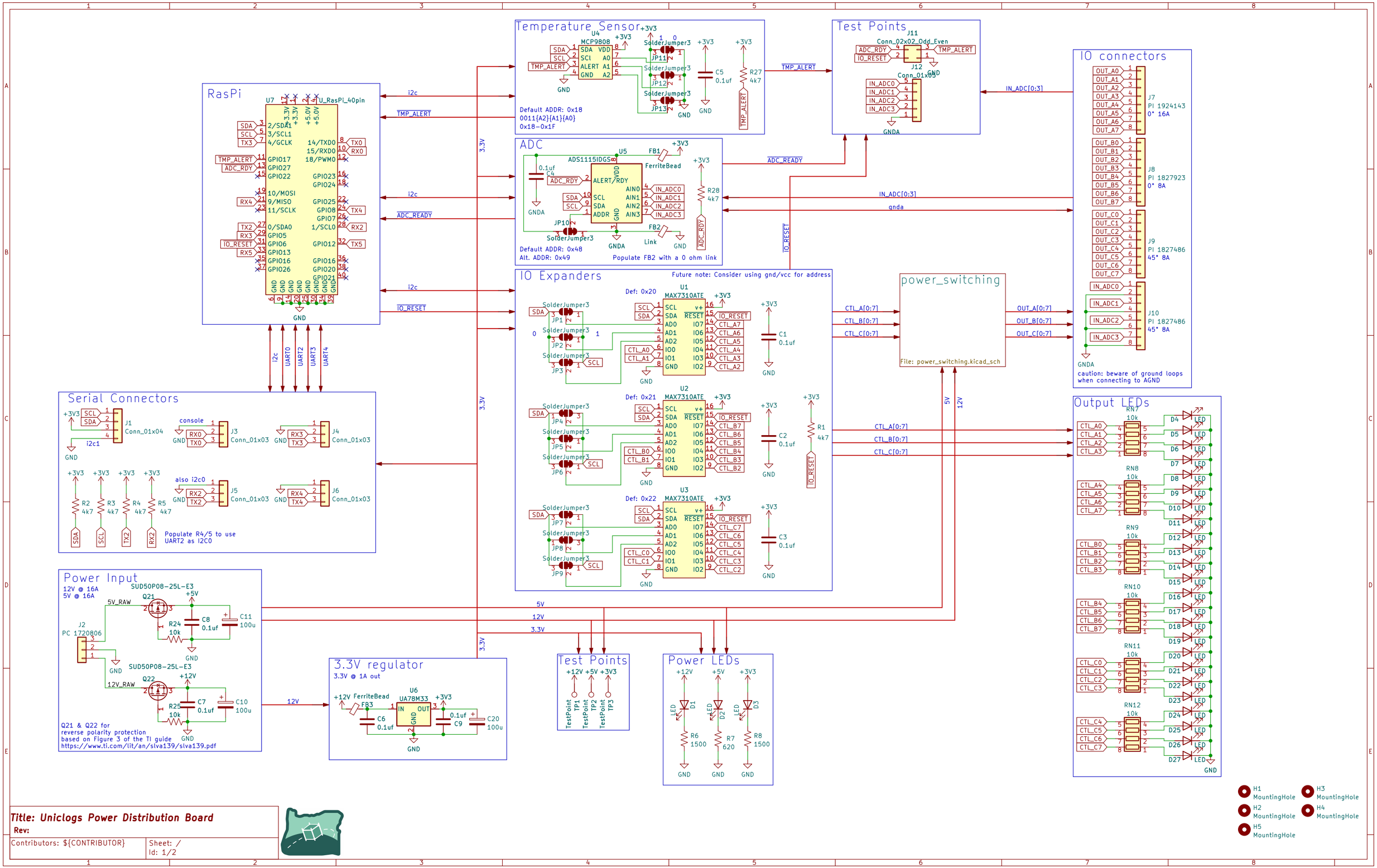
Temperature Sensor
U4
MCP9808
Default ADDR: 0x18
0011{A2}{A1}{A0}
0x18–0x1F
Test Points
J11
Conn_02x02_Odd_Even
J12
Conn_01x05
IO connectors
J7
PI 1924143
0° 16A
J8
PI 1827923
0° 8A
J9
PI 1827486
45° 8A
J10
PI 1827486
45° 8A
caution: beware of ground loops
when connecting to AGND
RasPi
U7
U_RasPi_40pin
ADC
U5
ADS1115IDGS
Default ADDR: 0x48
Alt. ADDR: 0x49
Populate FB2 with a 0 ohm link
IO Expanders
Future note: Consider using gnd/vcc for address
U1
Def: 0x20
MAX7310ATE
U2
Def: 0x21
U3
Def: 0x22
power_switching
File: power_switching.kicad_sch
Serial Connectors
J1
Conn_01x04
J3
Conn_01x03
console
J4
Conn_01x03
J5
Conn_01x03
also i2c0
J6
Conn_01x03
Populate R4/5 to use
UART2 as I2C0
Output LEDs
RN7
RN8
RN9
RN10
RN11
RN12
Power Input
12V @ 16A
5V @ 16A
SUD50P08-25L-E3
Q21 & Q22 for
reverse polarity protection
based on Figure 3 of the TI guide
https://www.ti.com/lit/an/slva139/slva139.pdf
3.3V regulator
3.3V @ 1A out
U6
UA78M33
Test Points
Power LEDs
H1 MountingHole
H2 MountingHole
H3 MountingHole
H4 MountingHole
H5 MountingHole
Title: Uniclogs Power Distribution Board
Rev:
Contributors: ${CONTRIBUTOR}
Sheet: /
Id: 1/2

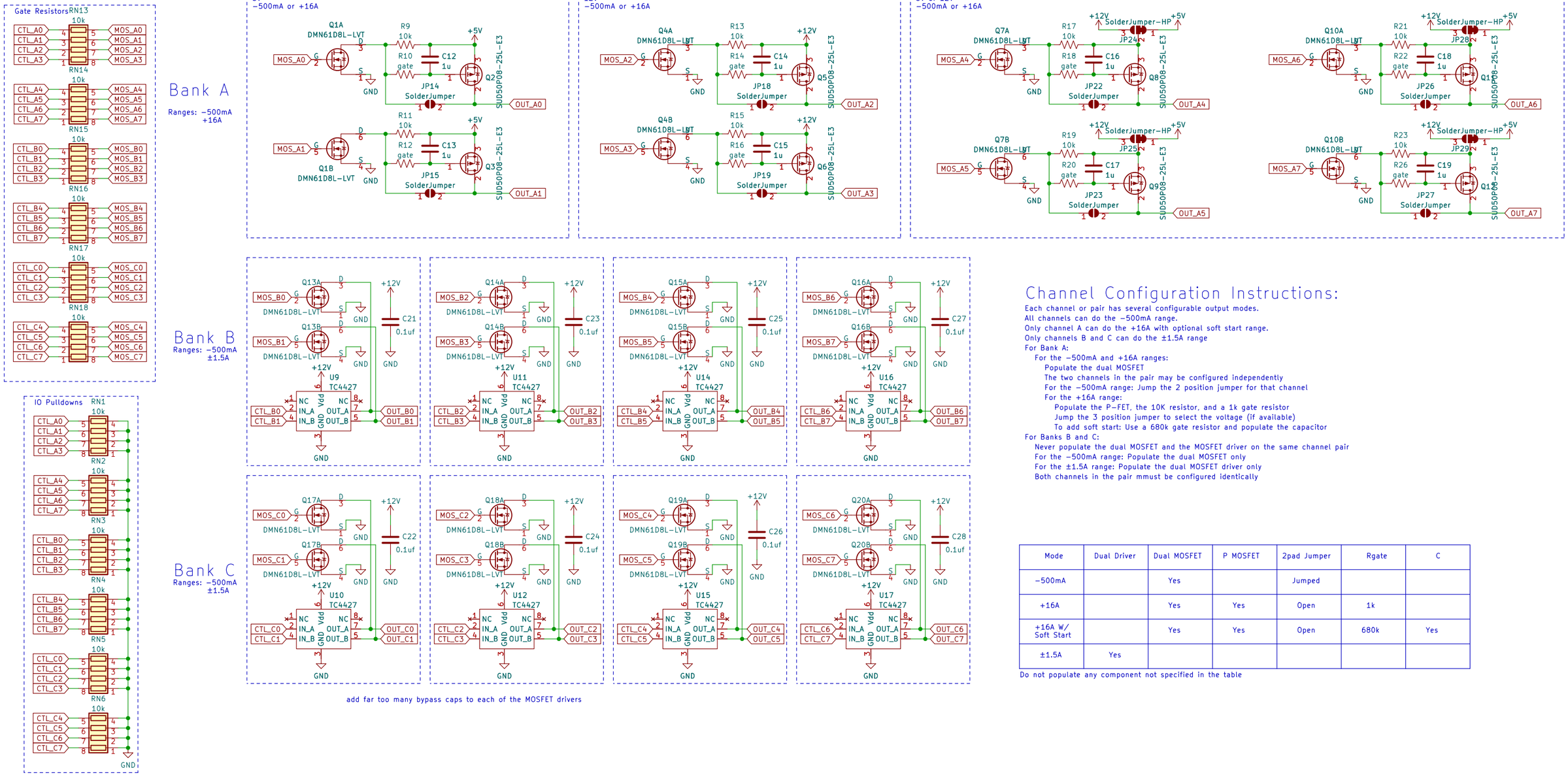

add far too many bypass caps to each of the MOSFET drivers

Channel Configuration Instructions:

Each channel or pair has several configurable output modes.
All channels can do the −500mA range.
Only channel A can do the +16A with optional soft start range.
Only channels B and C can do the ±1.5A range
For Bank A:
- For the −500mA and +16A ranges:
  - Populate the dual MOSFET
  - The two channels in the pair may be configured independently
  - For the −500mA range: Jump the 2 position jumper for that channel
  - For the +16A range:
    - Populate the P-FET, the 10K resistor, and a 1k gate resistor
    - Jump the 3 position jumper to select the voltage (if available)
    - To add soft start: Use a 680k gate resistor and populate the capacitor

For Banks B and C:
- Never populate the dual MOSFET and the MOSFET driver on the same channel pair
- For the −500mA range: Populate the dual MOSFET only
- For the ±1.5A range: Populate the dual MOSFET driver only
- Both channels in the pair mmust be configured identically

Mode	Dual Driver	Dual MOSFET	P MOSFET	2pad Jumper	Rgate	C
−500mA		Yes		Jumped		
+16A		Yes	Yes	Open	1k	
+16A W/ Soft Start		Yes	Yes	Open	680k	Yes
±1.5A	Yes					

Do not populate any component not specified in the table

Title:
Rev:
Contributors: ${CONTRIBUTOR}
Sheet: /power_switching/
Id: 2/2