University of California Irvine

EECS 112: Organization of Digital Computers (Spring 2022)

Midterm Exercises

1. Compilers can have a profound impact on the performance of an application. Assume that for a program, compiler A results in a dynamic instruction count of 1.0E9 and has an execution time of 1.1 s, while compiler B results in a dynamic instruction count of 1.2E9 and an execution time of 1.5 s.

   (a) Find the average CPI for each program given that the processor has a clock cycle time of 1 ns.

   (b) Assume the compiled programs run on two different processors. If the execution times on the two processors are the same, how much faster is the clock of the processor running compiler A's code versus the clock of the processor running compiler B's code?

   (c) A new compiler is developed that uses only 6.0E8 instructions and has an average CPI of 1.1. What is the speedup of using this new compiler versus using compiler A or B on the original processor?

2. Consider a computer running a program that requires 250 s, with 70 s spent executing FP instructions, 85 s executed L/S instructions, and 40 s spent executing branch instructions. Assume the program only uses FP, INT, L/S, and branch instructions.

   (a) By how much is the total time reduced if the time for FP operations is reduced by 20%?

   (b) By how much is the time for INT operations reduced if the total time is reduced by 20%?

   (c) Can the total time can be reduced by 20% by reducing only the time for branch instructions?

3. For the RISC-V assembly instructions below, what is the corresponding C statement? Assume that the variables `f`, `g`, `h`, `i`, and `j` are assigned to registers `x5`, `x6`, `x7`, `x28`, and `x29`, respectively. Assume that the base address of the arrays A and B are in registers `x10` and `x11`, respectively.

```
slli x30, x5, 2     // x30 = f*4
add  x30, x10, x30  // x30 = &A[f]
slli x31, x6, 2     // x31 = g*4
add  x31, x11, x31  // x31 = &B[g]
lw   x5, 0(x30)     // f = A[f]

addi x12, x30, 4
lw   x30, 0(x12)
add  x30, x30, x5
sw   x30, 0(x31)
```

4. For the following C statement, write the corresponding RISC-V assembly code. Assume that the variables `f`, `g`, `h`, `i`, and `j` are assigned to registers `x5`, `x6`, `x7`, `x28`, and `x29`, respectively. Assume that the base address of the arrays A and B are in registers `x10` and `x11`, respectively.

```
B[8] = A[i-j];
```

5. Assume that we would like to make two changes, (1) expand the RISC-V register file to 128 registers and (2) expand the instruction set to contain four times as many instructions.

   (a) How would this affect the size of each of the bit fields in the R-type instructions?

   (b) How would this affect the size of each of the bit fields in the I-type instructions?

   (c) How could each of the two proposed changes decrease the size of a RISC-V assembly program? On the other hand, how could the proposed change increase the size of an RISC-V assembly program?

6. Write the RISC-V assembly code to implement the following C code as an atomic "set max" operation using the `lr.w/sc.w` instructions. Here, the argument `shvar` contains the address of a shared variable which should be replaced by `x` if `x` is greater than the shared variable. Assume that variable `shvar`, `x` are assigned to registers `x10`, `x11`, respectively.

```
void setmax(int* shvar, int x) {
  // Begin critical section
  if (x > *shvar)
    *shvar = x;
  // End critical section
}
```

   Explain what happens when two processors begin to execute this critical section at the same time, assuming that each processor executes exactly one instruction per cycle.

7. Consider the following instruction mix:

R-Type	I-Type (non-lw)	Load	Store	Branch	Jump
24%	28%	25%	10%	11%	2%

   (a) What fraction of all instructions use data memory?

   (b) What fraction of all instructions use instruction memory?

   (c) What fraction of all instructions use the sign extend unit?

   (d) What is the sign extend unit doing during cycles in which its output is not needed?

8. When silicon chips are fabricated, defects in materials (e.g., silicon) and manufacturing errors can result in defective circuits. A very common defect is for one signal wire to get "broken" and always register a logical 0. This is often called a "stuck-at-0" fault.

   (a) Which instructions fail to operate correctly if the `MemToReg` wire is stuck at 0?

   (b) Which instructions fail to operate correctly if the `ALUSrc` wire is stuck at 0?

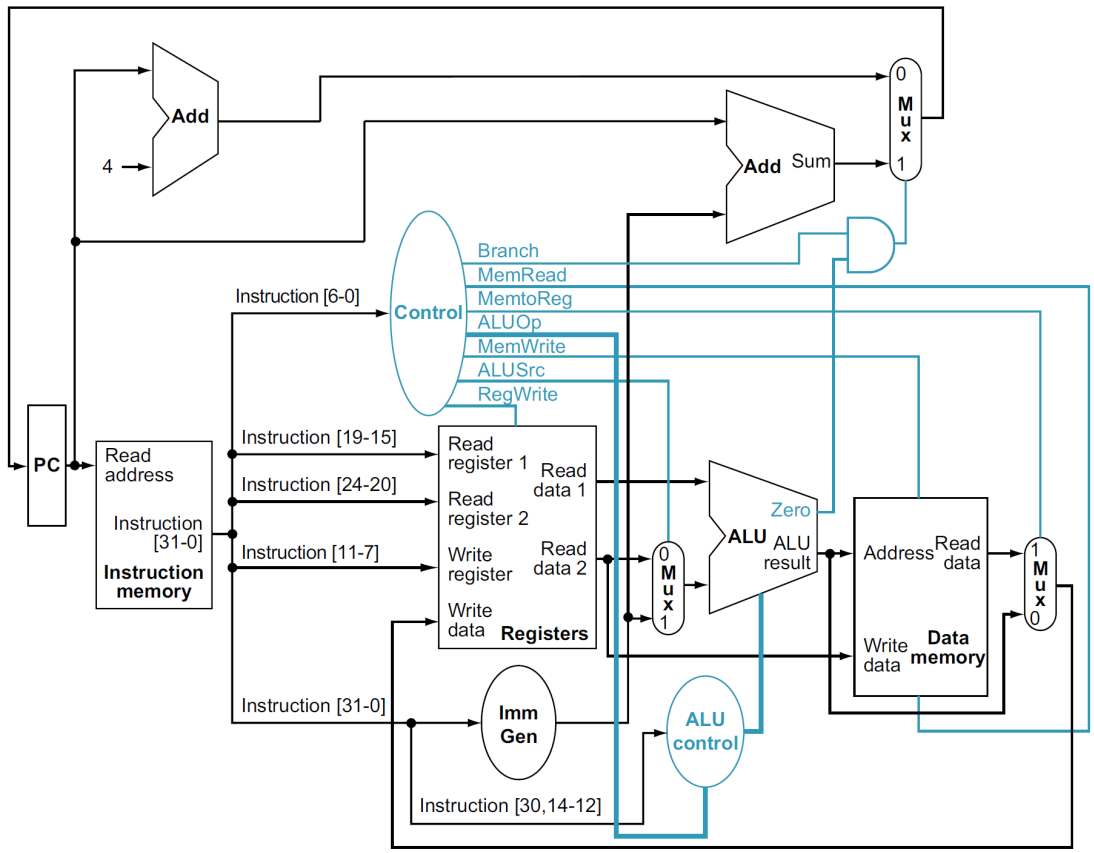

9. Assume we would like to support a new `swap` instruction:

```
swap rs1, rs2
```

which exchanges the values of two registers, `rs1` and `rs2`.

(a) Which new functional blocks (if any) do we need for this instruction?

(b) Which existing functional blocks (if any) require modification?

(c) What new data paths do we need (if any) to support this instruction?

(d) What new signals do we need (if any) from the control unit to support this instruction?

10. Assume that `x11` is initialized to 11 and `x12` is initialized to 22. Suppose you executed the code below on a version of the pipelined datapath that does not handle data hazards (i.e., the programmer is responsible for addressing data hazards by inserting `NOP` instructions where necessary). What would the final values of register `x15` be? Assume the register file is written at the beginning of the cycle and read at the end of a cycle. Therefore, an ID stage will return the results of a WB state occurring during the same cycle.

```
addi x11, x12, 5
add  x13, x11, x12
addi x14, x11, 15
add  x15, x11, x11
```