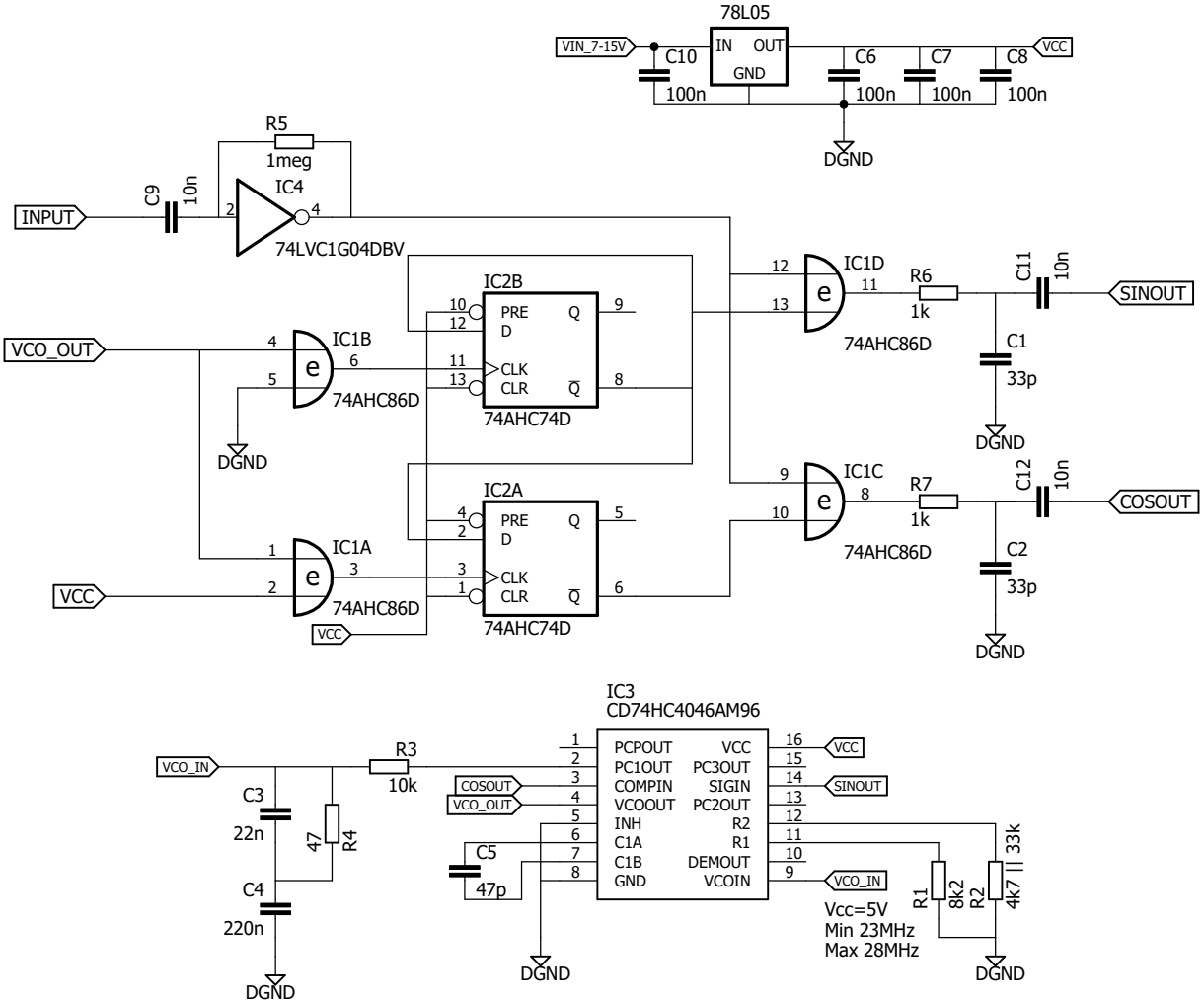
78L05
VIN_7-15V
IN
OUT
GND
C10
100n
C6
100n
C7
100n
C8
100n
VCC
DGND
R5
1meg
IC4
74LVC1G04DBV
INPUT
C9
10n
IC2B
PRE
D
Q
CLK
CLR
Q̄
74AHC74D
VCO_OUT
IC1B
74AHC86D
DGND
IC2A
74AHC74D
IC1A
74AHC86D
VCC
IC1D
74AHC86D
R6
1k
C11
10n
SINOUT
C1
33p
IC1C
74AHC86D
R7
1k
C12
10n
COSOUT
C2
33p
IC3
CD74HC4046AM96
PCPOUT
PC1OUT
COMPIN
VCOOUT
INH
C1A
C1B
GND
VCC
PC3OUT
SIGIN
PC2OUT
R2
R1
DEMOUT
VCOIN
VCO_IN
R3
10k
C3
22n
R4
47
C4
220n
C5
47p
R1
8k2
R2
4k7 || 33k
Vcc=5V
Min 23MHz
Max 28MHz