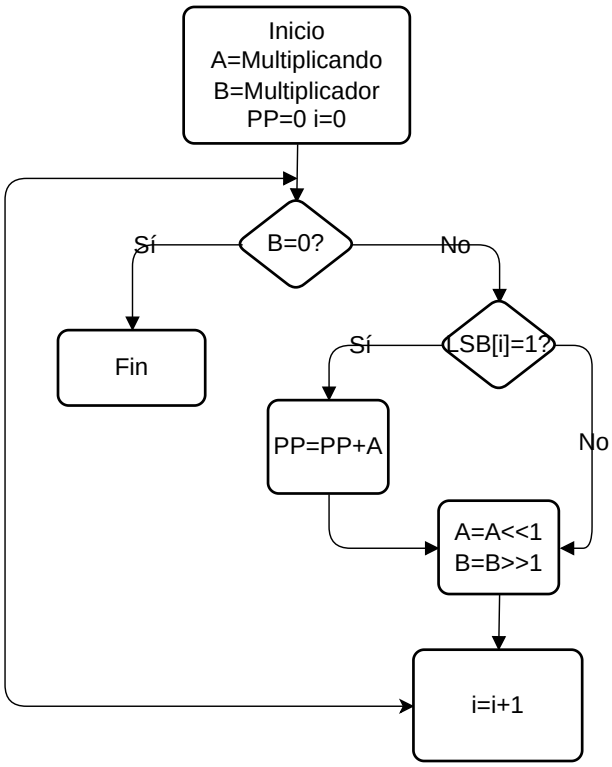
Inicio
A=Multiplicando
B=Multiplicador
PP=0 i=0
B=0?
Sí
No
Fin
LSB[i]=1?
Sí
No
PP=PP+A
A=A<<1
B=B>>1
i=i+1

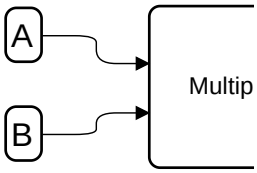
A
B
Multip

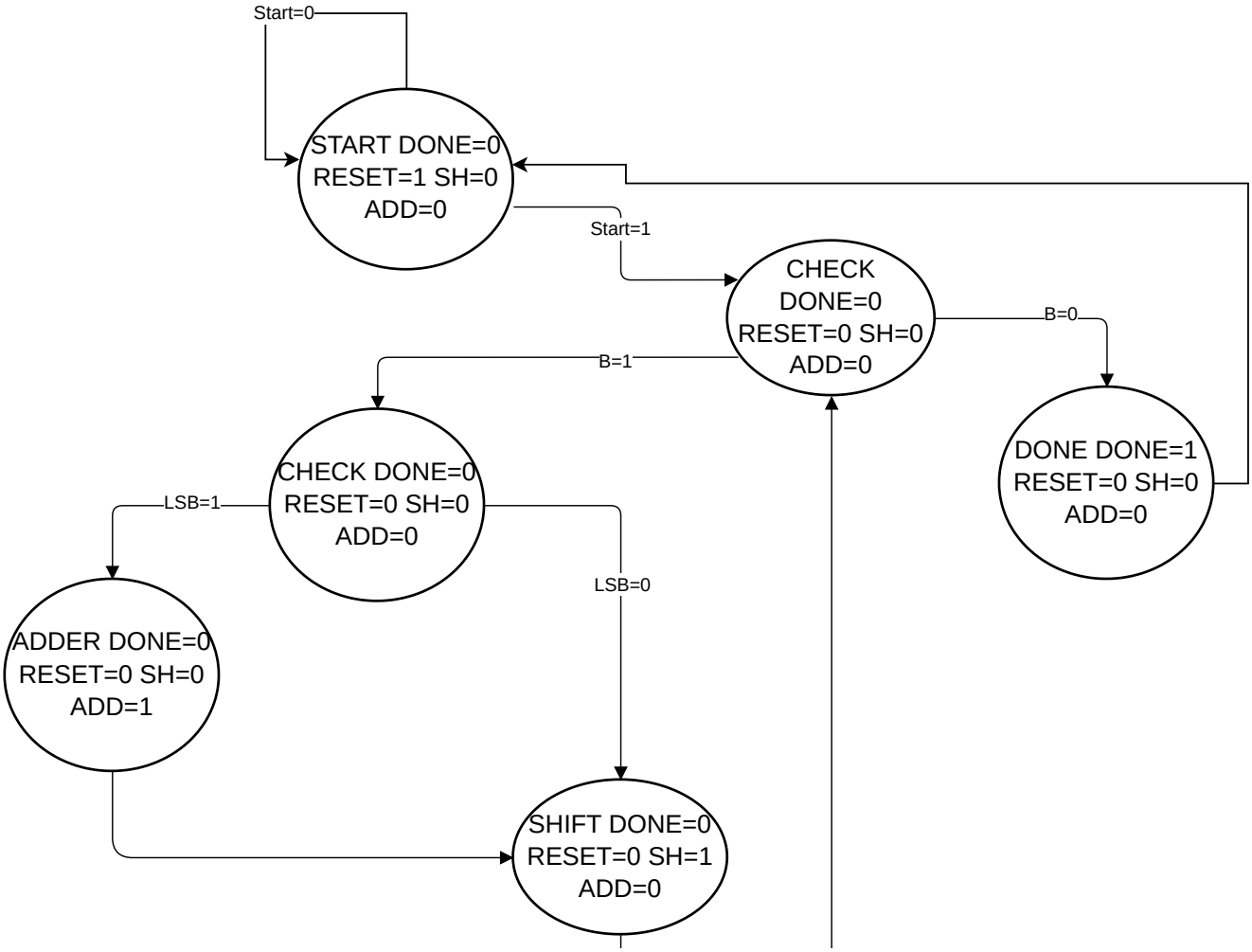
Start=0
START DONE=0
RESET=1 SH=0
ADD=0
Start=1
CHECK
DONE=0
RESET=0 SH=0
ADD=0
B=0
B=1
DONE DONE=1
RESET=0 SH=0
ADD=0
CHECK DONE=0
RESET=0 SH=0
ADD=0
LSB=1
LSB=0
ADDER DONE=0
RESET=0 SH=0
ADD=1
SHIFT DONE=0
RESET=0 SH=1
ADD=0

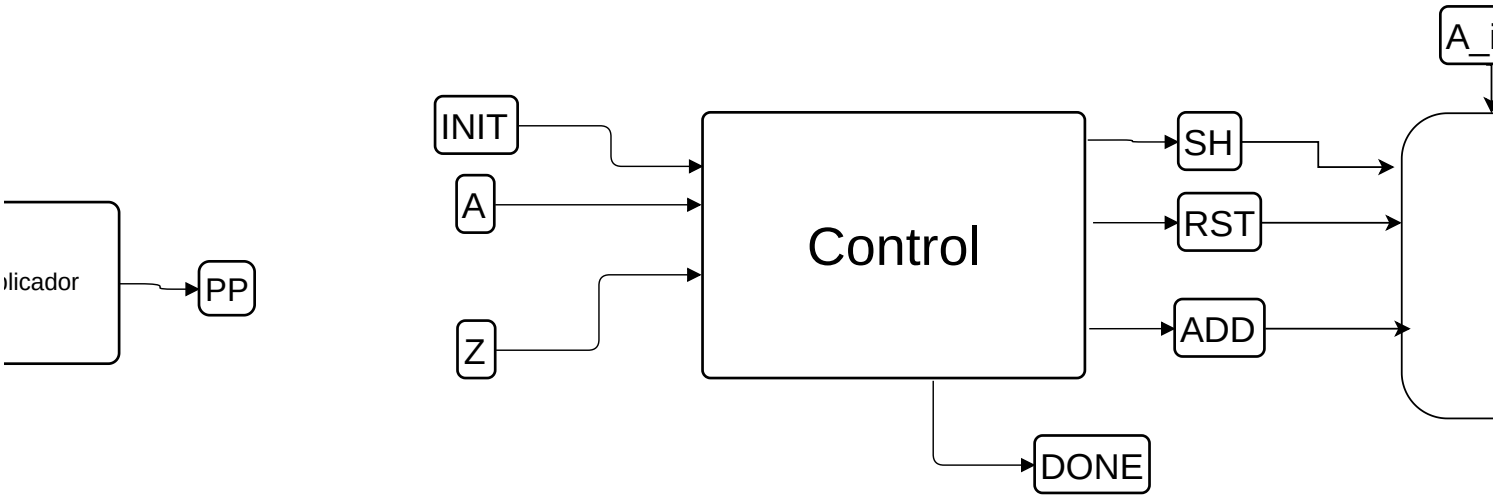
licador
PP
INIT
A
Z
Control
SH
RST
ADD
DONE
A_

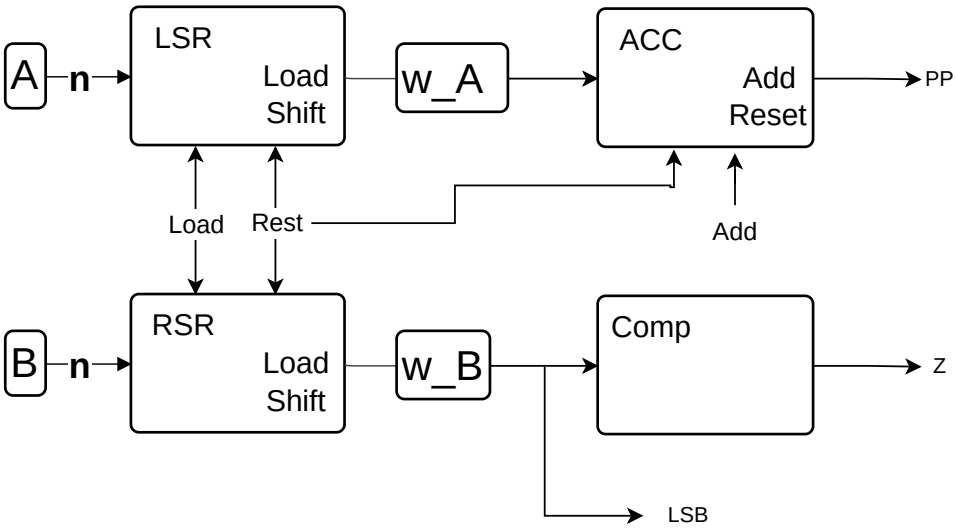
A
n
LSR
Load
Shift
w_A
ACC
Add
Reset
PP
Load
Rest
Add
B
n
RSR
Load
Shift
w_B
Comp
Z
LSB

in
B_in
DATAPATH
PP

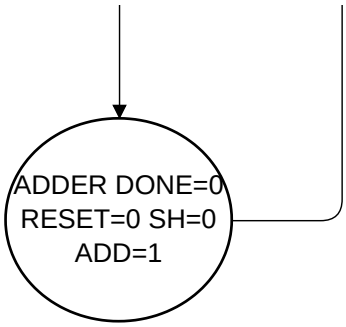
ADDER DONE=0
RESET=0 SH=0
ADD=1