B77 MKII

SET OF SCHEMATICS

BLOCK DIAGRAM / POWER SUPPLY AND TAPE DRIVER CONTROL

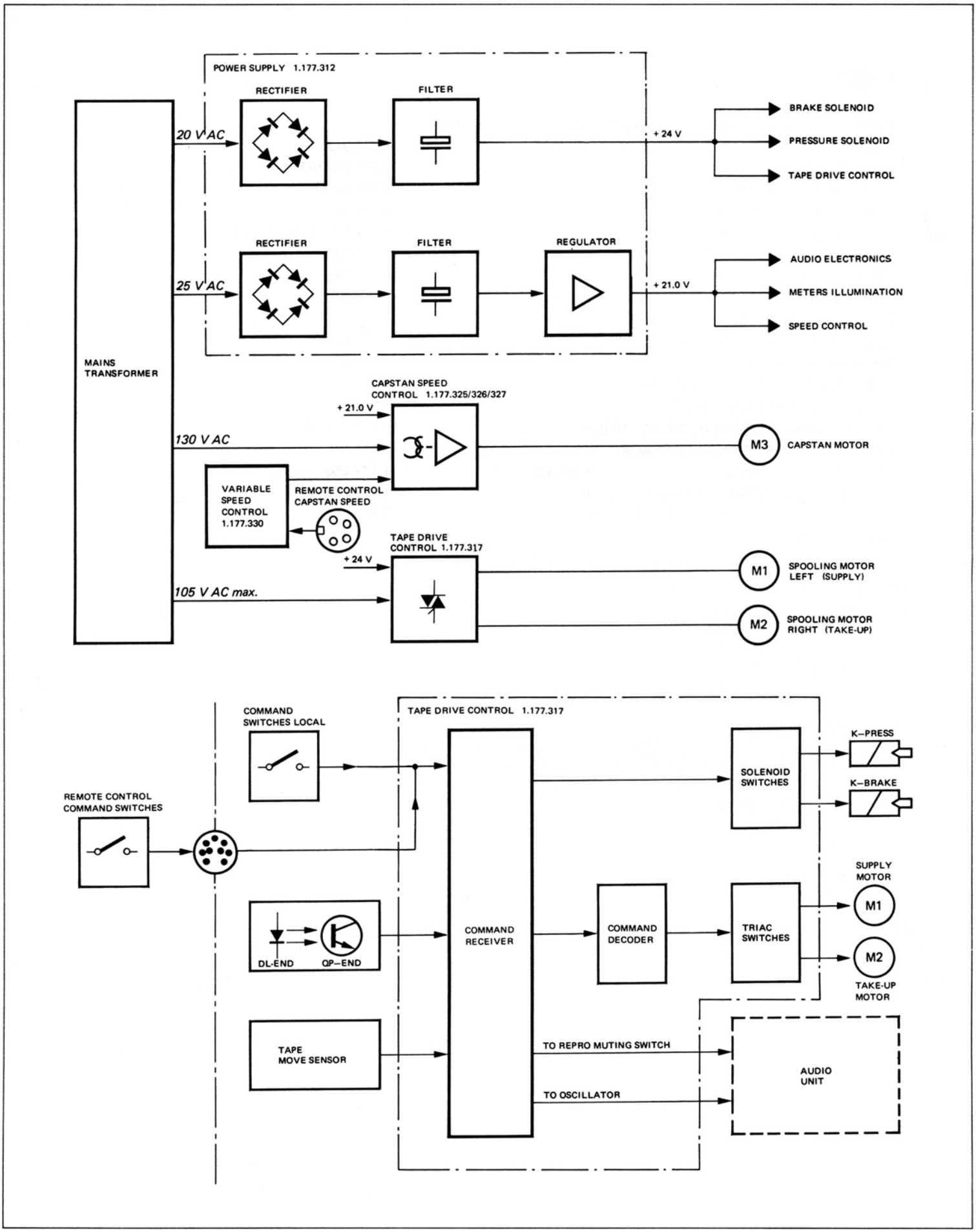

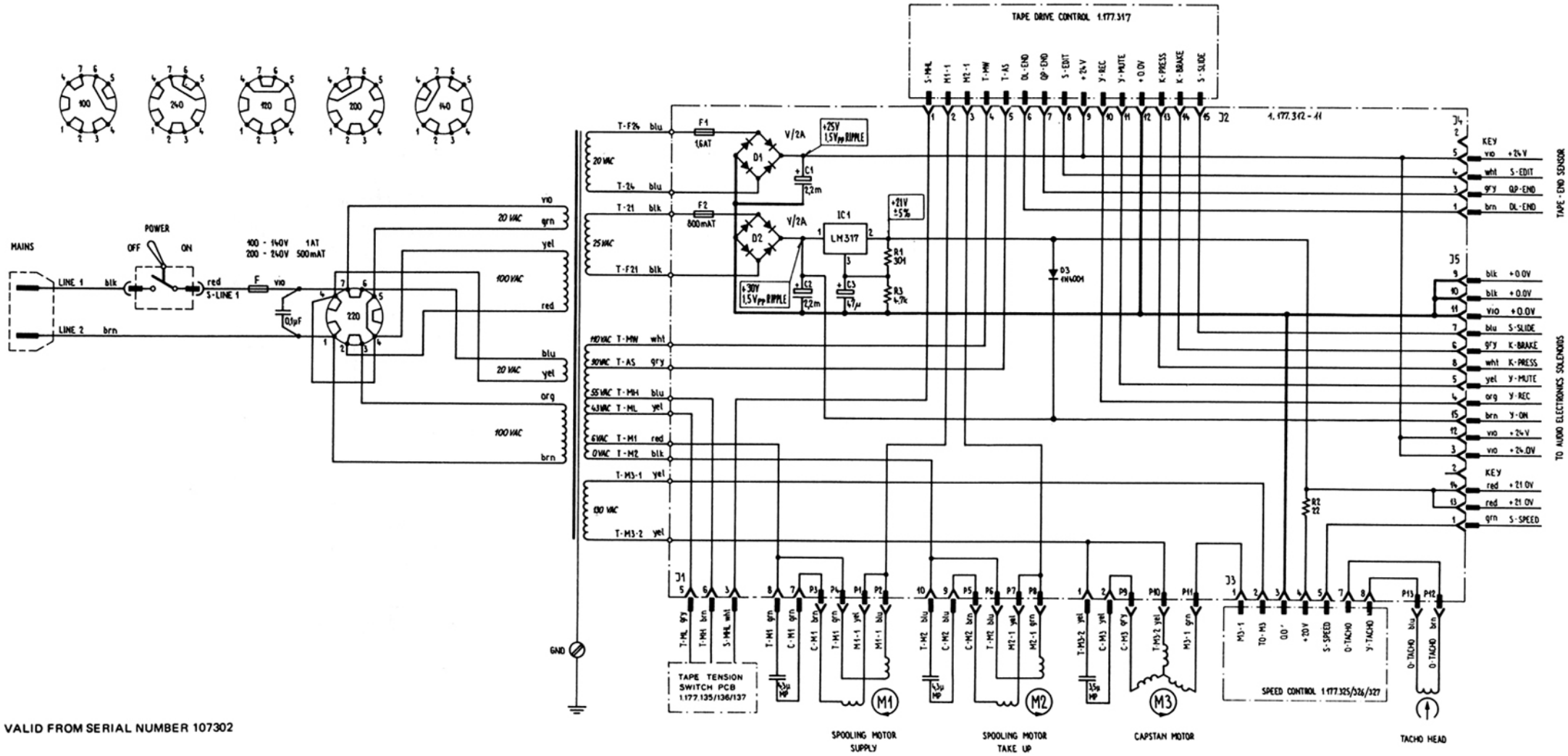

VALID FROM SERIAL NUMBER 107302

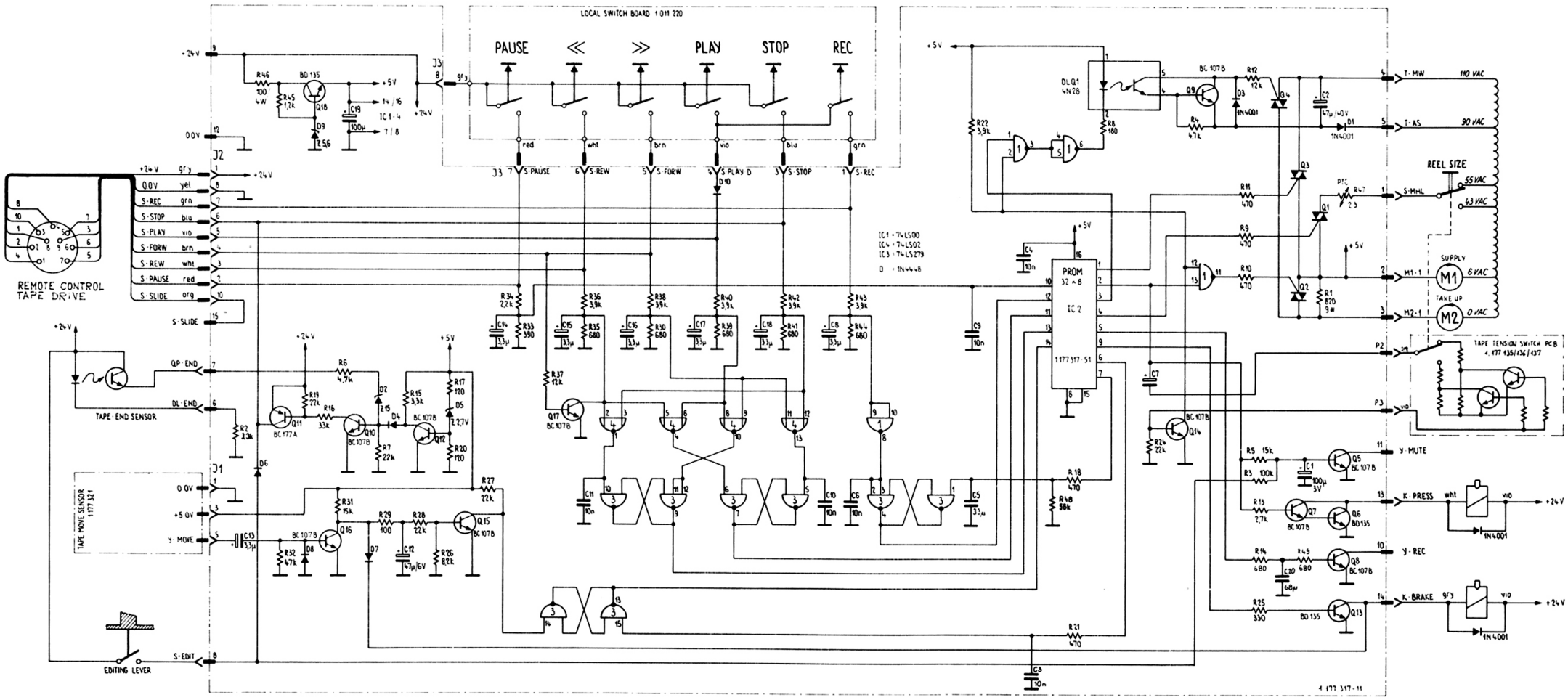
LOCAL SWITCH BOARD 1.011.220
PAUSE
PLAY
STOP
REC
REMOTE CONTROL TAPE DRIVE
TAPE END SENSOR
TAPE MOVE SENSOR 1.177.321
EDITING LEVER
PROM 32 × 8
IC 2
1.177.317-51
IC1 = 74LS00
IC4 = 74LS02
IC3 = 74LS279
D = 1N4448
REEL SIZE
55 VAC
63 VAC
110 VAC
90 VAC
SUPPLY
TAKE UP
6 VAC
0 VAC
TAPE TENSION SWITCH PCB
4.177.135/136/137
4.177.317-11

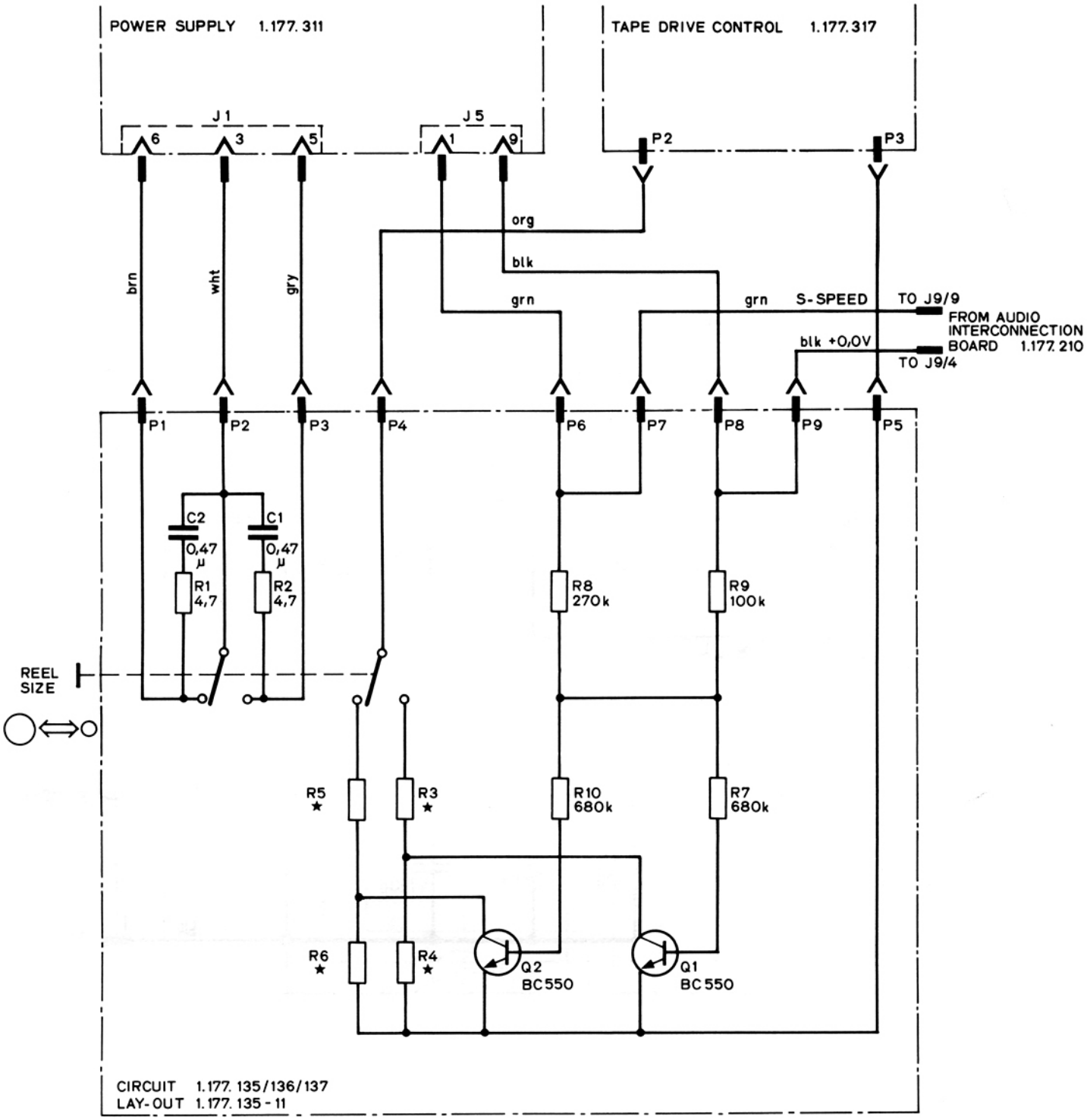

SPEED RANGE	★R3	★R4	★R5	★R6
1.177.135.00 1 7/8 - 3 3/4"	220R	180R	220R	180R
1.177.136.00 3 3/4 - 7 1/2"	220R	470R	3,9k	3,9k
1.177.137.00 7 1/2 - 15 "	1,2k	2,7k	3,9k	3,9k

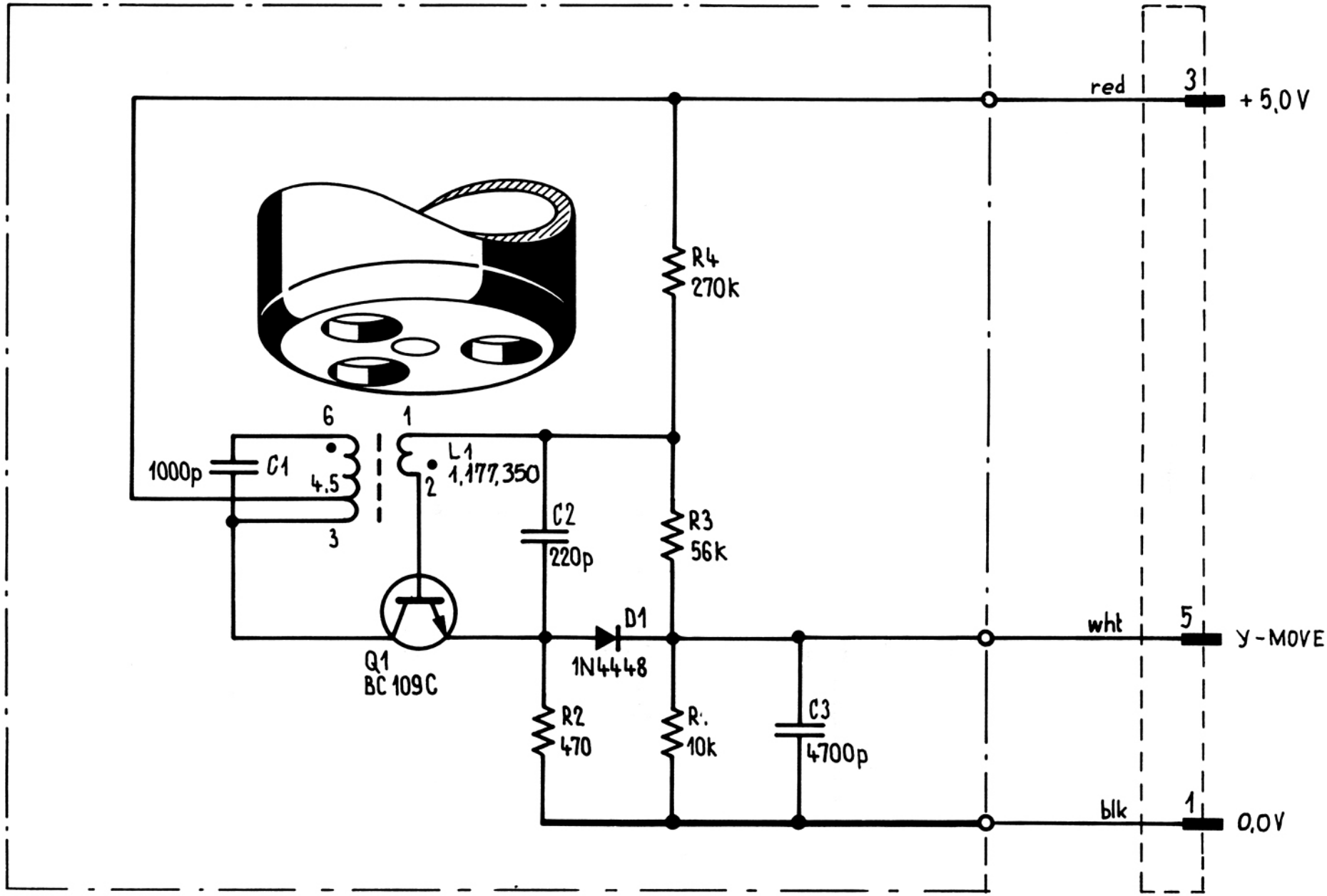
red
3
+5,0V
R4
270k
6
1
1000p
C1
4,5
L1
1,177,350
2
3
C2
220p
R3
56k
D1
1N4448
Q1
BC 109C
wht
5
Y-MOVE
R2
470
R'.
10k
C3
4700p
blk
1
0,0V

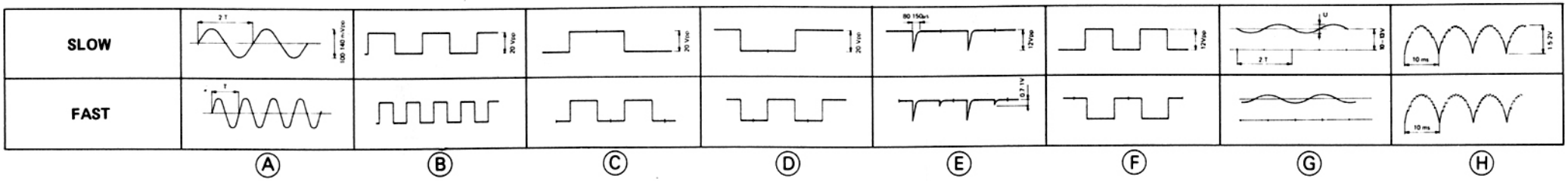

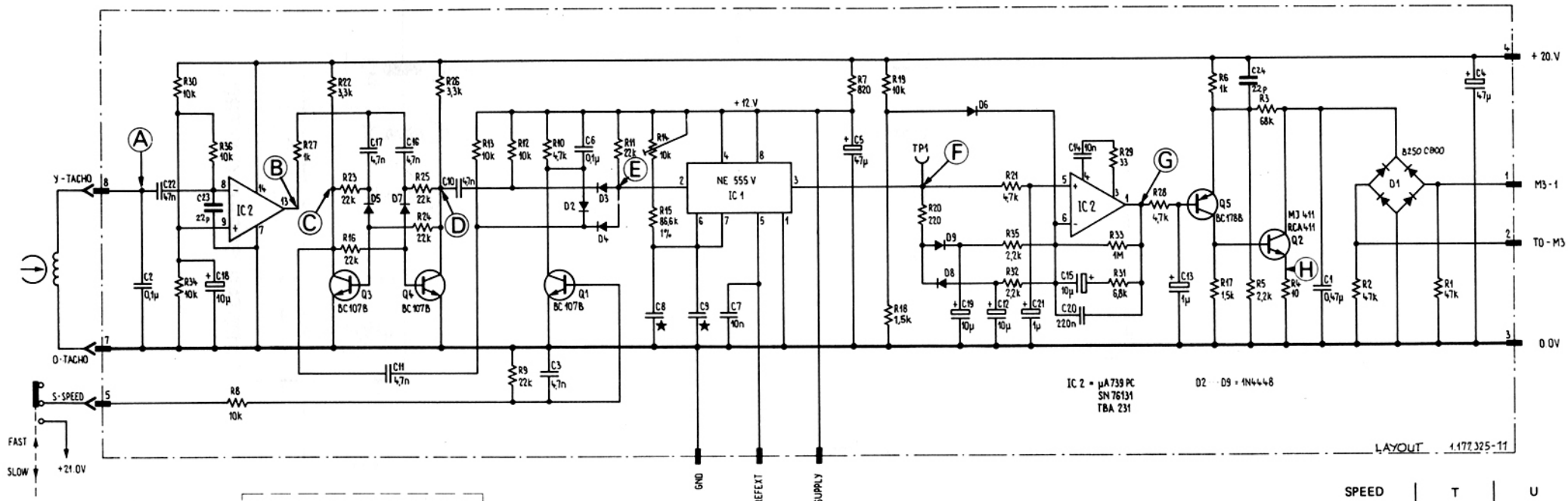

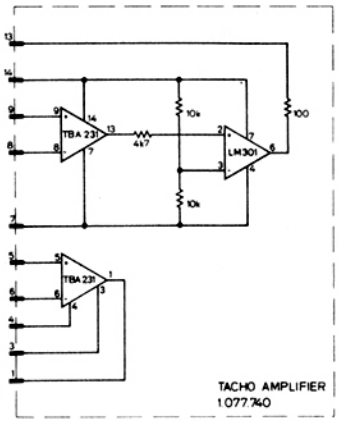

PIN CONFIGURATION:
14-PIN DUAL-IN-LINE

VERSION 1.177.327: INSTEAD OF THE REMOVED IC2 THE SUB-ASSY TACHO APLIFIER 1.077.740 IS PLUGGED INTO THE IC2 SOCKET

SPEED CONTROL	T	U
1.177.325	625 µs	1 Vpp
1.177.326	833 µs	2.5 Vpp
1.177.327	1666 µs	3 Vpp

TYPE	SPEED	CAPSTAN SHAFT ø	C-MOTOR NO.	SPEED CONTROL	C8 ★	C9 ★
HS	7 1/2"–15"	9.06 mm	1.021.320	1.177.325	1.6 nF	4.7 nF
STD	3 3/4"–7 1/2"	4.51 mm	1.021.300	1.177.325	1.6 nF	4.7 nF
LS	1 7/8"–3 3/4"	3.00 mm	1.021.304	1.177.326	1.6 nF	6.8 nF
SLS	15/16"–1 7/8"	3.00 mm	1.021.304	1.177.327	5.6 nF	10 nF

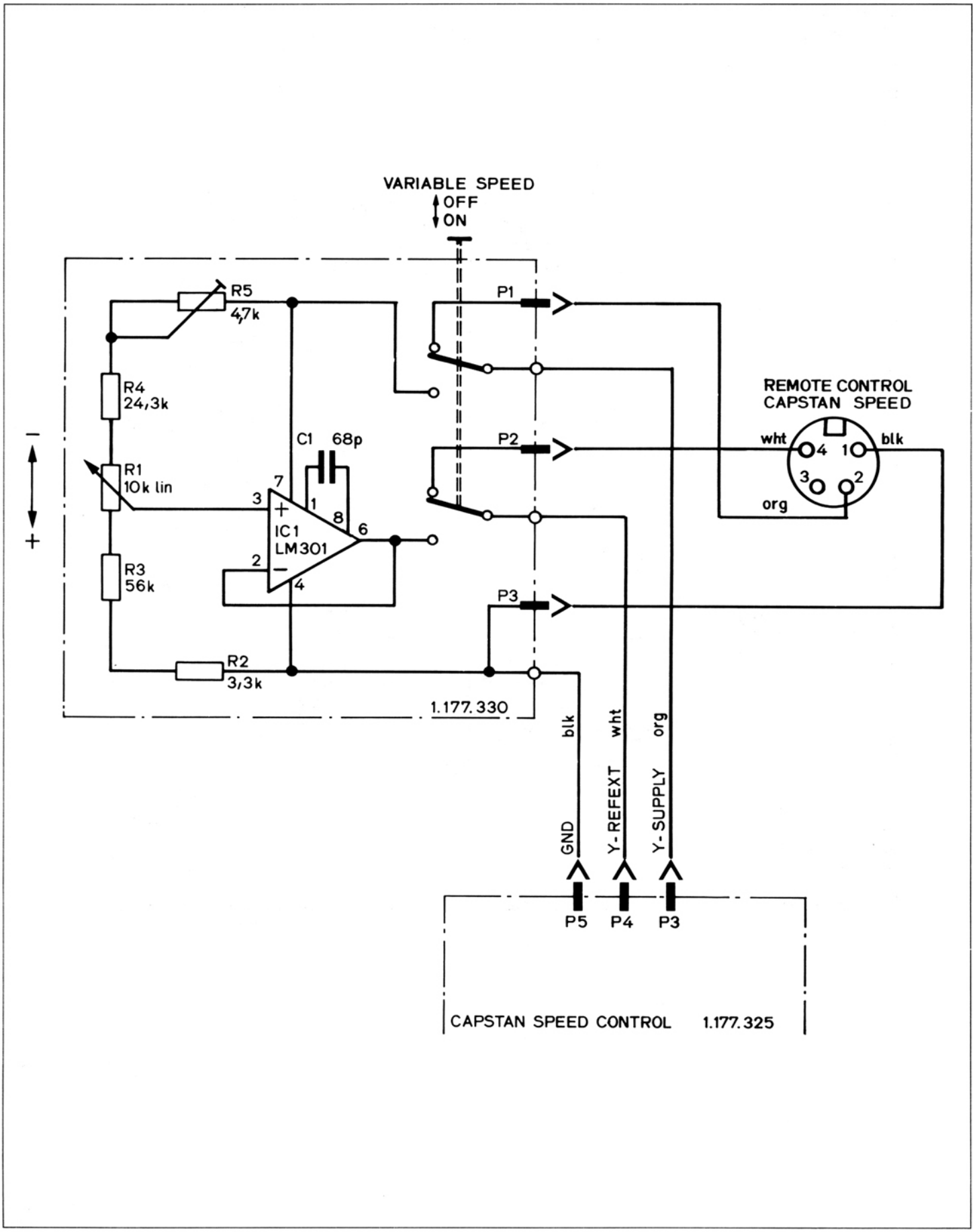
VARIABLE SPEED
OFF
ON
R5
4,7k
R4
24,3k
R1
10k lin
R3
56k
R2
3,3k
C1 68p
IC1
LM301
7
3
1
8
6
2
4
P1
P2
P3
REMOTE CONTROL
CAPSTAN SPEED
wht
blk
org
4
1
3
2
1.177.330
blk
wht
org
GND
Y-REFEXT
Y-SUPPLY
P5
P4
P3
CAPSTAN SPEED CONTROL 1.177.325

VARIABLE SPEED CONTROL 1.128.045

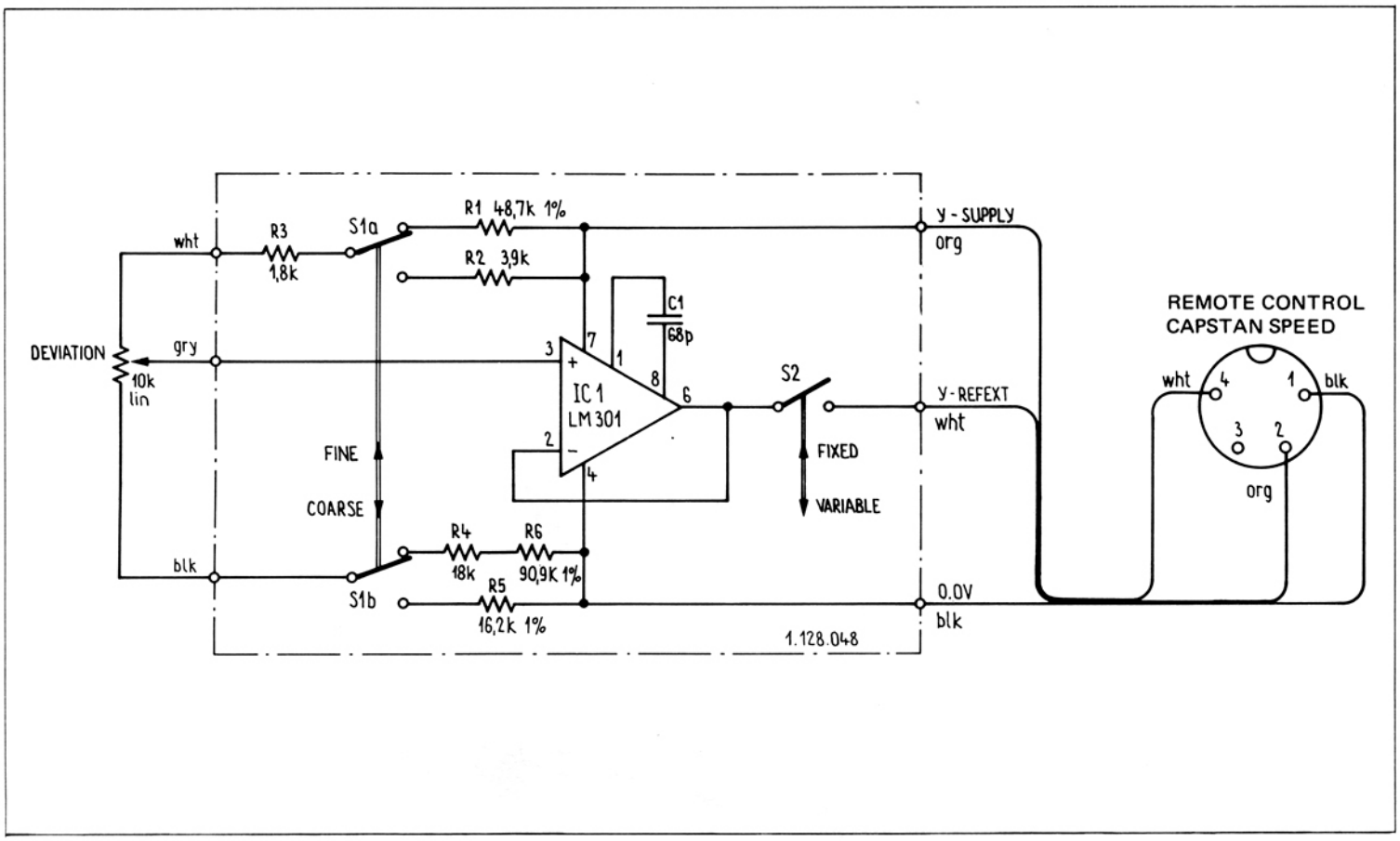

REMOTE COMTROL UNIT / COMMAND SWITCHES 1.128.040

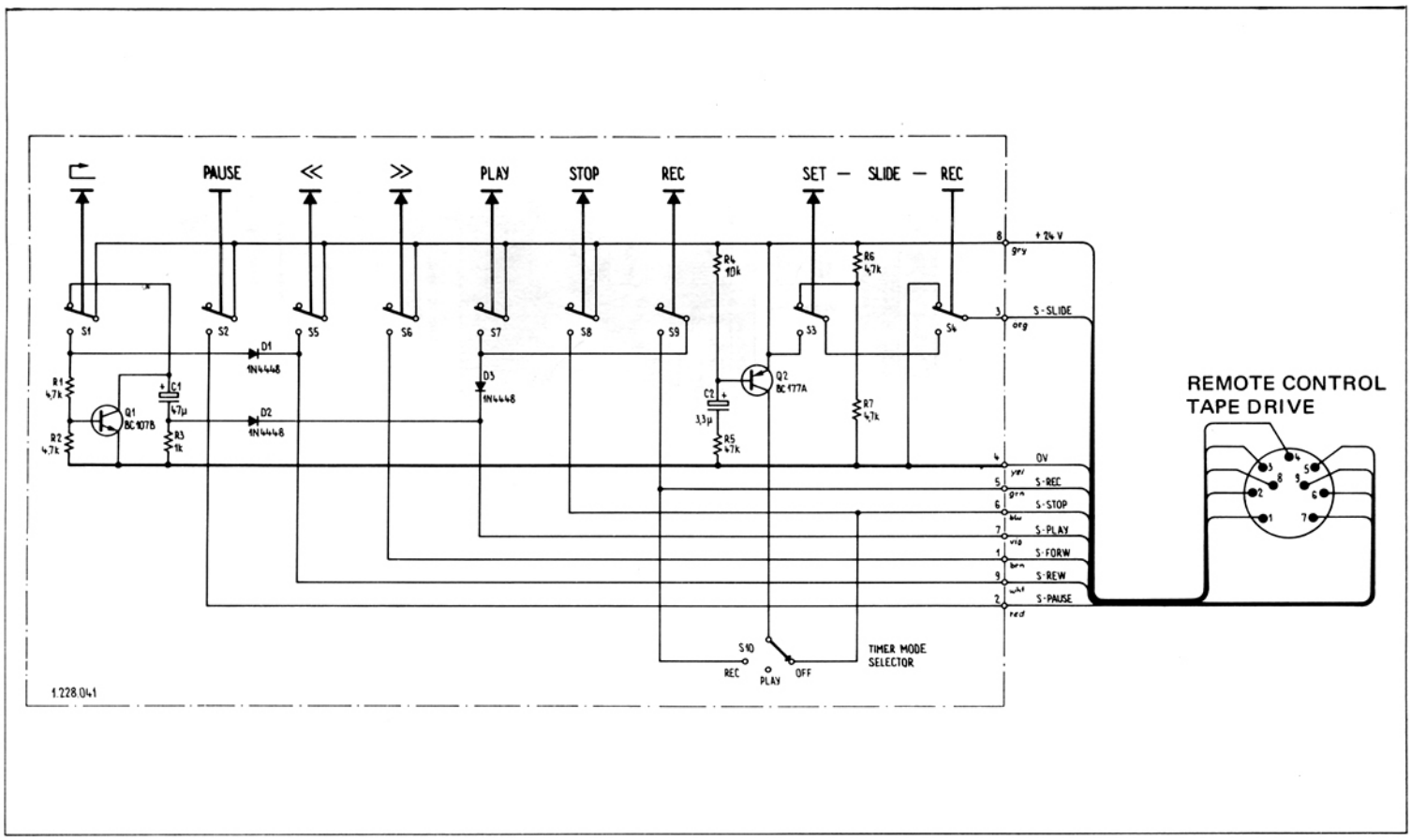

BLOCK DIAGRAM / AUDIO

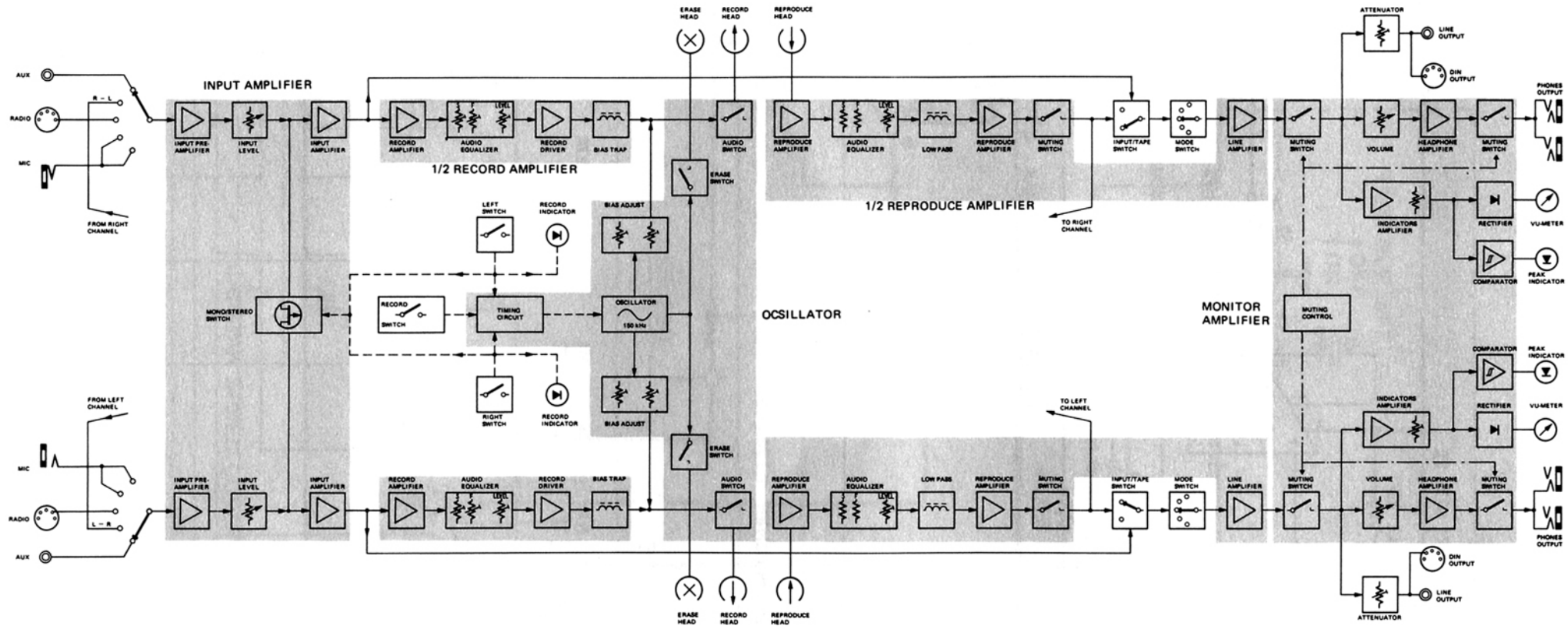

AUDIO INTERCONNECTION PCB 1.177.210

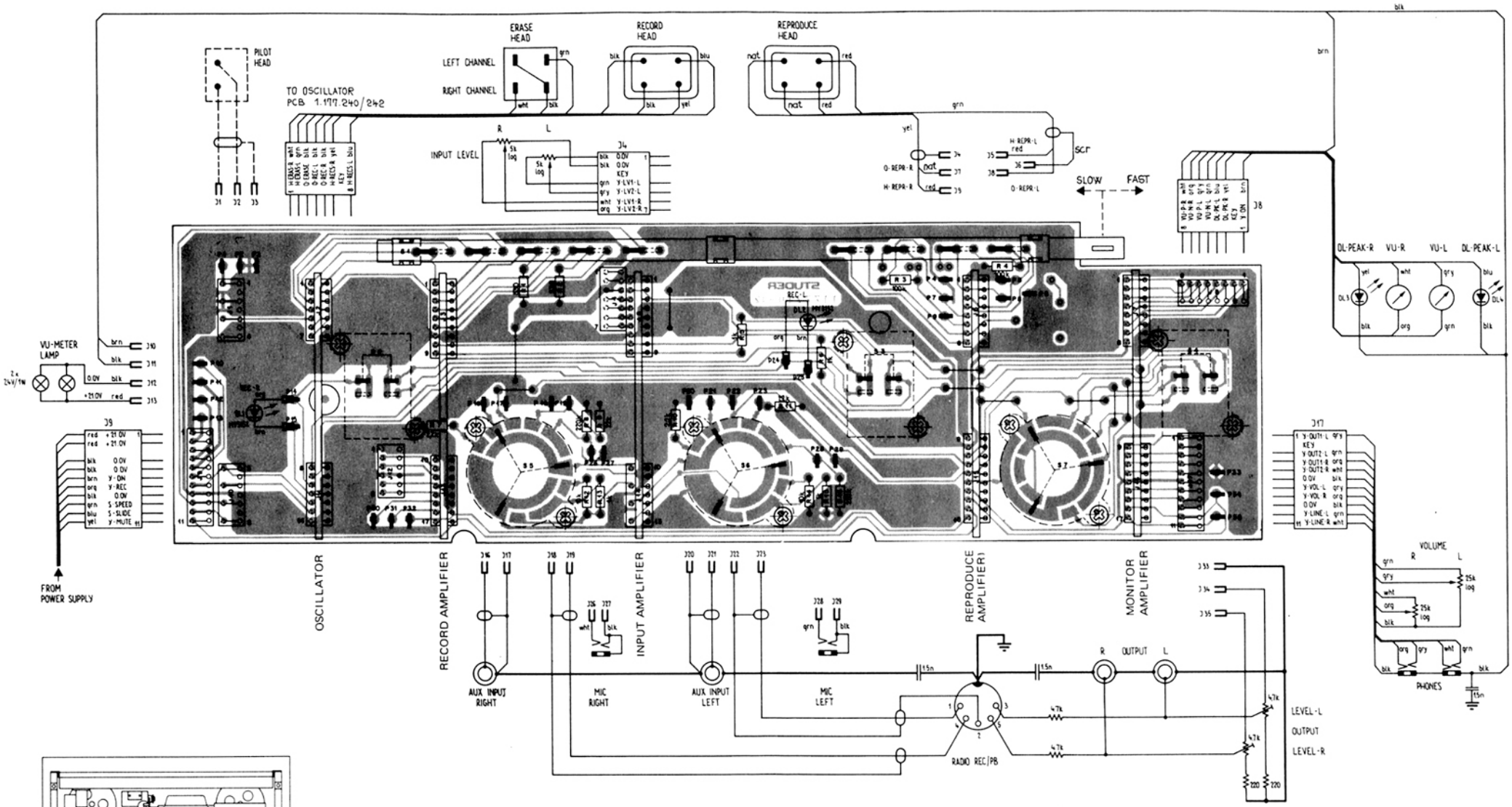

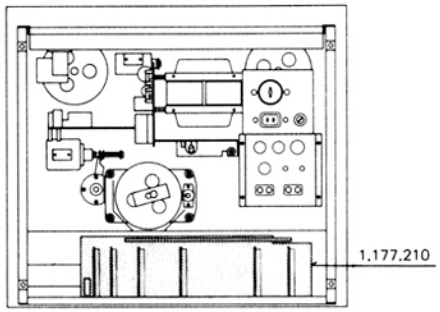

POS NO	PART NO	VALUE	SPECIFICATIONS	EQUIVALENT	MFR
J 01	54.01.0524	4-Pole	CIS-socket-strip		
J 02	54.01.0218	7-Pole	"		
J 03	54.01.0217	9-Pole	"		
J 04	54.01.0263	7-Pole	"		
J 05	54.01.0217	9-Pole	"		
J 06	54.01.0289	8-Pole	"		
J 07	54.01.0289	8-Pole	"		
J 08	54.01.0289	8-Pole	"		
J 09	54.01.0291	11-Pole	"		
J 10	54.01.0524	4-Pole	"		
J 11	54.01.0218	7-Pole	"		
J 12	54.01.0216	6-Pole	"		
J 13	54.01.0289	8-Pole	"		
J 14	54.01.0524	4-Pole	"		
J 15	54.01.0290	10-Pole	"		
J 16	54.01.0217	9-Pole	"		
J 17	54.01.0291	11-Pole	"		
P1-J5	54.02.0320		AMP-Flat pin		
R 01	57.41.4331	330	5% .25W CF		
R 02	57.41.4331	330			
R 03	57.41.4104	100 K			
R 04	57.41.4104	100 K			
R 05	57.41.4102	1 K			
R 06	57.41.4102	1 K			
R 07	57.41.4222	2.2 K			
R 08	57.41.4224	220 K			
R 09	57.41.4223	22 K			
R 10	57.41.4222	2.2 K			
R 11	57.41.4223	22 K			
R 12	57.41.4103	10 K			
R 13	57.41.4102	1 K			
R 14	57.41.4103	10 K			
R 15	57.41.4102	1 K			
R 16	57.41.4224	220 K			
(1) R 17	57.11.4334	330 K			
S 1	1.177.210.01	special	Slide-Switch		
S2-S4	1.011.120.00	2-Pole	Toggle-Switch		
S5-S7	1.011.301.00	5-pos/1-Pole	Rotary-Switch		

CF = Carbon Film

IND	DATE	NAME
	12.6.78	
	10.5.77	Maurer/gv

STUDER Audio-Interconnection Board 1.177.210 PAGE 1 of 1

INPUT AMPLIFIER PCB 1.177.221

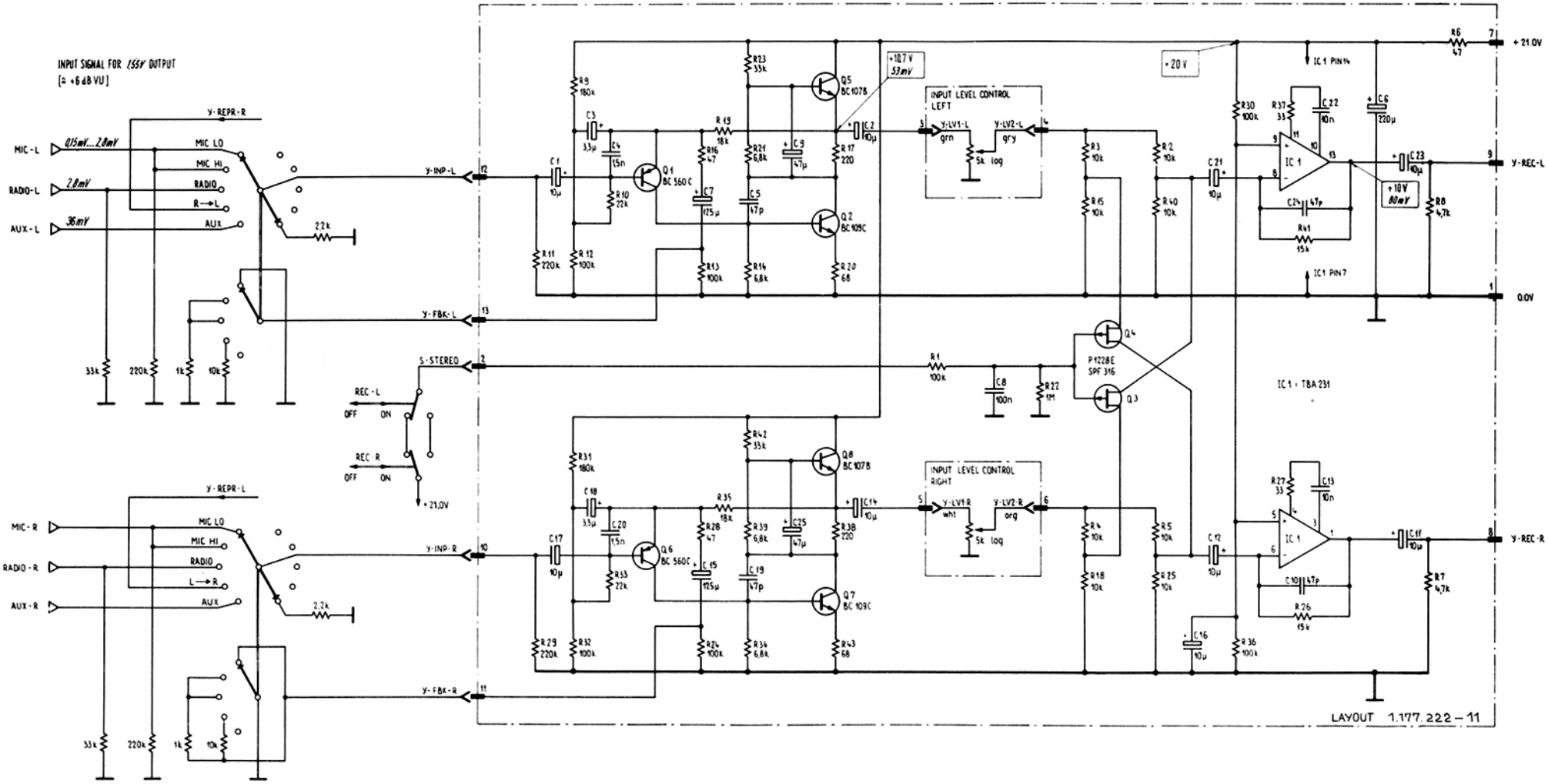

RECORD AMPLIFIER PCB (NAB 3 3/4 - 7 1/2 ips) 1.177.230–81

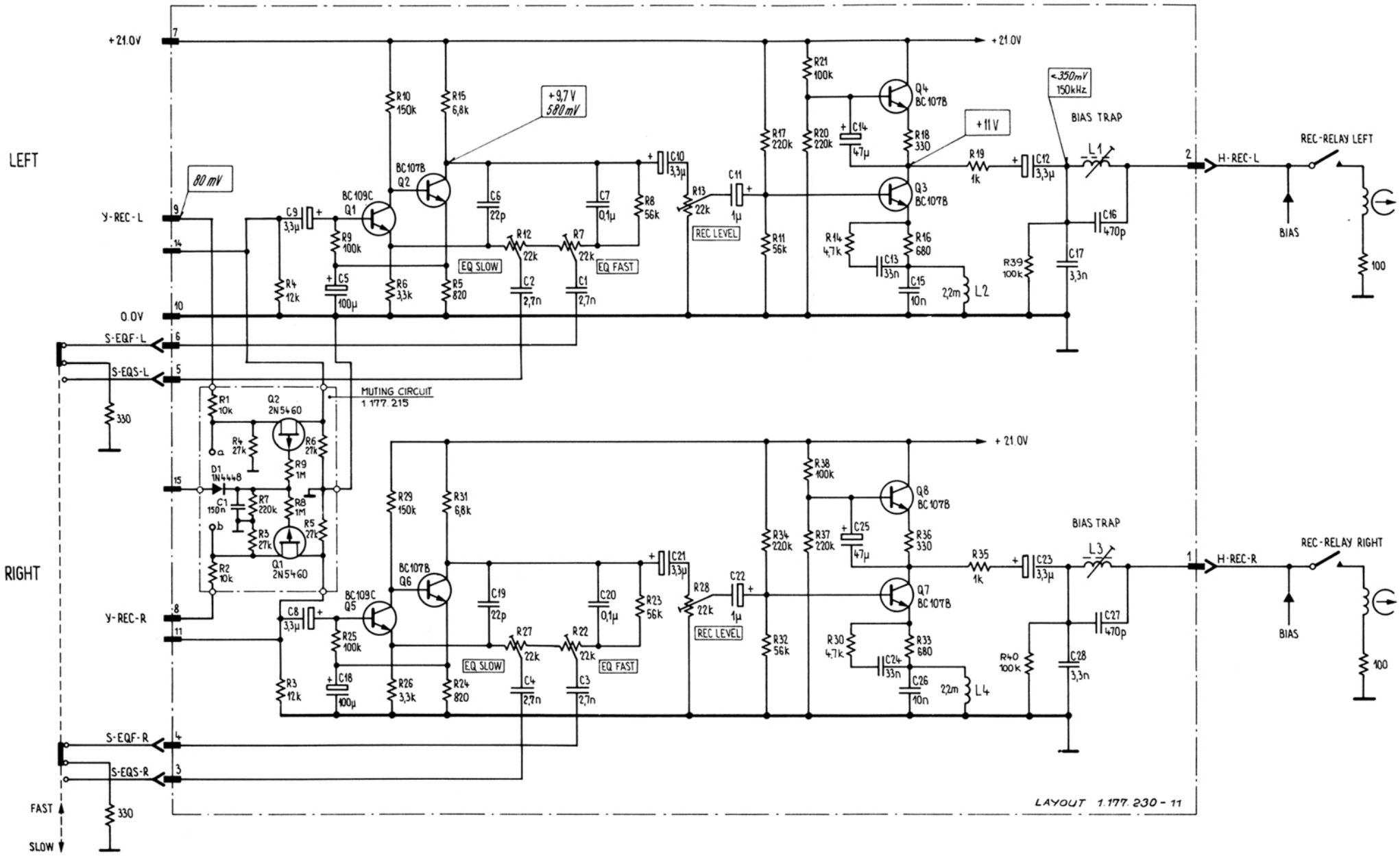

RECORD AMPLIFIER PCB (NAB 7 1/2 - 15 ips) 1.177.232–81

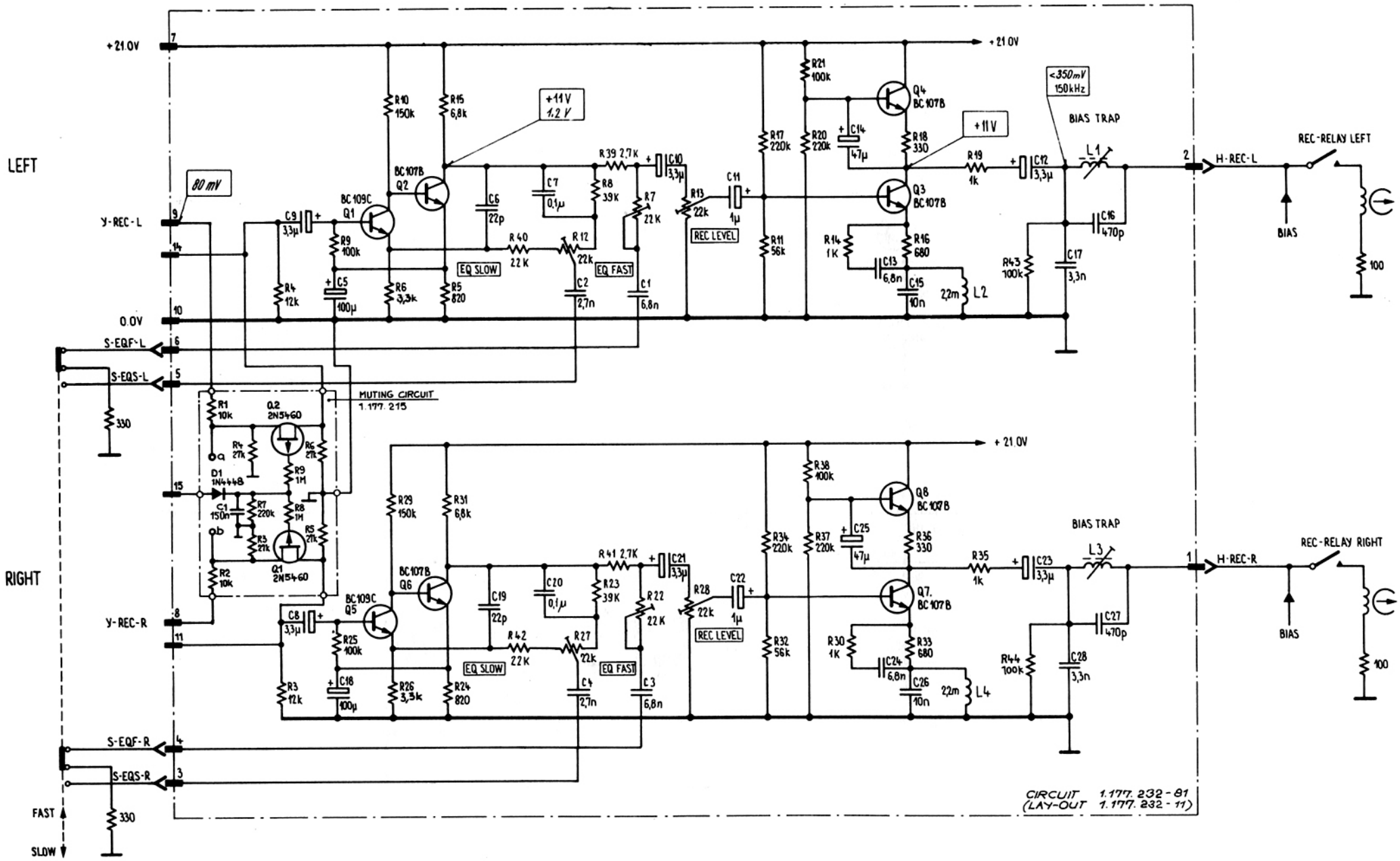

RECORD AMPLIFIER PCB (IEC 7 1/2 - 15 ips) 1.177.233–81

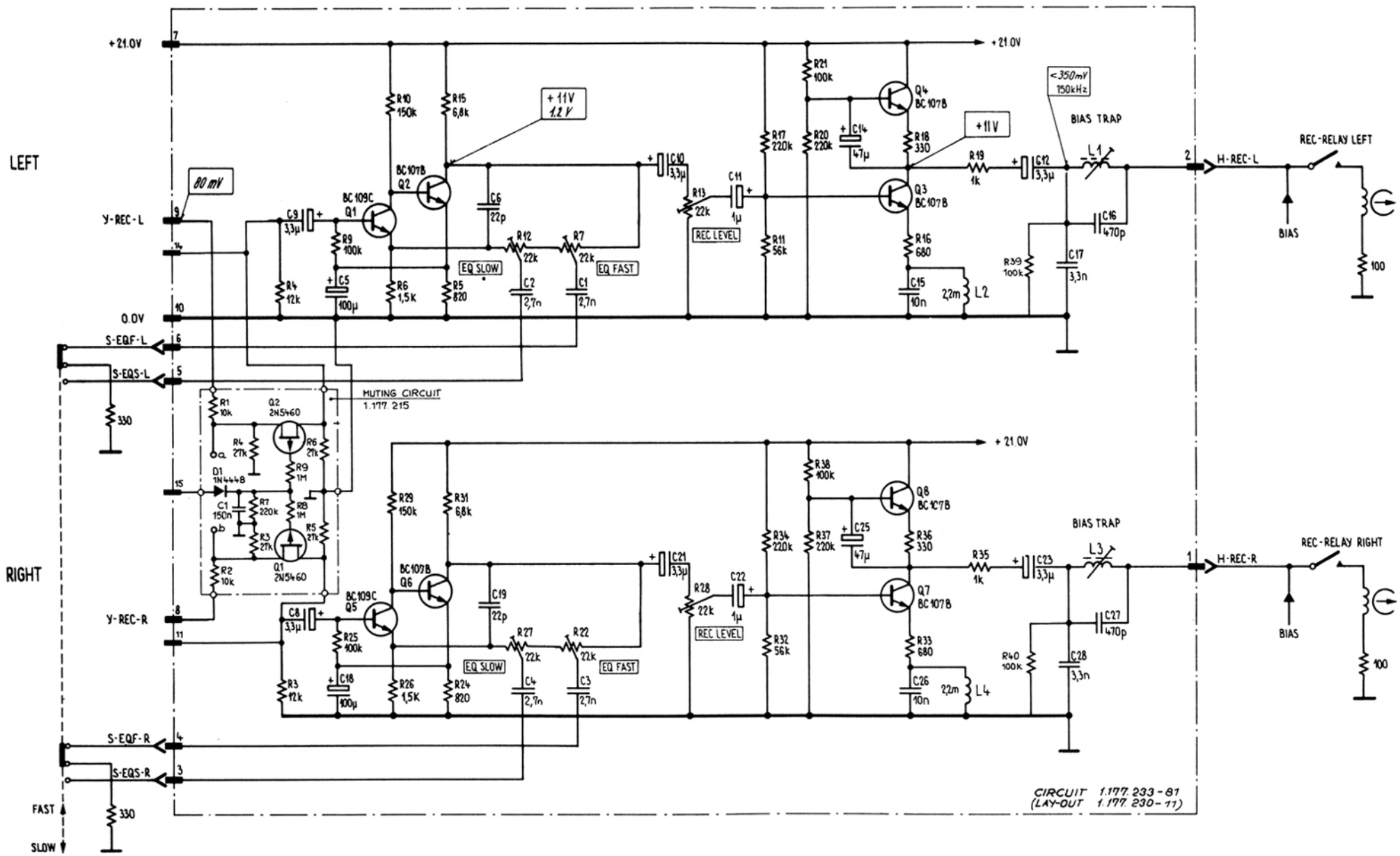

OCSILLATOR PCB 4 TRACK 1.177.240 / 2 TRACK 1.177.243

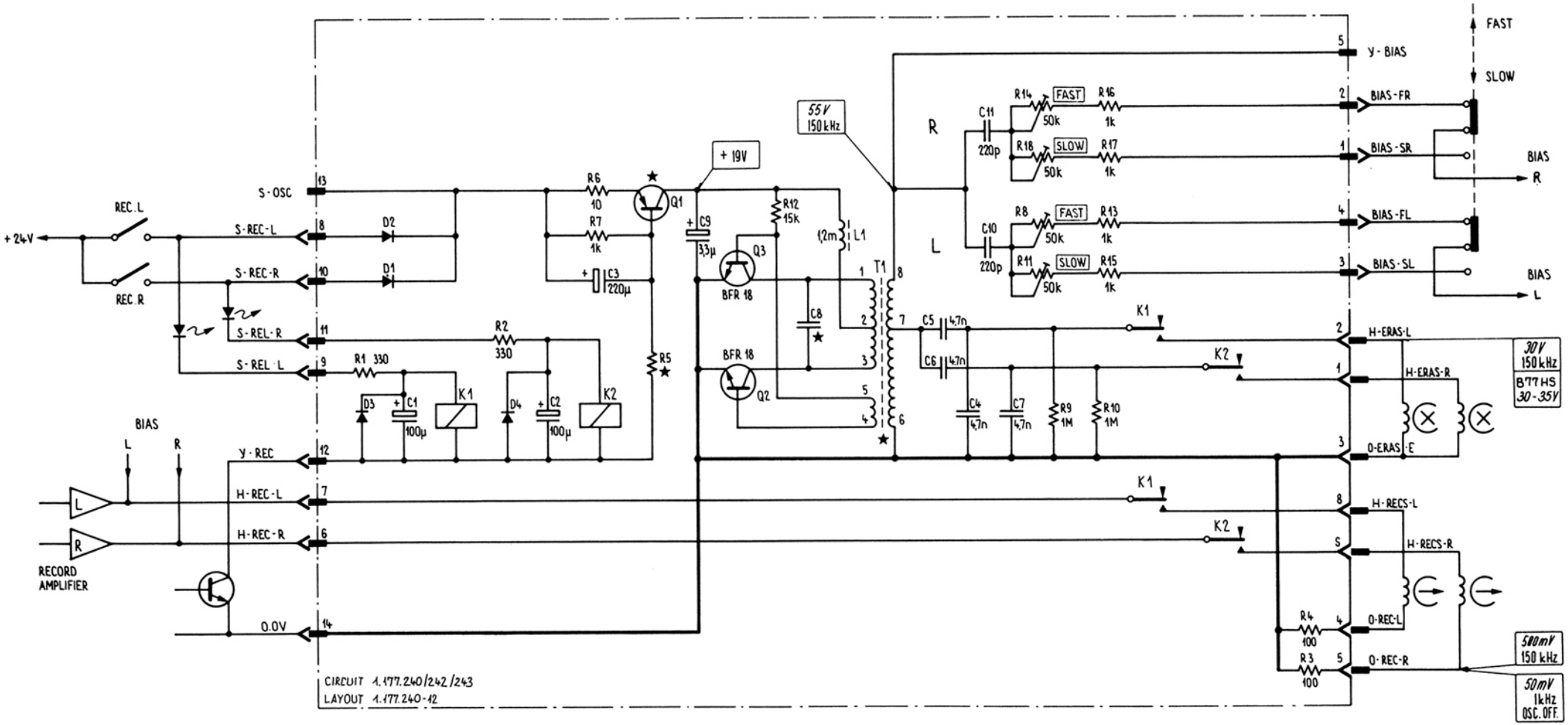

★	T1	Q1	R5	C8
1.177.240	1.022.181-00	BD140	6.8k	6800p
1.177.242	1.022.192-00	BD140	6.8k	8200p
1.177.243	1.022.203-00	BD136-16	5.6k	12n

1.177.242: VALID ONLY FOR EARLIER VERSIONS B77 HS
T1 = 1.022.192.00 C8 = 8200p

REPRODUCE AMPLIFIER PCB (NAB 3 3/4 - 7 1/2 ips) 1.177.250

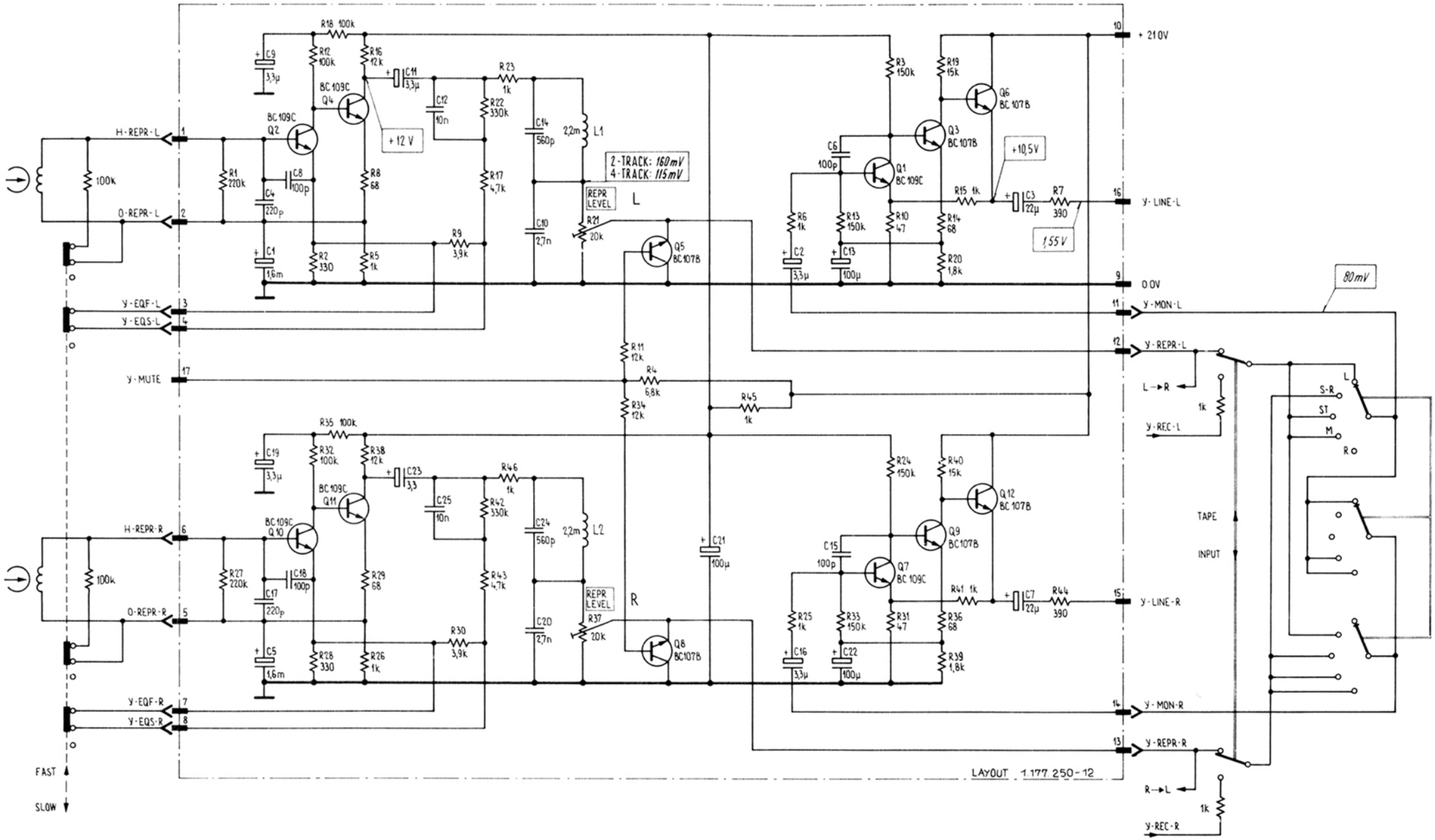

REPRODUCE AMPLIFIER PCB (NAB 7 1/2 - 15 ips) 1.177.252

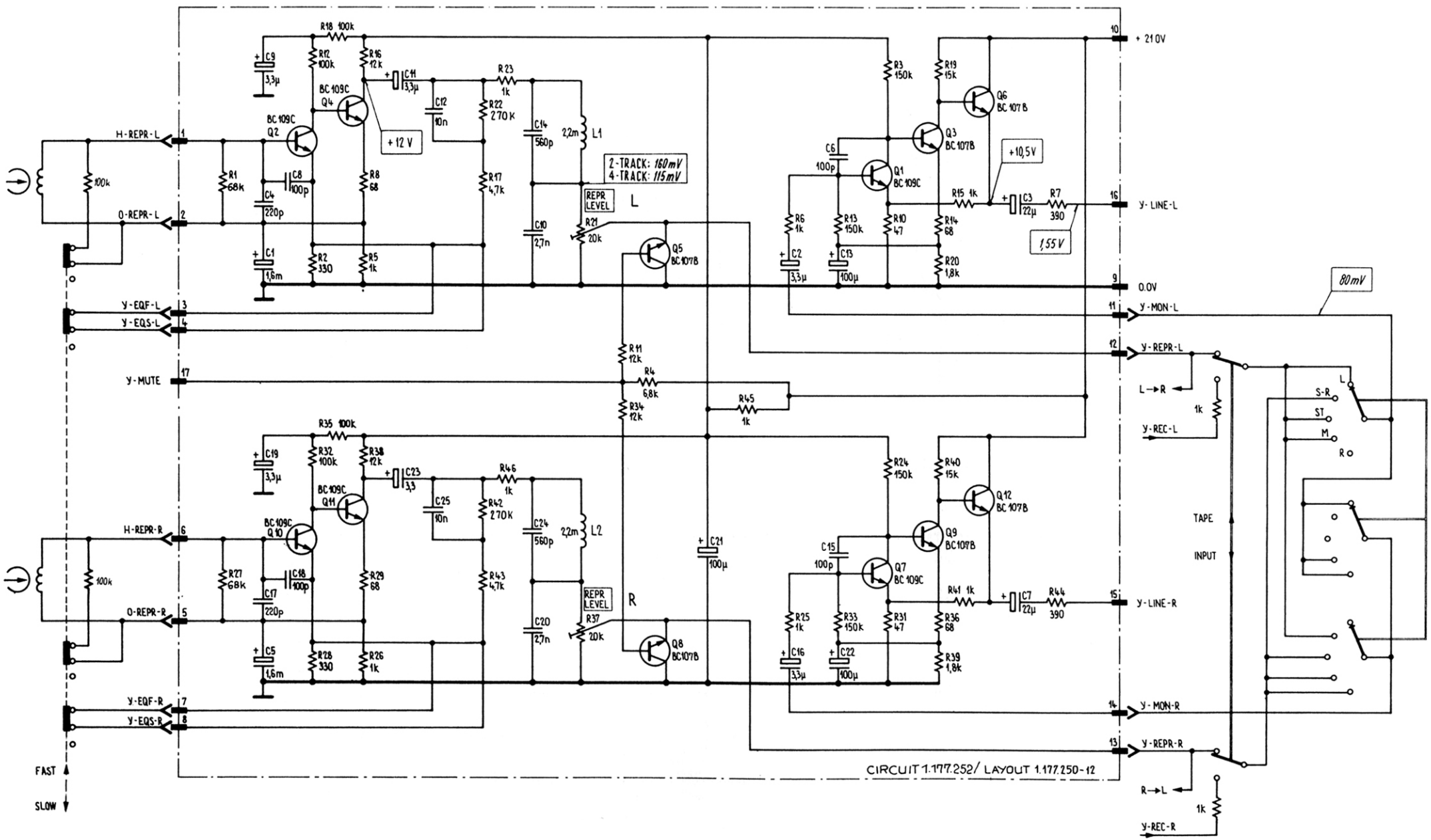

REPRODUCE AMPLIFIER PCB (IEC 7 1/2 - 15 ips) 1.177.253

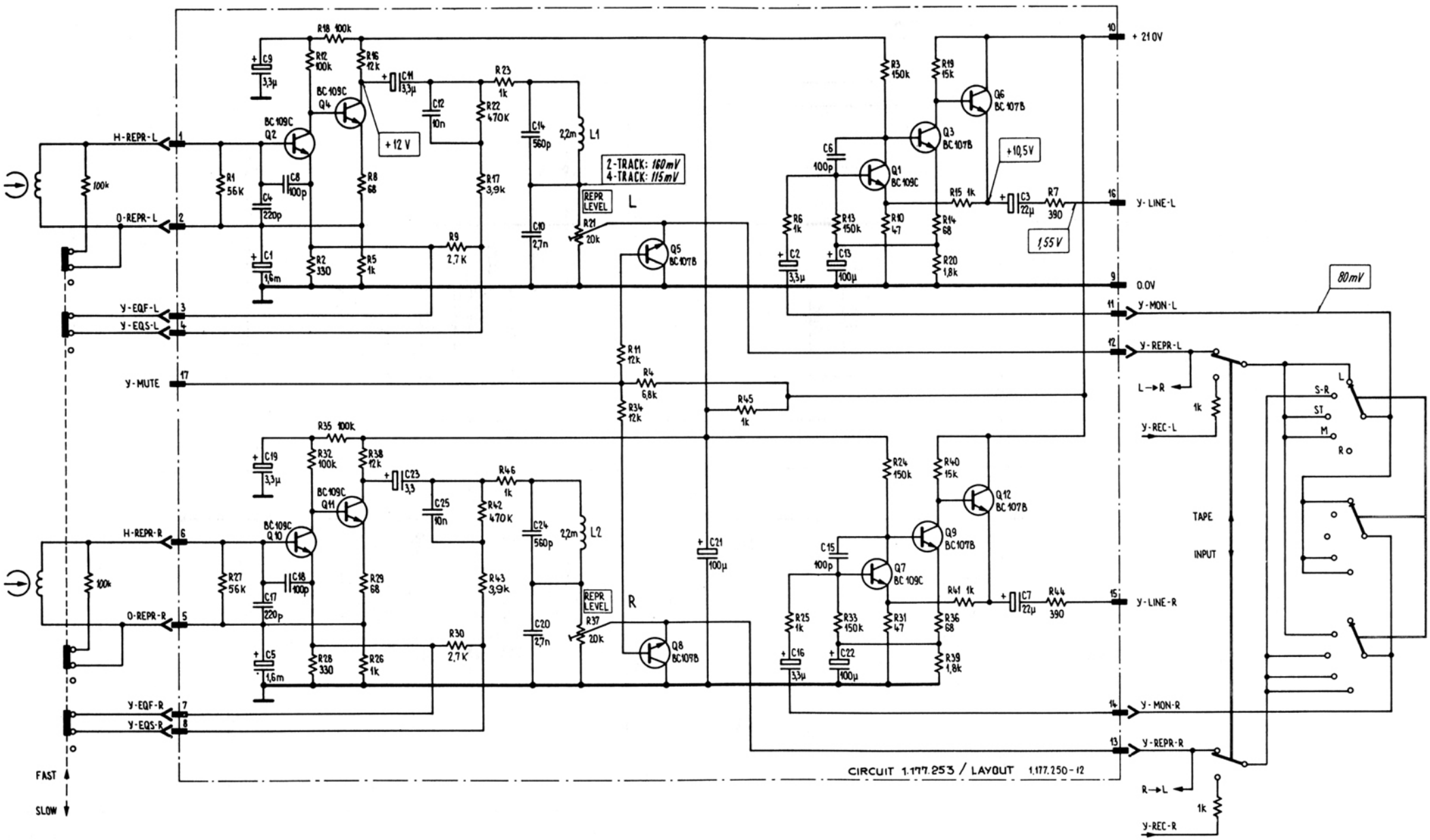

MONITOR AMPLIFIER PCB 1.177.260

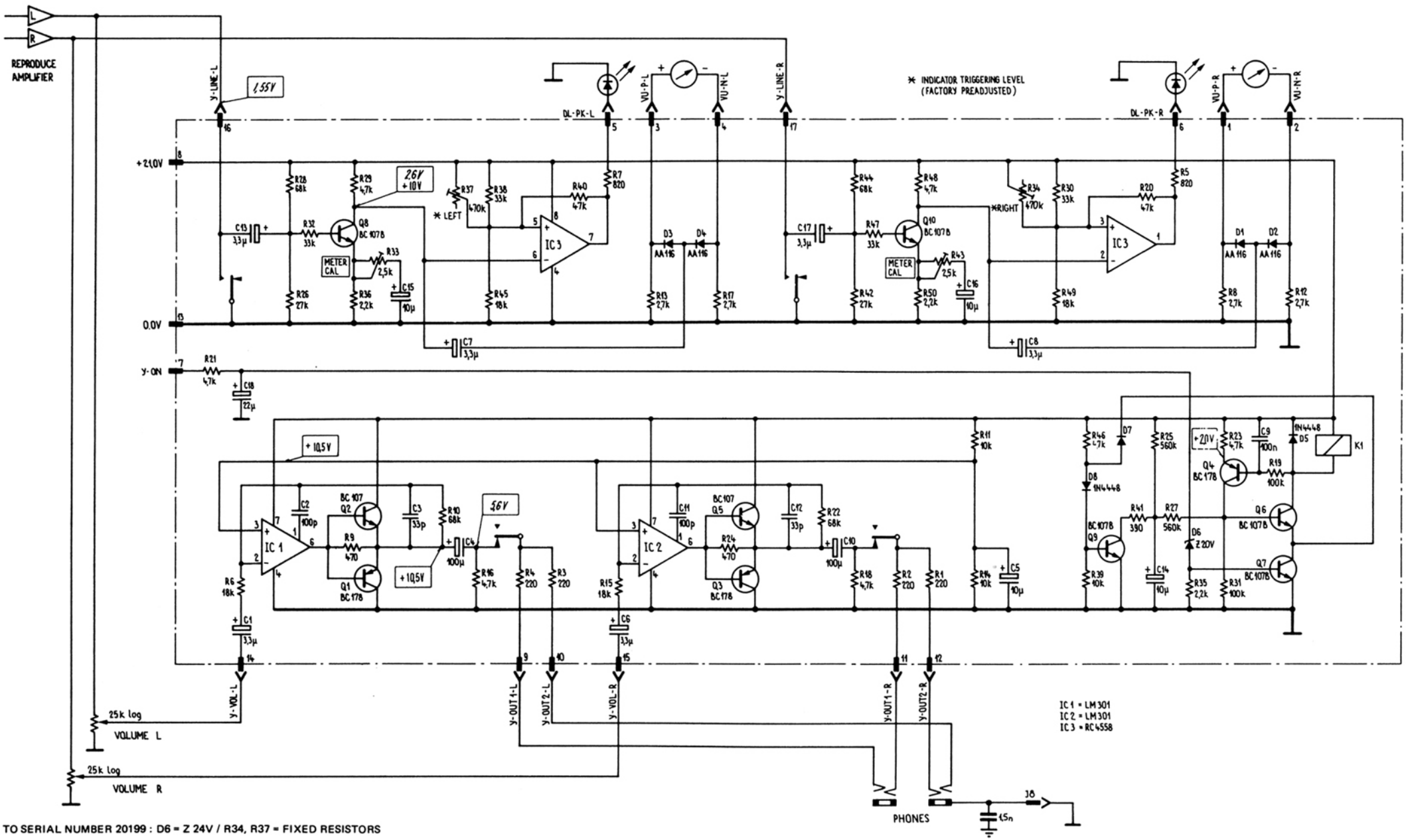

UP TO SERIAL NUMBER 20199 : D6 = Z 24V / R34, R37 = FIXED RESISTORS